# DP2K and DP4K B series

For DP2K and DP4K -19B, -23B, -32B and -P series

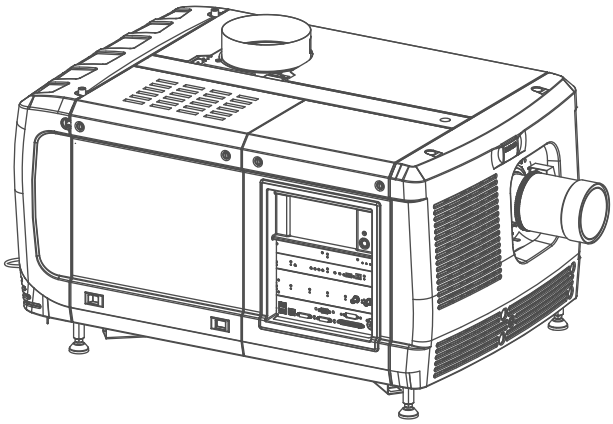

## Service manual

**Barco NV**
Beneluxpark 21, 8500 Kortrijk, Belgium
www.barco.com/en/support
www.barco.com

**Registered office: Barco NV**
President Kennedypark 35, 8500 Kortrijk, Belgium
www.barco.com/en/support
www.barco.com

## Changes

Barco provides this manual 'as is' without warranty of any kind, either expressed or implied, including but not limited to the implied warranties or merchantability and fitness for a particular purpose. Barco may make improvements and/or changes to the product(s) and/or the program(s) described in this publication at any time without notice.

This publication could contain technical inaccuracies or typographical errors. Changes are periodically made to the information in this publication; these changes are incorporated in new editions of this publication.

The latest edition of Barco manuals can be downloaded from the Barco web site *www.barco.com* or from the secured Barco web site *https://www.barco.com/en/signin*.

## Copyright ©

All rights reserved. No part of this document may be copied, reproduced or translated. It shall not otherwise be recorded, transmitted or stored in a retrieval system without the prior written consent of Barco.

## Patent protection

Please refer to *www.barco.com/about-barco/legal/patents*

## Disposal Information

Waste Electrical and Electronic Equipment



This symbol on the product indicates that, under the European Directive 2012/19/EU governing waste from electrical and electronic equipment, this product must not be disposed of with other municipal waste. Please dispose of your waste equipment by handing it over to a designated collection point for the recycling of waste electrical and electronic equipment. To prevent possible harm to the environment or human health from uncontrolled waste disposal, please separate these items from other types of waste and recycle them responsibly to promote the sustainable reuse of material resources.

For more information about recycling of this product, please contact your local city office or your municipal waste disposal service.

For details, please visit the Barco website at: *http://www.barco.com/AboutBarco/weee*

## Disposal of batteries in the product



This product contains batteries covered by the Directive 2006/66/EC which must be collected and disposed of separately from municipal waste.

If the battery contains more than the specified values of lead (Pb), mercury (Hg) or cadmium (Cd), these chemical symbols will appear below the crossed-out wheeled bin symbol.

By participating in separate collection of batteries, you will help to ensure proper disposal and to prevent potential negative effects on the environment and human health.

## Federal Communications Commission (FCC Statement)

This equipment has been tested and found to comply with the limits for a class A digital device, pursuant to Part 15 of the FCC rules. These limits are designed to provide reasonable protection against harmful interference when the equipment is operated in a commercial environment. This equipment generates, uses, and can radiate radio frequency energy and, if not installed and used in accordance with the instruction manual, may cause harmful interference to radio communications. Operation of this equipment in a residential area may cause harmful interference, in which case the user will be responsible for correcting any interference at his own expense

Changes or modifications not expressly approved by the party responsible for compliance could void the user's authority to operate the equipment

FCC responsible: Barco Inc.
3059 Premiere Parkway Suite 400
30097 Duluth GA, United States
Tel: +1 678 475 8000

## EMC notices

**EN55032/CISPR32 Class A MME (MultiMedia Equipment)**

**Warning :** This equipment is compliant with Class A of CISPR 32. In a residential environment this equipment may cause radio interference.

**GB/T 9254 A级ITE(信息技术设备)**

**警告**：此为A级产品。在生活环境中，该产品可能会造成无线电干扰。在这种情况下，可能需要用户对干扰采取切实可行的措施。

**BSMI Taiwan Class A statement:**

**警告使用者 :** 此為甲類資訊技術設備，於居住環境中使用 ，可能會造成射頻擾動，在此情況下，使用者會被要求採取某些適當的對策。

## Guarantee and Compensation

Barco provides a guarantee relating to perfect manufacturing as part of the legally stipulated terms of guarantee. On receipt, the purchaser must immediately inspect all delivered goods for damage incurred during transport, as well as for material and manufacturing faults Barco must be informed immediately in writing of any complaints.

The period of guarantee begins on the date of transfer of risks, in the case of special systems and software on the date of commissioning, at latest 30 days after the transfer of risks. In the event of justified notice of complaint, Barco can repair the fault or provide a replacement at its own discretion within an appropriate period. If this measure proves to be impossible or unsuccessful, the purchaser can demand a reduction in the purchase price or cancellation of the contract. All other claims, in particular those relating to compensation for direct or indirect damage, and also damage attributed to the operation of software as well as to other services provided by Barco, being a component of the system or independent service, will be deemed invalid provided the damage is not proven to be attributed to the absence of properties guaranteed in writing or due to the intent or gross negligence or part of Barco.

If the purchaser or a third party carries out modifications or repairs on goods delivered by Barco, or if the goods are handled incorrectly, in particular if the systems are operated incorrectly or if, after the transfer of risks, the goods are subject to influences not agreed upon in the contract, all guarantee claims of the purchaser will be rendered invalid. Not included in the guarantee coverage are system failures which are attributed to programs or special electronic circuitry provided by the purchaser, e.g. interfaces. Normal wear as well as normal maintenance are not subject to the guarantee provided by Barco either.

The environmental conditions as well as the servicing and maintenance regulations specified in this manual must be complied with by the customer.

## Trademarks

Brand and product names mentioned in this manual may be trademarks, registered trademarks or copyrights of their respective holders. All brand and product names mentioned in this manual serve as comments or examples and are not to be understood as advertising for the products or their manufacturers.

# Table of contents


1 Safety ..... 11
1.1 Safety Instructions ..... 12
1.2 Safety precautions Hazardous Chemicals ..... 15

2 General ..... 17
2.1 Convention projector orientation ..... 18
2.2 Location of the main components of the projector ..... 19
2.3 About the Projector Status Light ..... 23
2.4 Projector block diagrams ..... 24
2.5 Interconnection diagram ..... 27
2.6 Projector power wiring ..... 28
2.7 Spare parts for DP2K and DP4K B series ..... 30

3 Preventative maintenance actions ..... 31
3.1 1 month maintenance actions ..... 32
3.2 Lamp change maintenance actions ..... 33
3.3 3 month maintenance actions ..... 34
3.4 1 year maintenance actions ..... 35
3.5 4 year maintenance actions ..... 39

4 Power Rack ..... 41
4.1 Introduction ..... 42
4.2 Access to the power connection ..... 44
4.3 Power input setup of the DP2K and DP4K-32B ..... 45
4.4 Connecting the DP2K and DP4K-32B with the power net ..... 47
4.5 Connecting the DP2K and DP4K-19B/23B/P with the power net ..... 49
4.6 Power loop through to the projector electronics ..... 51
4.7 Connecting a UPS to the projector electronics ..... 52
4.8 LPS module diagnostic LED's ..... 53
4.9 Removal of an LPS module ..... 56
4.10 Installing an LPS module ..... 58

5 Start Pulse Generator ..... 61
5.1 Introduction ..... 62
5.2 Troubleshooting ..... 63
5.3 Removal of the Start Pulse Generator ..... 64
5.4 Installation of the Start Pulse Generator ..... 66

6 Lamps and Lamp House (manual and motorized track1) ..... 69
6.1 Introduction ..... 71
6.2 Supported xenon lamps for the XL Lamp House ..... 75
6.3 Supported xenon lamps for the S/M Lamp House ..... 77
6.4 Removal of the Lamp House ..... 78
6.5 Removal of the xenon lamp from Lamp House ..... 79
6.6 Removal of the xenon lamp from manual S/M Lamp House ..... 84
6.7 Installation of the xenon lamp in manual XL Lamp House ..... 88
6.8 Installation of the xenon lamp in manual S/M Lamp House ..... 94
6.9 Removal of the xenon lamp from motorized XL Lamp House ..... 99
6.10 Removal of the xenon lamp from motorized S/M Lamp House ..... 104
6.11 Installation of the xenon lamp in motorized XL Lamp House ..... 108
6.12 Installation of the xenon lamp in motorized S/M Lamp House ..... 114
6.13 Installation of the Lamp House ..... 119
6.14 Resetting lamp parameters & lamp alignment ..... 120
6.14.1 Resetting the lamp parameters ..... 120
6.14.2 Automatic lamp alignment motorized lamp house ..... 124
6.14.3 Manual lamp alignment for motorized lamp house ..... 126
6.15 Replacement of the Lamp Info module ..... 127
6.16 Replacement of the UV blocker ..... 131
6.17 Replacement of the Lamp Reflector ..... 135
6.18 Replacement of the Lamp Reflector (second generation) ..... 139
6.19 Realignment of the lamp in its reflector (manual Lamp House) ..... 143
6.20 Replacing a stepper motor of Motorized Lamp House ..... 145
6.21 Lubrication of the XYZ mechanism ..... 148
6.22 Cleaning the UV blocker of the Lamp House ..... 149
6.23 Cleaning the Reflector of the Lamp House ..... 150

7 Lamps and Lamp House (motorized track2) ..... 151
7.1 Introduction ..... 153
7.2 Removal of the Lamp House ..... 156
7.3 Removal of the xenon lamp from motorized S/M Lamp House ..... 157
7.4 Removal of the xenon lamp from motorized XL Lamp House ..... 161
7.5 Installation of the xenon lamp in motorized S/M Lamp House ..... 166
7.6 Installation of the xenon lamp in motorized XL Lamp House ..... 171
7.7 Installation of the Lamp House ..... 177
7.8 Resetting the lamp parameters & lamp alignment ..... 179
7.9 Replacement of the Lamp Info module ..... 180
7.10 Replacement of the UV blocker ..... 182
7.11 Replacement of the Lamp Reflector ..... 186
7.12 Lubrication of the XYZ mechanism ..... 190
7.13 Replacing a stepper motor ..... 192
7.14 Cleaning the UV blocker and the reflector ..... 195

8 Cold Mirror ..... 197
8.1 Introduction ..... 198
8.2 Replacement of the Cold Mirror assembly ..... 199
8.3 Replace the Cold Mirror ..... 202
8.4 Adjusting the Cold Mirror ..... 205
8.5 Cleaning the Cold Mirror ..... 209

9 Integration Rod ..... 211
9.1 Introduction ..... 212
9.2 Integration Rod diagnostic (First generation Light Pipe) ..... 214

9.3 Integration Rod diagnostic (Second generation Light Pipe) ... 215
9.4 Removal of the Integration Rod assembly (First generation Light Pipe) ... 216
9.5 Installing a new Integration Rod assembly (First generation Light Pipe) ... 217
9.6 Adjusting the Integration Rod (First generation Light Pipe) ... 219
9.7 Adjusting the Integration Rod (Second generation Light Pipe) ... 221

10 Sealed Light Processor assembly ... 225
10.1 Introduction ... 227
10.2 Diagnostics ... 230
10.3 Open the sealed compartment ... 231
10.4 Remove light processor top cover ... 233
10.5 Electrical disconnection ... 234
10.6 Light processor assembly removal ... 236
10.7 4K Lens and Aperture replacement (Second generation Light Pipe) ... 239
10.8 Installation of the light processor assembly ... 242
10.9 Electrical connections ... 246
10.10 Input and Communication top cover ... 248
10.11 Convergence controls ... 249
10.12 Red on blue convergence ... 251
10.13 Green on blue convergence ... 252
10.14 Mount light processor top cover ... 253
10.15 Close the sealed compartment ... 254
10.16 Adjusting the Fold Mirror (First generation Light Pipe) ... 255
10.17 Adjusting the Fold Mirror (Second generation Light Pipe) ... 257
10.18 Adjusting the Light Pipe Zoom Lens (First generation Light Pipe) ... 259
10.19 Adjusting the Light Pipe Zoom Lens (Second generation Light Pipe) ... 260
10.20 Adjusting the Notch Filter (First generation Light Pipe) ... 261
10.21 Adjusting the Notch Filter (Second generation Light Pipe) ... 263
10.22 Cleaning the Notch Filter ... 265
10.23 Cleaning the Prism exit side ... 266
10.24 Replacement of the Light Sensor Module (First generation Light Pipe) ... 267
10.25 Replacement of the Light Sensor Module (Second generation Light Pipe) ... 268
10.26 Replacement of the Notch Filter (First generation Light Pipe) ... 269
10.27 Replacement of the Notch Filter (Second generation Light Pipe) ... 271
10.28 Replacement of the Dowser (Shutter) ... 272

11 Spatial Color Calibration (LUT-SCC) ... 273
11.1 Introduction to SCC file ... 274
11.2 Obtain the Serial Number of the installed Light Processor ... 275
11.3 Download the LUT-SCC file from the Barco website ... 276
11.4 Upload Spatial Color Calibration file ... 278
11.5 Activate Spatial Color Calibration file ... 279

12 Liquid Cooling Circuit ... 281
12.1 Introduction ... 283
12.2 Diagnostic ... 285
12.3 Draining the liquid cooling circuit ... 287
12.4 Filling the liquid cooling circuit ... 290
12.5 Removal of the Liquid Cooling assembly ... 291
12.6 Installation of the Liquid Cooling assembly ... 294
12.7 Replacement of the Pump (RD to RD) ... 297
12.8 Replacement of the complete cooling pump with a new model (RD to NRD) ... 299
12.9 Replacement of the pump (NRD to NRD) ... 303
12.10 Replacement of the Heat Exchanger ... 305

13 Lenses and Lens Holder ..... 307
13.1 Introduction ..... 308
13.2 Available lenses ..... 309
13.3 Lens Calculator ..... 311
13.4 Lens installation ..... 312
13.5 Lens removal ..... 315
13.6 Lens shift, zoom & focus ..... 316
13.7 Back Focal Length adjustment ..... 318
13.8 Scheimpflug adjustment ..... 322
13.9 Fixation of the Lens Holder front plate ..... 326
13.10 Cleaning the lens ..... 328
13.11 Removal of the Lens Holder ..... 329
13.12 Installation of the Lens Holder ..... 332
13.13 Replacement of the Vertical Shift stepper motor ..... 335
13.14 Replacement of the Horizontal Shift stepper motor ..... 338
13.15 Replacement of the Focus stepper motor ..... 341
13.16 Replacement of the Focus stepper motor Driver board ..... 343
13.17 First Placement of the Inner Dust Rubber ..... 344
13.18 Replacement of the Inner Dust Rubber ..... 347

14 Card Cage ..... 349
14.1 Introduction ..... 350
14.2 Fan controller board ..... 351
14.3 Integrated Cinema Processor (ICP) ..... 352
14.4 ICP-D (Integrated Cinema Processor – Direct) ..... 353
14.5 HD-SDI board + link decryptor ..... 355
14.6 Quad 3G/SDI input board ..... 356
14.7 Cinema controller board ..... 357
14.8 Switch Mode Power Supply (SMPS) ..... 359
14.9 Replacement of a Card Cage board ..... 360
14.10 Replacement of the RTC battery of the ICP board ..... 362
14.11 Battery replacement on the Cinema Controller Board ..... 364
14.12 Replacement of the Link Decryptor ..... 366
14.13 Replacement of the SMPS board ..... 368
14.14 Removal of the Button assembly ..... 370
14.15 Installation of the Button assembly ..... 373
14.16 Replacement of the Button module (first generation Keypad) ..... 376
14.17 Replacement of the Keypad (first generation Keypad) ..... 379
14.18 Replacement of the Keypad assembly (second generation Keypad) ..... 383
14.19 Replacement of the signal back plane ..... 384
14.20 Replacement of the Status Light ..... 397
14.21 Authorization to clear security warning on the projector ..... 398

15 Software update via Communicator (DC update companion) ..... 399
15.1 Software upgrade, launch DC update companion ..... 400
15.2 Software upgrade, projector, ICMP or touch panel ..... 403
15.3 ICP software upgrade ..... 407
15.4 Link decryptor software update ..... 410
15.5 Update logging ..... 413

16 Communicator Touch Panel ..... 415
16.1 Communicator Touch Panel ..... 416
16.2 Installing the Touch Panel interface ..... 418
16.3 Reposition the Touch Panel interface ..... 420

17 Fan replacement procedures ..... 421
17.1 Replacement of the Card Cage fans ..... 422
17.2 Replacement of the Light Processor fan ..... 424
17.3 Replacement of the Formatter fan(s) ..... 427
17.4 Replacement of the Heat Exchanger fans ..... 429
17.5 Replacement of the SPG/Cold Mirror fan ..... 430
17.6 Replacement of the Anode fan ..... 433
17.7 Replacement of the Anode fan with plastic housing (MK2) ..... 435
17.8 Replacement of the Cathode fan ..... 438
17.9 Replacement of the ICP fan ..... 440

18 Trouble shooting ..... 441
18.1 Trouble shooting checklist ..... 442
18.2 Log files ..... 549

A Projector cleaning procedure ..... 553
A.1 Purpose ..... 554
A.2 Necessary tools, products and tips ..... 555
A.3 Optical path ..... 556
A.3.1 Cleaning order ..... 556
A.3.2 Cleaning procedure ..... 557
A.4 Non optical components ..... 564
A.4.1 Card cage ..... 564
A.4.2 SPG fan assembly ..... 566
A.4.3 Pump assembly ..... 567
A.4.4 Power connection and Lamp power supply ..... 568
A.4.5 External covers ..... 569
A.4.6 Dust filters ..... 570

B Dust filter maintenance ..... 573
B.1 Remove and clean the front dust filter ..... 574
B.2 Remove and clean both bottom dust filters ..... 576
B.3 Cleaning the exterior of the projector ..... 577

C Removal and installation of the projector covers ..... 579
C.1 Removal of the lamp cover ..... 581
C.2 Removal of the rear cover ..... 583
C.3 Removal of the input cover ..... 584
C.4 Removal of the front cover ..... 586
C.5 Removal of the side cover ..... 588
C.6 Installation of the front cover ..... 590
C.7 Installation of the input cover ..... 592
C.8 Installation of the lamp cover ..... 593
C.9 Installation of the rear cover ..... 595
C.10 Installation of the side cover ..... 596

D Pin configurations ..... 597
D.1 About General Purpose Inputs & Outputs (GPIO) ..... 598
D.2 Pin configurations of the communication ports ..... 600
D.3 Pin configurations of the inputs ..... 602

E Input formats ..... 603
E.1 Input formats ..... 604

Glossary ..... 607
List of tools ..... 609
Index ..... 611

# 1 Safety

1.1 Safety Instructions ..... 12
1.2 Safety precautions Hazardous Chemicals ..... 15

## About this chapter

Read this chapter attentively. It contains important information to prevent personal injury while servicing the DP2K and DP4K B series projector. Furthermore, it includes several cautions to prevent damage to the DP2K and DP4K B series projector. Ensure that you understand and follow all safety guidelines, safety instructions and warnings mentioned in this chapter before servicing the DP2K and DP4K B series projector. After this chapter, additional “warnings” and “cautions” are given depending on the service procedure. Read and follow these “warnings” and “cautions” as well.

**WARNING:** This manual is only intended for qualified service personnel.

# 1.1 Safety Instructions

**WARNING:** Before removing/replacing any projector components, disconnect the power to the unit mains terminals and unplug the power cord at UPS INLET.

## Safety Instructions

1. Before returning an instrument to the customer, always make a safety check of the entire instrument, including, but not limited to, the following items:
   a) Be sure that no built-in protective devices are defective and/or have been defeated during servicing. (1) Protective shields are provided on this chassis to protect both the technician and the customer. Correctly replace all missing protective shields, including any removed for servicing convenience. (2) When reinstalling the chassis and/or other assembly in the cabinet, be sure to put back in place all protective devices, including, but not limited to, insulating materials, barriers, covers/shields, and isolation resistor/capacitor networks. Do not operate this instrument or permit it to be operated without all protective devices correctly installed and functioning. Service people who defeat safety features or fail to perform safety checks may be liable for any resulting damage.
   b) Be sure that there are no cabinet openings through which an adult or child might be able to insert their fingers and contact a hazardous voltage. Such openings include, but are not limited to, (1) excessively wide cabinet ventilation slots, and (2) an improperly fitted and/or incorrectly secured cover panels.
   c) Leakage Current Hot Check. With the instrument completely reassembled, plug the AC line cord directly into a 220 V AC outlet (Do not use an isolation transformer during this test). Use a leakage current tester or a metering system that is designed to comply with the new IEC, ANSI and UL standards. With the instrument AC switch first in the on position and then in the off position, measure from a known earth ground (metal waterpipe, conduit, etc.) to all exposed metal parts of the instrument (antennas, handle bracket, metal cabinet, screwheads, metallic overlays, control shafts, etc.). especially any exposed metal parts that offer an electrical return path to the chassis. Any current measured must not exceed 3,5 mA. Reverse the instrument power cord plug in the outlet and repeat test. ANY MEASUREMENTS NOT WITHIN THE LIMITS SPECIFIED HEREIN INDICATE A POTENTIAL SHOCK HAZARD THAT MUST BE ELIMINATED BEFORE RETURNING THE INSTRUMENT TO THE CUSTOMER OR BEFORE CONNECTING ACCESSORIES.

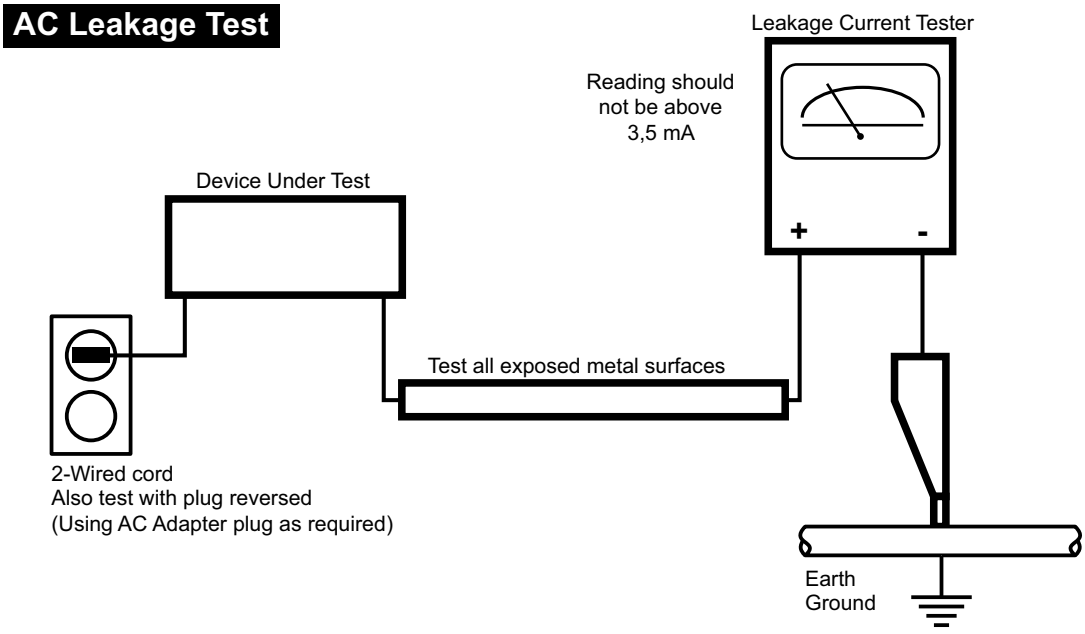


Image 1–1

   d) Ultraviolet Radiation exposure - Warning: This lamp can cause serious skin burn and eye inflammation from shortwave ultraviolet radiation if not operated in enclosed fixtures. DO NOT operate this lamp in a fixture with a missing or broken lens cover.
   e) Ozone: Operating lamp generates ozone gas which is harmful to the respiratory system. Therefore the lamp should be operated in adequately ventilated equipment.

2. Read and comply with all caution and safety-related notes on or inside the projector cabinet or on the projector chassis, or on the picture tube.
3. Design Alteration Warning - Do not alter or add to the mechanical or electrical design of this apparatus. Design alterations and additions, including, but not limited to, circuit modifications and the addition of items such as auxiliary audio and/or video output connections, might alter the safety characteristics of this apparatus and create a hazard to the user. Any design alterations or additions may void the manufacturer's warranty and may make you, the servicer responsible for personal injury or property damage resulting therefrom.
4. Lamp explosion Protection Warning – The lamp in this projector operates with a high internal pressure and there is a slight risk that the lamp may explode, particularly if it is used beyond its rated life. Do not remove, install, or otherwise handle the lamp in any manner without first putting on shatterproof goggles equipped with side shields. People not so equipped must be kept safely away while lamps are handled. Keep the lamp away from your body. For continued explosion protection, replace the lamp only with one of the same type number. Always replace the lamp before the rated life time.
5. Hot Chassis Warning - This projector chassis has two ground systems: the primary ground system is formed by the negative voltage of the rectified mains (power) and is only used as a reference in primary circuits; the secondary ground system is connected to earth ground via the earth conductor in the mains (power) lead. Separation between primary and secondary circuits is performed by the safety isolation transformers. Components bridging these transformers are also safety components and must never be defeated or altercated. All user-accessible conductive parts must be connected to earth ground, or are kept at SELV (Safety Extra Low Voltage).
6. Observe original lead dress. Always inspect in all areas for pinched, out-of-face, or frayed wiring. Do not change spacing between components, and between components and the printed-circuit board. Check AC power cord for damage. Take extra care to assure correct lead dress in the following areas:
   a) near sharp edges
   b) near thermally hot parts - be sure that leads and components do not touch thermally hot parts
   c) the AC supply
   d) high voltage
7. Components, parts, and/or wiring that appear to have overheated or are otherwise damaged should be replaced with components, parts, or wiring that meet original specifications. Additionally, determine the cause of overheating and/or damage and, if necessary, take corrective action to remove any potential safety hazard.
8. PRODUCT SAFETY NOTICE - Many electrical and mechanical parts have special safety-related characteristics some of which are often not evident from visual inspection, nor can the protection they give necessarily be obtained by replacing them with components rated for higher voltage, wattage, etc. Use of a substitute replacement that does not have the same safety characteristics as the recommended replacement part in BARCO service data parts list might create shock, fire, and/or other hazards. Product Safety is under review continuously and new instructions are issued whenever appropriate. For the latest information, always consult the appropriate current BARCO service literature.
9. Do not spray chemical on or near this instrument or any of its assemblies.
10. Electrostatically Sensitive (ES) Devices Some semiconductor (solid state) devices can be damaged easily by static electricity. Such components commonly are called Electrostatically Sensitive (ES) Devices. Examples of typical ES devices are integrated circuits and some field-effect transistors and semiconductor "chip" components. The following techniques should be used to help reduce the incidence of component damage caused by static electricity:
    a) Immediately before handling any semiconductor-equipped assembly, drain off any electrostatic charge on your body by touching a known earth ground. Wear a commercially available high impedance discharging wrist strap device.
    b) After removing an electrical assembly equipped with ES devices, place the assembly on a static dissipative surface such as a 3M No 8210 table mat, to prevent electrostatic charge buildup or exposure of the assembly.
    c) Do not use freon-propelled chemicals. These can generate electrical charges sufficient to damage ES devices.
    d) Do not remove a replacement ES device from its protective package until immediately before you are ready to install it (Most replacement ES devices are packaged with leads electrically shorted together by conductive foam, aluminium foil or comparable conductive material).
    e) Immediately before removing the protective material from the leads of a replacement ES device, touch the protective material to the chassis or circuit assembly into which the device will be installed. CAUTION: Be sure no power is applied to the chassis or circuit, and observe all other safety precautions.

f) Minimize bodily motions when handling unpacked replacement ES devices (Otherwise harmless motion such as the brushing together of your clothes fabric or the lifting of your foot from a carpeted floor can generate static electricity sufficient to damage an ES device).

# 1.2 Safety precautions Hazardous Chemicals

## Cooling liquid: Pale yellow antifreeze Antifrogen® N



Handling the cooling liquid:

- Not for household use.
- Keep out of reach of children.
- Harmful by oral intake.
- Avoid exposure to pregnant women.
- Avoid contact of the liquid with Eyes, Skin and Clothing.
- Avoid inhaling noxious fumes.
- Conserve the product in the original package and in a well ventilated room.

Personal protection rules:

- Handle the cooling liquid in a well ventilated room.
- Under no circumstances eat, drink and smoke while handling the liquid.
- Wear gloves (Butyl rubber, PVC....) and goggles.
- Wear suitable protection clothing.

## Cleansing agent: sodium carbonate crystals ($Na_2CO_3$)



Handling the cleansing agent:

- Conserve the product in the original container in a cool, well ventilated place.
- Keep away from Incompatible materials: sources of ignition, direct sunlight.
- Keep container closed when not in use.
- After handling: Wash hands and other exposed areas with mild soap and water.

Personal protection rules:

- Handle the cleansing agent in a well ventilated area.
- Do not eat, drink or smoke during use.
- Wear gloves (Butyl rubber, PVC....) and goggles.
- Wear suitable protection clothing.

**WARNING:** Before handling Hazardous Chemicals ensure that you have read and understood the safety instructions provided by the supplier of the chemical in the Safety Data Sheet.

## Safety Data Sheets for Hazardous Chemicals

For safe handling information on chemical products, consult the Safety Data Sheet (SDS). SDSs are available upon request via safetydatasheets@barco.com.

# General 2

2.1 Convention projector orientation ..... 18
2.2 Location of the main components of the projector ..... 19
2.3 About the Projector Status Light ..... 23
2.4 Projector block diagrams ..... 24
2.5 Interconnection diagram ..... 27
2.6 Projector power wiring ..... 28
2.7 Spare parts for DP2K and DP4K B series ..... 30

## About this chapter

This chapter contains some general information on projector level such as the location of the main components, internal wiring diagram, spare parts list, etc.

# 2.1 Convention projector orientation

## Convention

This manual refers to the left side of the projector as the side at your left hand when standing behind the projector and looking at the projection screen in front of the projector.

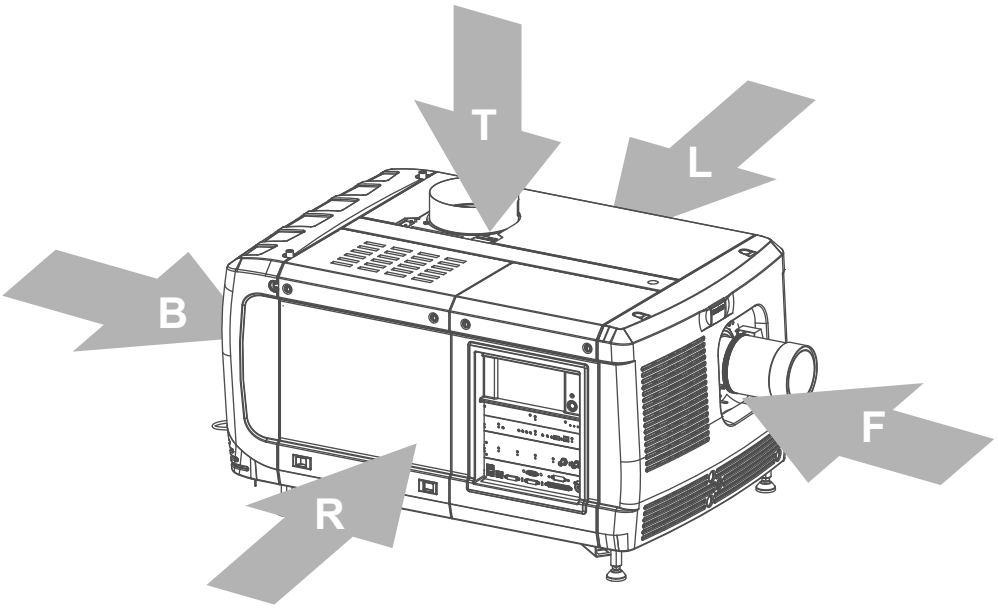


Image 2–1

**T** Top of the projector.
**L** Left side of the projector (Light Processor side).
**F** Front of the projector.
**R** Right side of the projector (Lamp side & Input side).
**B** Back side of the projector.

# 2.2 Location of the main components of the projector

## Housing and air inlet filters

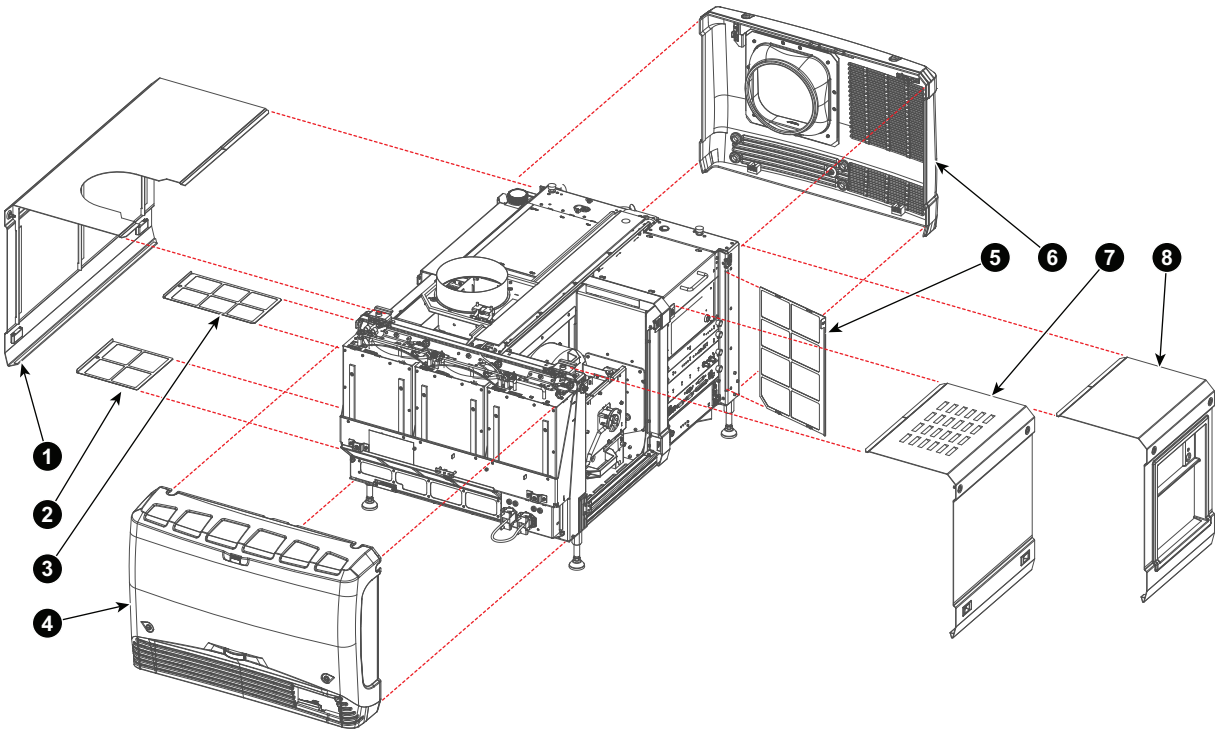


Image 2–2

1 Left side cover (Light Processor side).
2 SPG/Cold Mirror air inlet filter.
3 Heat Exchanger air inlet filter.
4 Rear cover.
5 Card Cage air inlet filter.
6 Front cover.
7 Lamp cover.
8 Input cover (Card Cage cover).

## Main internal components

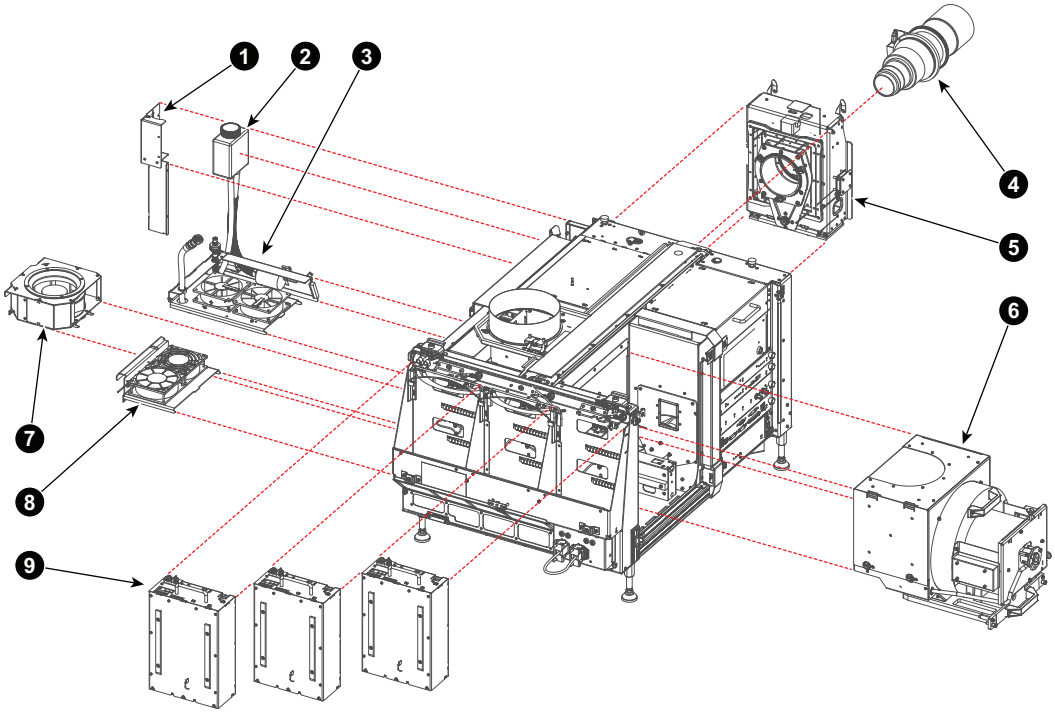


Image 2–3

1 Cover reservoir liquid cooling.
2 Reservoir liquid cooling.
3 Liquid cooling assembly (Fans + Heat Exchanger)
4 Projection lens.
5 Lens Holder.
6 Lamp House.
7 Fan Anode cooling.
8 Fan assembly for SPG and Cold Mirror.
9 Lamp Power Supply (LPS) units.

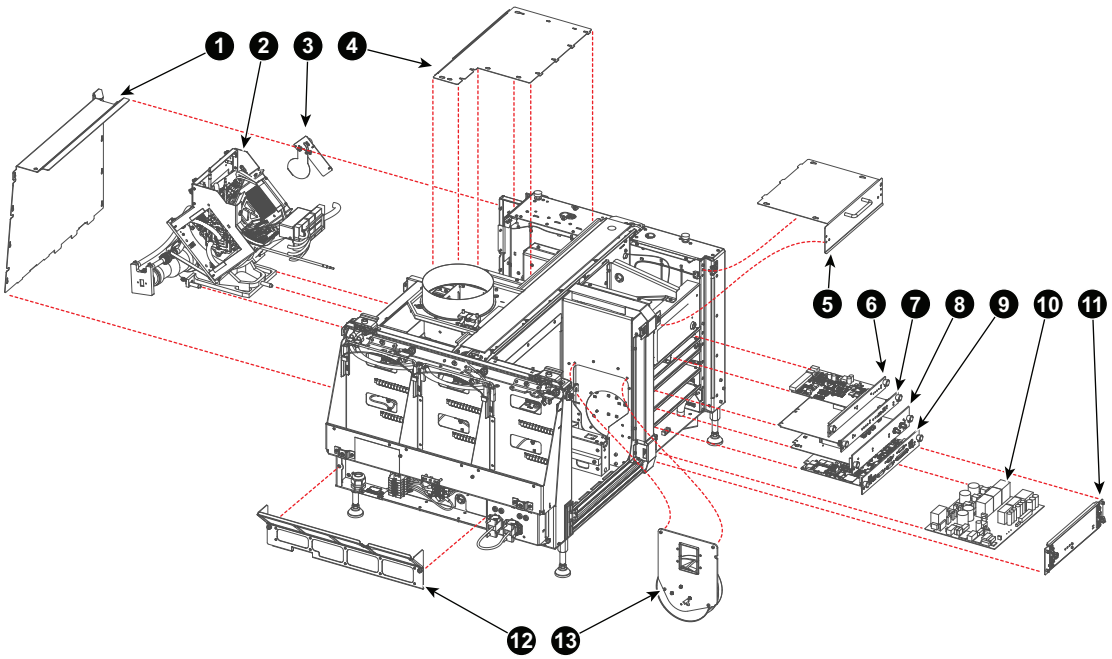


Image 2–4

1 Cover plate Light Processor compartment.
2 Light Processor.
3 Dowser (Shutter).
4 Top cover plate Light Processor compartment.
5 Top cover plate Card Cage.
6 Fan Control Board.
7 Integrated Cinema Processor board (ICP).
8 HDSDI board.
9 Cinema Controller board.
10 Switch Mode Power Supply (SMPS) board.
11 Cover plate SMPS compartment in Card Cage.
12 Cover plate mains input.
13 Anode Fan assembly.

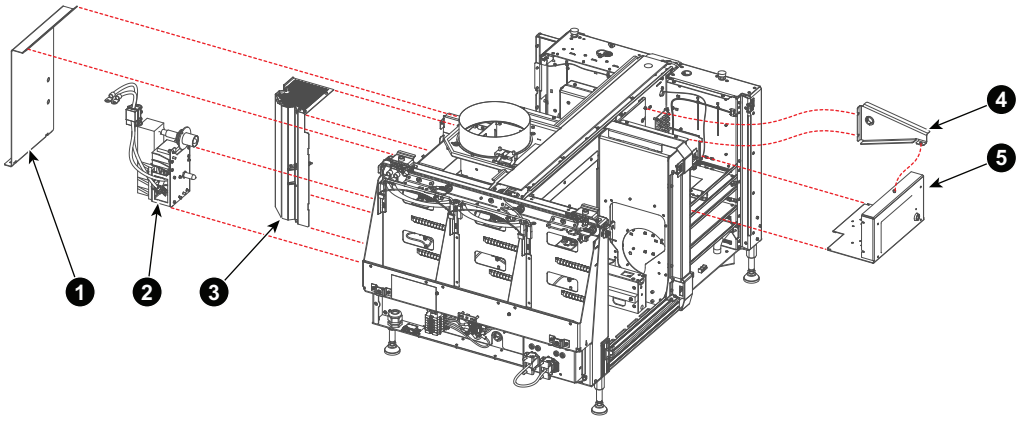


Image 2–5

1 Cover plate SPG and Cold Mirror compartment.
2 Start Pulse Generator (SPG) unit.
3 Cold Mirror assembly.
4 Support bracket for Button assembly.
5 Button assembly.

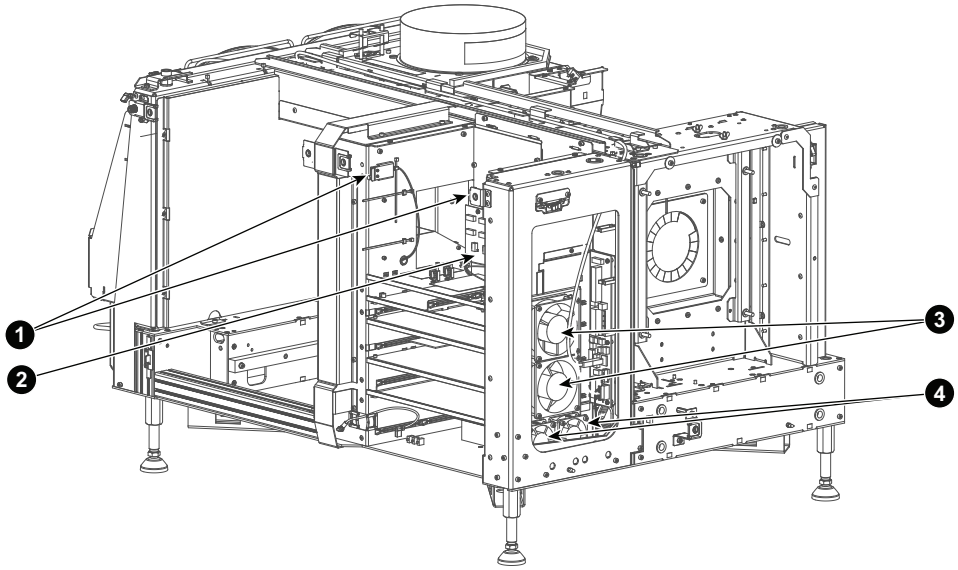


Image 2–6

1 Security switches Card Cage.
2 Signal Backplane.
3 Fans for Card Cage.
4 Fans for SMPS compartment.

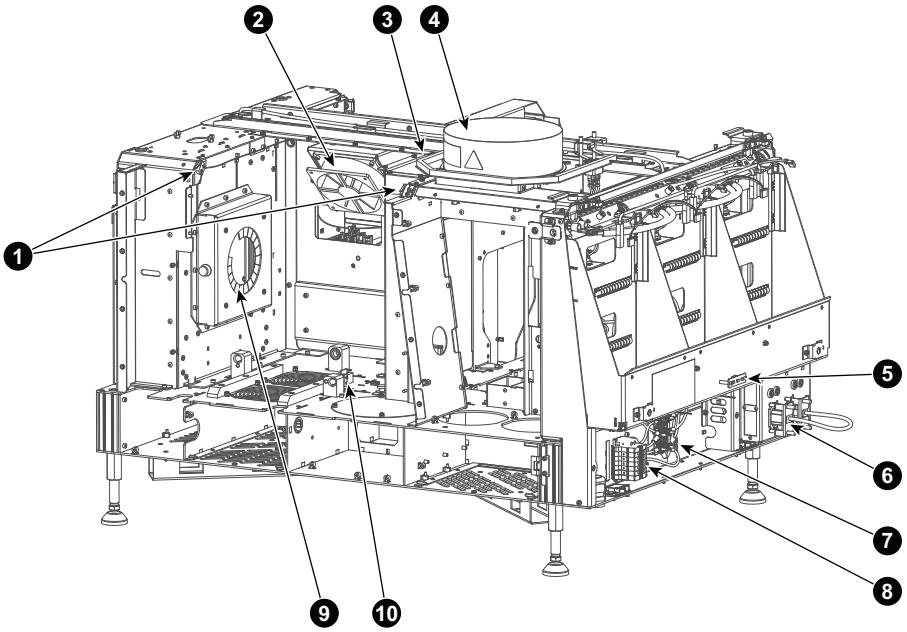


Image 2–7

1 Security switches for Light Processor compartment.
2 Fan for Light Processor cooling.
3 Air flow switch.
4 Temperature sensor air outlet from Lamp House compartment.
5 Status light.
6 UPS connections.
7 Star-Delta switch board (240V/400V).
8 Power input distribution strip.
9 EMC shield lens hole.
10 Detection switch Light Processor.

# 2.3 About the Projector Status Light

## Overview

The projector status light can have 4 colors:

| | |
|---|---|
| **Flashing green** | Projector is booting up. |
| **Green** | Projector is running normal. |
| **Yellow** | Projector is running with warnings. Event can go on but a technical intervention will be necessary in the near future to prevent a complete stop of the projector. |
| **Red** | Projector is in error state. Problem could prevent normal operation. Solve the problem before continuing with the projector. |
| **Blue** | Projector runs in notification state. Maintenance action required. Lamp run time is exceeded. New lamp must be installed. |

# 2.4 Projector block diagrams

## General block diagram

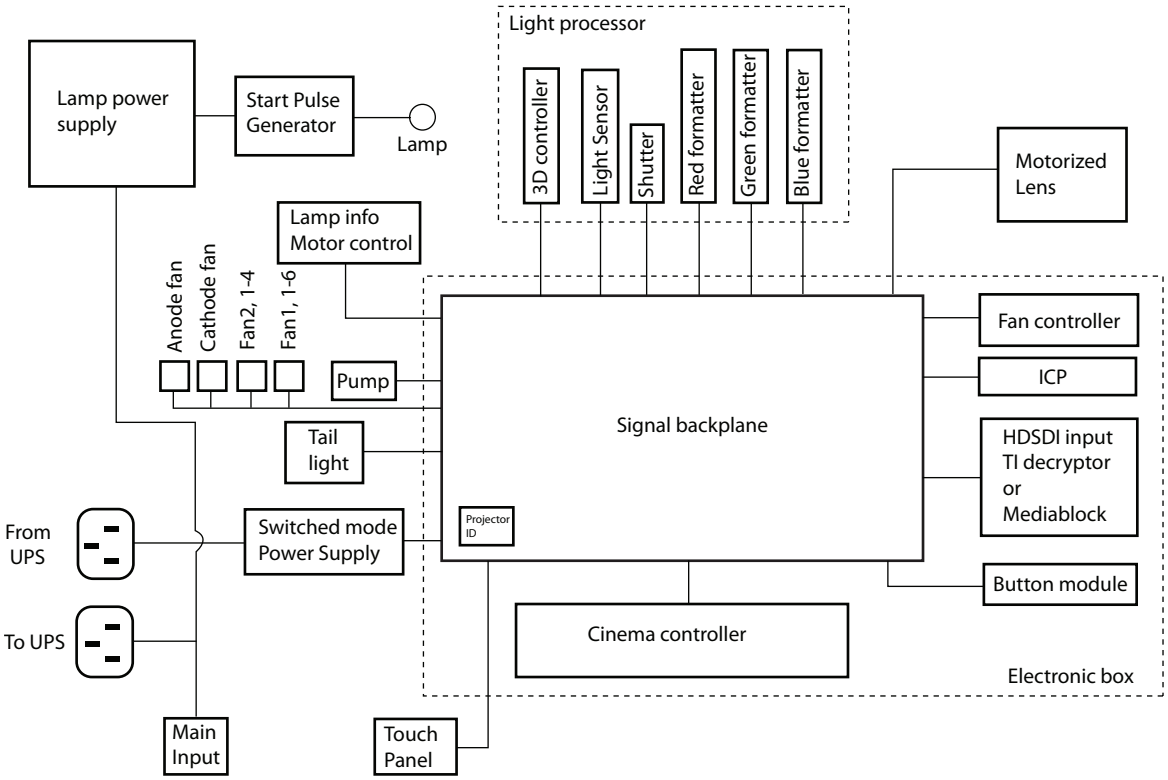


Image 2–8

## Communication block diagram

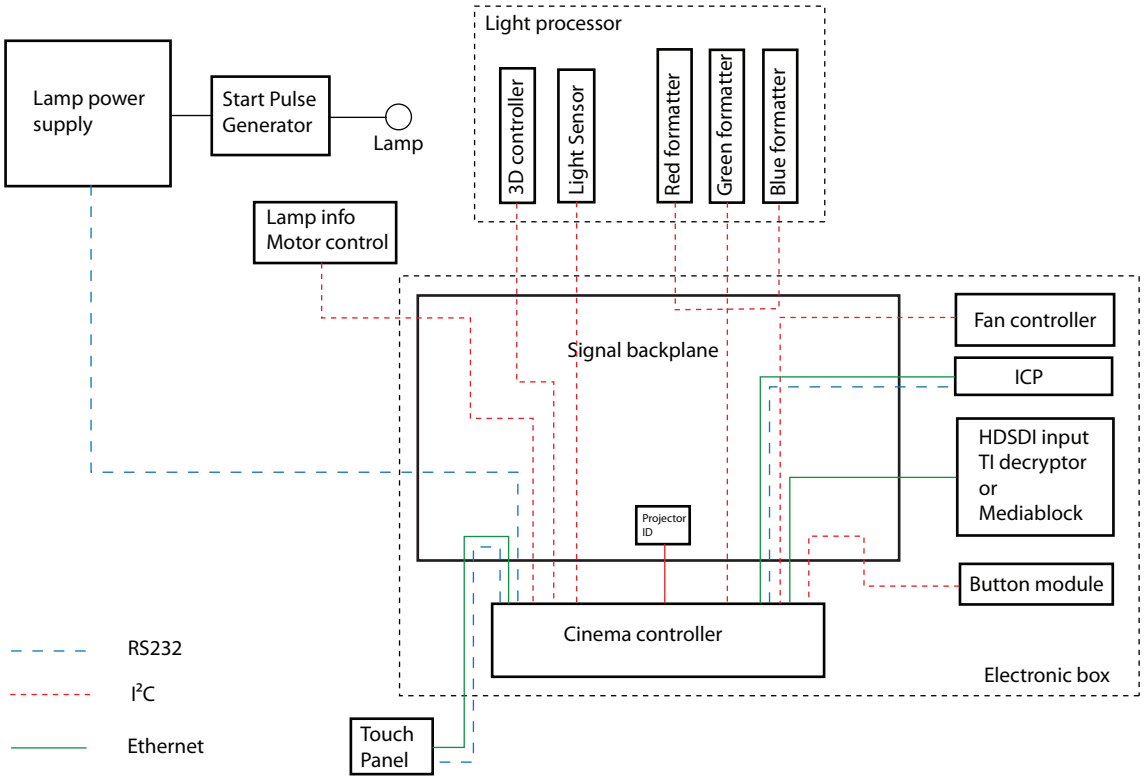


Image 2–9

- Any external command sent via Ethernet or serial will always be routed through the Cinema Controller to the Signal Backplane and then on to the end device
- Cinema Controller contains a multi port internal Ethernet router, connected to all internal Ethernet devices.
- Once the Cinema Controller receives the command, it will convert it into the necessary protocol to control the end device.
- TI controls its own devices with commands to perform functions coming from the Cinema controller or from cinema server/IMediablock.
- Decryption is handled by the Link decryptor or Mediablock.
- I²C communication between Fan Controller and Cinema Controller is used by the Fan Controller to send back error reporting to Cinema Controller
- Cinema Controller receives error reporting and sends it to the Communicator and the log files.

## Video block diagram

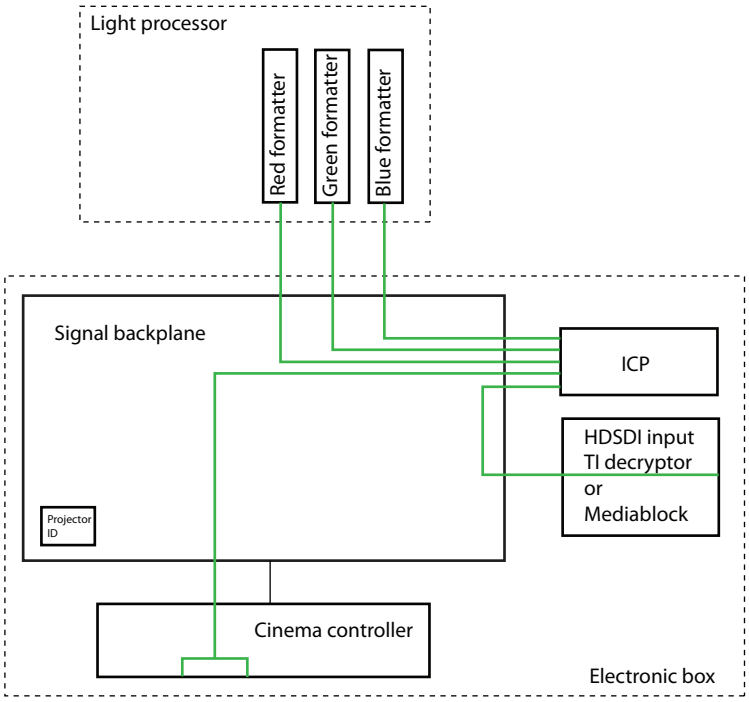


Image 2–10

The following steps happen :

- If decryption link is present; video is sent from server via HDSDI cables to the projector HDSDI board (or PCI express cable if media block is inserted).
- Video is decrypted on the Link decryptor board or Media Block and then sent to the Signal Backplane
- Video signal is sent to Integrated Cinema Processor
- ICP Board adds scaling, subtitle overlay, image cropping & applies all color correction. Also divides video signal into Red, Green and Blue signals.
- Formatter applies any 3D frame rate multiplication if needed and turns signal into pulses to drive or cycle DMD mirrors.
- DMD’s are reflecting the light provided by the prism back to the prism and reflect it through the lens towards the screen.

# 2.5 Interconnection diagram

## Overview

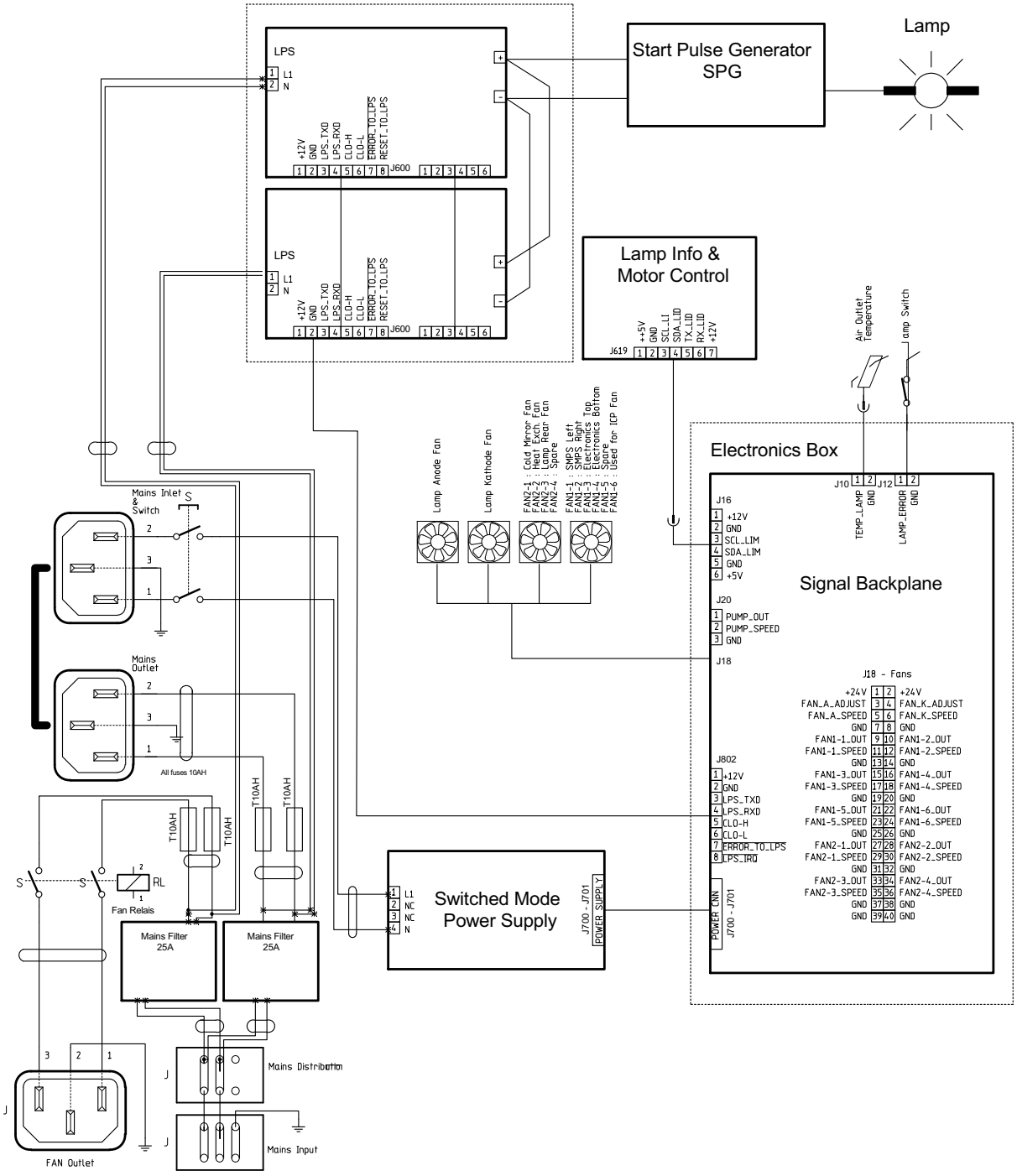


Image 2–11

# 2.6 Projector power wiring

## Power wiring DP2K and DP4K-19B/23B/P

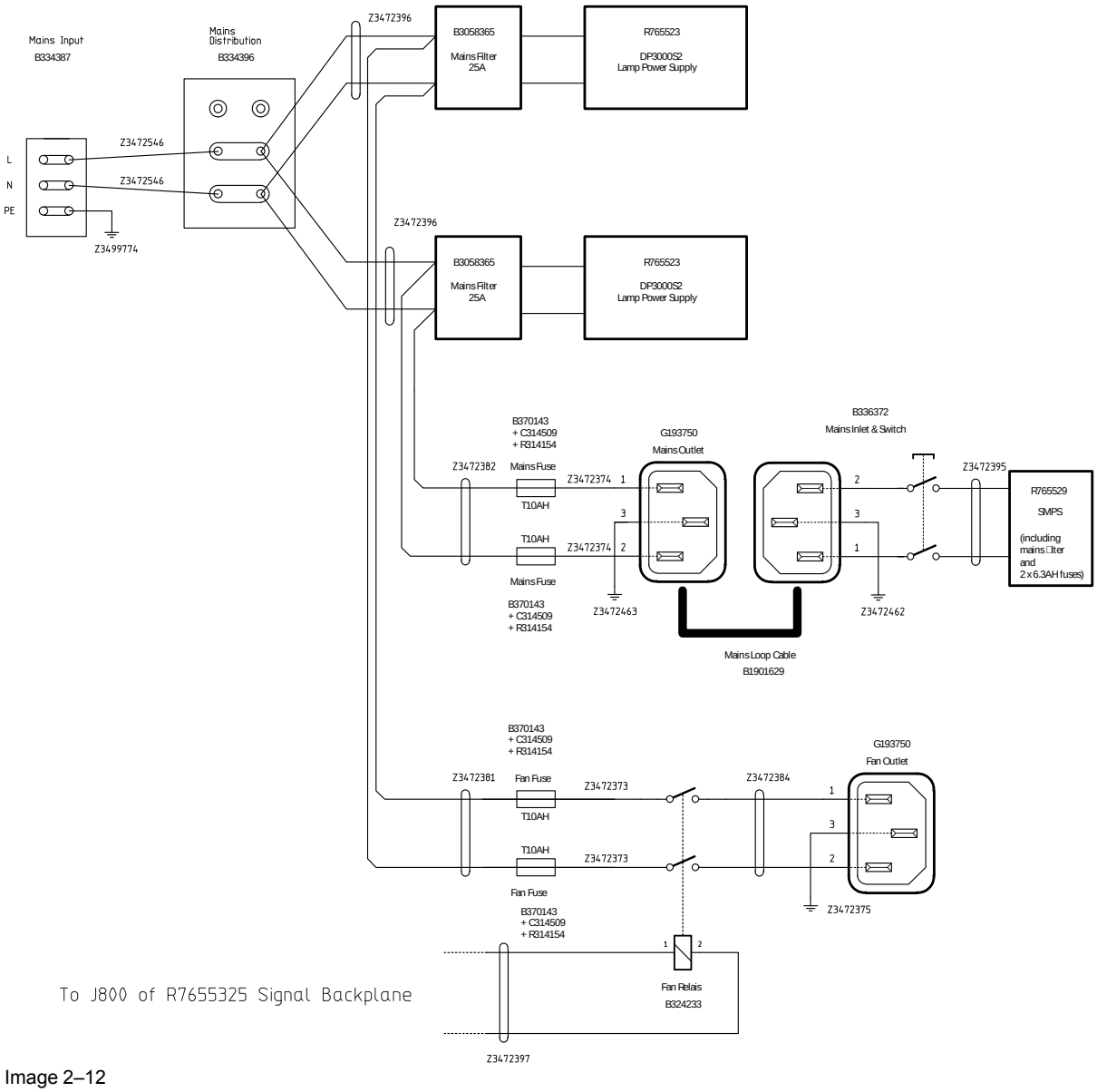


Image 2–12

## Power wiring DP2K and DP4K-32B

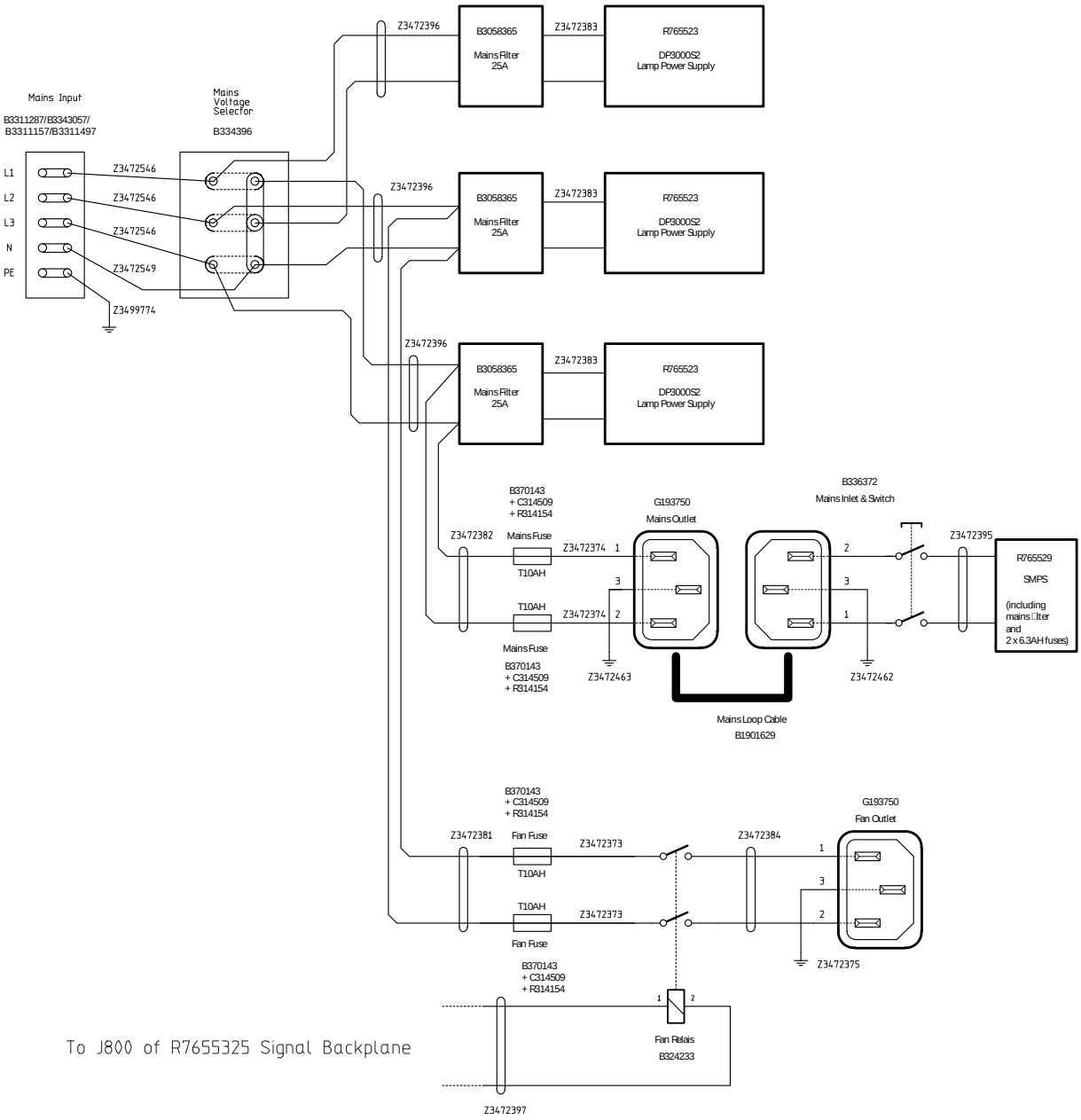


Image 2–13

# 2.7 Spare parts for DP2K and DP4K B series

## Up to date information regarding spare parts for DP2K and DP4K B series

Barco continuously improves its service procedures for the customer. Managing spare parts is one of the key processes. The spare parts list is subject to change. No spare parts list is included in this manual to ensure that no spare parts are ordered based upon outdated information. Up to date information regarding spare parts, and much more, is available on Barco's web site http://www.barco.com. Go to *myBarco log in* and enter your credentials. Select your market and product and click on the product page on *Technical support*. The *Spare parts* tab becomes available.

# Preventative maintenance actions

# 3


3.1 1 month maintenance actions ..... 32
3.2 Lamp change maintenance actions ..... 33
3.3 3 month maintenance actions ..... 34
3.4 1 year maintenance actions ..... 35
3.5 4 year maintenance actions ..... 39


## Maintenance program

The maintenance program is subdivided in time frames going from monthly maintenance actions which can be done by a trained projectionist to annually and 4 yearly maintenance actions which must be done by certified service personnel who are familiar with potential hazards of the product and all product safety checks.

# 3.1 1 month maintenance actions

## MAINTENANCE TYPE A (perform every month)

The 1 month maintenance actions, listed below, may be performed by a trained projectionist who is familiar with potential hazards associated with the product.

| No. | Maintenance action | Remarks |
|---|---|---|
| 1 | Clean all three dust filters of the projector:<br>• Metal mesh filter of the Card Cage (front side of projector)<br>• Metal mesh filter of the Heat Exchanger (bottom front of projector)<br>• Metal mesh filter of the Cold Mirror + SPG unit (bottom rear of projector) | Use a vacuum cleaner. Replace damaged filters immediately. |
| 2 | Check the surface of the lens output side for dust. (it is not needed to remove the lens from the projector). Only clean if necessary. | Clean the lens output side in case dust is clearly visible upon the surface.<br>**Note:** if the lens was removed from the projector, a manual “Lens Home & Return” action must be executed to calibrate the position of the lens in relation to the Lens Holder. This way the references of the existing 'lens files' remain valid. See user guide of the Communicator software. |
| 3 | Check the porthole (both sides) for dust. | Clean the porthole in case dust is clearly visible upon the surface. Use an optical cloth. |

# 3.2 Lamp change maintenance actions

## Maintenance actions at every lamp change

The maintenance actions, listed below, which are required at every lamp change may be performed by a trained projectionist who is familiar with potential hazards associated with the xenon lamp.

| No. | Maintenance action | Remarks |
|---|---|---|
| 1 | Check the UV blocker of the Lamp House for dust. | Only clean the UV blocker in case dust is clearly visible upon the surface of the UV blocker (both sides). Use an optical cloth. See service manual chapter “Cleaning the UV blocker of the Lamp House”, page 149. |
| 2 | Check the Reflector of the Lamp House for dust. | Only clean the Reflector in case dust is clearly visible upon the surface of the Reflector. Take the Lamp House to another room and use compressed air to blow away the dust. Use an optical cloth. See service manual chapter “Cleaning the Reflector of the Lamp House”, page 150. |
| 3 | Visual inspection of the lamp anode and cathode connectors of the Lamp House. | Replace the Lamp House in case of degradation, damage, etc. See service manual chapter “Lamps and Lamp House (manual and motorized track1)”, page 69. |
| 4 | Visual inspection of the lamp anode and cathode cables of the Lamp House. | Replace the Lamp House in case of degradation, damage, etc. See service manual chapter “Lamps and Lamp House (manual and motorized track1)”, page 69. |
| 5 | Check if all cables are still tightened. | See chapter “Lamps and Lamp House (manual and motorized track1)”, page 69. |

# 3.3 3 month maintenance actions

## MAINTENANCE TYPE B (perform every three months)

The 3 month maintenance actions, listed below, may be performed by a trained projectionist who is familiar with potential hazards associated with the product.

| No. | Maintenance action | Remarks |
|---|---|---|
| 1 | Clean the air vents/inlets of the projector:<br>• air inlet grid on the projector front cover (Card Cage compartment).<br>• air inlet grid on the projector rear cover (LPS compartment).<br>• air inlet grid of the LPS units (underneath the rear cover).<br>• air inlet grid of the Cold Mirror and SPG unit (bottom rear side of the projector).<br>• air inlet grid of the Heat Exchanger (bottom front side of the projector). | Use a vacuum cleaner. |
| 2 | Clean the cabinet of the projector. | Removal overall dust accumulation on projector covers. |
| 3 | Level verification of the liquid cooling circuit. | The level of the cooling liquid in the reservoir should be between the “Min” and “Max” indicators. If not, corrective action should be taken by certified service personnel. See service manual chapter “Filling the liquid cooling circuit”, page 290. |

# 3.4 1 year maintenance actions

## MAINTENANCE TYPE C (perform every year)

The 1 year maintenance actions, listed below, may **ONLY** be performed by **certified service personnel** who are familiar with potential hazards of the product and all product safety checks.

| No. | Component | Maintenance action | Remarks |
|---|---|---|---|
| 1 | **Dust in general** | Clean the air inlet of the anode fan. The metal mesh grid of the anode fan air inlet is located at the base of the Light Processor compartment (underneath the Integration Rod). | Use a vacuum cleaner and brush. |
| 2 | **Dust in general** | Remove all dust inside the Lamp House compartment. | Use a vacuum cleaner. Do NOT touch the Cold Mirror. |
| 3 | **Dust in general** | Check the Cold Mirror for dust, burn damage, degradation, cracks, etc. | Only clean the Cold Mirror in case dust is clearly visible upon the surface of the Cold Mirror. See service manual chapter “Cleaning the Cold Mirror”, page 209.<br>Replace the Cold Mirror in case of burn damage, degradation, cracks, etc. See service manual chapter “Replacement of the Cold Mirror assembly”, page 199. |
| 4 | **Dust in general** | Clean the metal mesh grid on top of the Lamp House. | Use a vacuum cleaner. |
| 5 | **Dust in general** | Check the mask and the integrator entry for burn damage, degradation, cracks, etc. Remove the Lamp House and look at the mask and integrator entry via the Cold Mirror. | Replace the Integration Rod and mask in case of burn damage, degradation, cracks, etc. See service manual chapter “Removal of the Integration Rod assembly (First generation Light Pipe)”, page 216. |
| 6 | **Dust in general** | Open the dowser (shutter) and check the prism exit side for dust, discoloration, damage, degradation, cracks, etc. | Only clean the prism exit side in case dust is clearly visible upon the surface of prism. See service manual chapter “Cleaning the Prism exit side”, page 266.<br>Replace the complete Light Processor Unit in case of degradation, cracks, etc. See service manual chapter “Light processor assembly removal”, page 236. |
| 7 | **Dust in general** | Check the porthole (both sides) for dust. | Only clean the porthole in case dust is clearly visible upon the surface. Use an optical cloth. |
| 8 | **Dust in general** | Clean the projector exterior (housing). | Report on cleanliness of booth! |
| 9 | **Dust in general** | Check the condition (hot state) of the Light Pipe and prism by looking for artifacts in the projected full white and full black patterns. | If artifacts are visible diagnose the Integration Rod. See service manual chapter “Integration Rod |

| No. | Component | Maintenance action | Remarks |
|---|---|---|---|
| | | | diagnostic (First generation Light Pipe)", page 214.<br>Replace the Integration Rod In case the Integration Rod causes the artifacts. See service manual chapter "Removal of the Integration Rod assembly (First generation Light Pipe)", page 216.<br>Replace the complete Light Processor Unit in case the prism causes the artifacts. See service manual chapter "Light processor assembly removal", page 236. |
| 10 | **Diagnostics** | Check actual diagnostics/self tests after 1 hour play with black image. See user guide of the Communicator software. | Note any irregularities and follow up. Take the necessary measurements if required. |
| 11 | **Diagnostics** | Check and save TI and projector log/history files. See user guide of the Communicator software. | Note any irregularities and follow up. |
| 12 | **Diagnostics** | Verify projector date and time and correct if required. | See Communicator software. |
| 13 | **Software version** | Check for the latest version of Barco and TI software. See user guide of the Communicator software. The latest software version can be downloaded from the secured Barco web site. | Upgrade the projector software with the latest version. See user guide of the projector toolset. |
| 14 | **Info-T's** | Check if all Info-T's are implemented. Note that the Info-T's are listed on the secured Barco web site. | If not, implement all Info-T's and update the projector service docket. |
| 15 | **Cooling circuit** | Check the condition of the tubing of the liquid cooling circuit for degradation, UV cracking, kinking of tubes, leakage. | Replace damaged parts immediately. See service manual chapter "Liquid Cooling Circuit", page 281. |
| 16 | **Cooling circuit** | Refresh the liquid of the cooling circuit. (drain, refill and expel air) | See chapter "Liquid Cooling Circuit", page 281.. |
| 17 | **Electrical connections** | Check the torque values/general condition of all critical electrical connections and components. Use a torque wrench to verify the torque values of the critical electrical connections listed:<br>• Nuts (x2) of the SPG socket inside the lamp house: 25 Nm.<br>• Cathode cable nut for the lamp cathode socket: 17 Nm.<br>• Hexagon socket head cap screw at the lamp cathode socket : 5 Nm.<br>• Nuts of the LAMP OUT ports of each LPS unit: 4 Nm | Do not release the nuts to check the torque. Just verify. See chapters "Power Rack", page 41, "Start Pulse Generator", page 61 and "Lamps and Lamp House (manual and motorized track1)", page 69. |
| 18 | **Lamp Module** | Check the UV blocker of the Lamp House for dust, burn damage, degradation, cracks, etc. | Only clean the UV blocker in case dust is clearly visible upon the surface of the UV blocker (both sides). See service manual chapter "Cleaning the UV blocker of the Lamp House", page 149. |

| No. | Component | Maintenance action | Remarks |
|---|---|---|---|
| | | | Replace the UV blocker in case of burn damage, degradation, cracks, etc. See service manual chapter “Replacement of the UV blocker”, page 131. |
| 19 | **Lamp Module** | Check the reflector of the Lamp House for dust, degradation, cracks, etc. | Only clean the reflector in case dust is clearly visible upon the surface of the reflector. Take the Lamp House to another room and use compressed air to blow away the dust from the reflector. See service manual chapter “Cleaning the Reflector of the Lamp House”, page 150.<br>Replace the reflector in case of burn damage, degradation, cracks, etc. See service manual chapter “Replacement of the Lamp Reflector”, page 135. |
| 20 | **Lamp Module** | Visual inspection of the lamp anode and cathode connectors of the Lamp House. | Replace the Lamp House in case of degradation, damage, etc. See service manual chapter “Lamps and Lamp House (manual and motorized track1)”, page 69. |
| 21 | **Lamp Module** | Visual inspection of the lamp anode and cathode cables of the Lamp House. | Replace the Lamp House in case of degradation, damage, etc. See service manual chapter “Lamps and Lamp House (manual and motorized track1)”, page 69. |
| 22 | **Lamp Module** | Check stepper motors (motorized Lamp House) or manual adjustments. Lubricate if needed. | |
| 23 | **Lamp Module** | Check the positional integrity of automatic lamp alignment/CLO. | Perform auto alignment. Manual adjustment afterwards should not improve light output. |
| 24 | **Lens holder** | Check the Lens Holder shift functionality (up/down & left/right). Lubricate where needed. | Use the local keypad or the Communicator software to shift. |
| 25 | **Lens holder** | Check the positional integrity of motorized adjustments by switching Macro's. | Verify correct alignment on screen between flat and scope. |
| 26 | **Lens holder** | Check the focus uniformity. | Adjust the Lens Holder (Scheimpflug) ONLY if needed. See service manual chapter “Scheimpflug adjustment”, page 322. |
| 27 | **Lens** | Check the optic surfaces of the lens input and output for dust. | Only clean the input and/or output side in case dust is clearly visible upon the surfaces. Use an optical cloth. See service manual chapter “Cleaning the lens”, page 328.<br>**Note:** if the lens was removed from the projector, a manual “Lens Home & Return” action |

| No. | Component | Maintenance action | Remarks |
|---|---|---|---|
| | | | must be executed to calibrate the position of the lens in relation to the Lens Holder. This way the references of the existing 'lens files' remain valid. See user guide of the Communicator software. |
| 28 | **Lens** | Check the lens Zoom & Focus motors. | Use the local keypad and the Communicator software to Zoom and to Focus. |
| 29 | **Shutter** | Check the functionality of the Dowser (shutter). Loose components, wear and tear. | Use the local keypad and the Communicator software to Open and Close the Dowser.<br>Replace the Dowser if needed. See service manual chapter “Replacement of the Dowser (Shutter)”, page 272. |
| 30 | **3D color wheel** | Check the 3D color wheel for degradation of coatings/ condition of glass segments. | Replace the 3D color wheel assembly. See manual R59770256 and R59770727 (Infitec 3D on Galaxy 4K). |
| 31 | **3D color wheel** | Check the spinning motor and retraction mechanism of the 3D color wheel assembly. | Wheel must turn before inserted into light path. |
| 23 | **3D color wheel** | Check the calibration of the 3D color wheel | Calibrate if required. See Communicator software. |
| 33 | **Electronic boards** | Check the general condition of the electronic boards in the Card Cage: Status LED's, dust, connections, etc. | Blow out dust. |
| 34 | **Security** | Check the Tamper Switch Activation Report and Security Logs for security infringements. | Report if intruded. |
| 35 | **Security** | Verify if the Dallas key is present and working. | Report if missing, lost or damaged. |
| 36 | **Air Extraction** | Check customer air extraction system for adequate extraction. | The air extraction system must be capable of removing minimum 10 m³/min or 350 CFM per installed DP2K-xxB digital projector. |
| 37 | **Color calibration** | Measure the color coordinates of the projected image and calibrated if necessary. | See user guide of the Communicator software. |
| 38 | **Documentation** | Check if the projector manuals are present and up-to-date. | Download current manual version from *https://My.Barco.com.* |
| 39 | **Documentation** | Update projector service docket. | List all maintenance actions and remarks. |

# 3.5 4 year maintenance actions

## MAINTENANCE TYPE D (perform every four years)

The 4 year maintenance actions, listed below, may **ONLY** be performed by **certified service personnel** who are familiar with potential hazards of the product and all product safety checks.

| No. | Maintenance action | Remarks |
|---|---|---|
| **1** | Replace the pump of the liquid cooling circuit | See service manual chapter “Replacement of the Pump (RD to RD)”, page 297. Refill the liquid cooling circuit afterwards. See service manual chapter “Liquid Cooling Circuit”, page 281. |
| **2** | Check all fans: vibrations, noise, speed, etc. (speeds: via diagnostics) | Replace if needed. See service manual chapter “Fan replacement procedures”, page 421. |
| **3** | Lubricate Motorized Lamp House | See service manual chapter “Lubrication of the XYZ mechanism”, page 148. |

# 4 Power Rack


4.1 Introduction ..... 42
4.2 Access to the power connection ..... 44
4.3 Power input setup of the DP2K and DP4K-32B ..... 45
4.4 Connecting the DP2K and DP4K-32B with the power net ..... 47
4.5 Connecting the DP2K and DP4K-19B/23B/P with the power net ..... 49
4.6 Power loop through to the projector electronics ..... 51
4.7 Connecting a UPS to the projector electronics ..... 52
4.8 LPS module diagnostic LED's ..... 53
4.9 Removal of an LPS module ..... 56
4.10 Installing an LPS module ..... 58


## About this chapter

This chapter describes the Power Rack and its components.

# 4.1 Introduction

## Functionality of the Power Rack

The power rack assembly is located at the rear side of the projector. The power rack has three LPS slots. Depending on the projector type DP2K and DP4K-19B/23B/P or DP2K and DP4K-32B either two or three slots contains a Lamp Power Supply (LPS) module. The LPS modules are connected with each other in parallel. Three LPS modules together can supply maximum 7000 watt to the xenon lamp inside the projector head. The maximum current that three LPS modules can supply is limited upon 170 ampere.

To ignite the lamp the voltage on the output pins of the LPS modules is brought up to 110 volt. This boots voltage will trigger the Start Pulse Generator (SPG) to ignite the lamp. Once the lamp is ignited the voltage on the output pins of the LPS modules is dropped to the typical arc voltage of the lamp e.g. 39 volt for a 6,5 kW lamp.

One LPS module can deliver maximum 2500 watts and maximum 100 amps. In normal situation, each LPS module delivers an equal part of the required power. So, for a DP2K and DP4K-32B with a 6,5 kW lamp having an arc voltage of 39 volt, each LPS module deliver 55,3 amps at 39 volt which is equal to 6500 watt.

When one of the three LPS modules suddenly fails during the event the other LPS modules will continue delivering 55,3 amps at 39 volt. As a result the projector light output will be reduced. In case the projector starts up and one LPS module remains down the other LPS modules will run on their maximum power and deliver each 64,1 amps at 39 volt which is equal to 5000 watt in total.

Behind each LPS module a Mains Filter is installed. The electrical connections of the Mains Filter are accessible through the openings in the metal plate of the Power Rack. To replace one of the Mains Filters the complete Power Rack has to be removed from the projector chassis.

Below the LPS slots of the Power Rack the power connections with the commercial power net are located. On the right side of the power connections the UPS ports are located.

In case on of the LPS modules fails an error will be logged in the projector log file.

## Power Rack of the DP2K and DP4K-32B versus DP2K and DP4K-19B/23B/P

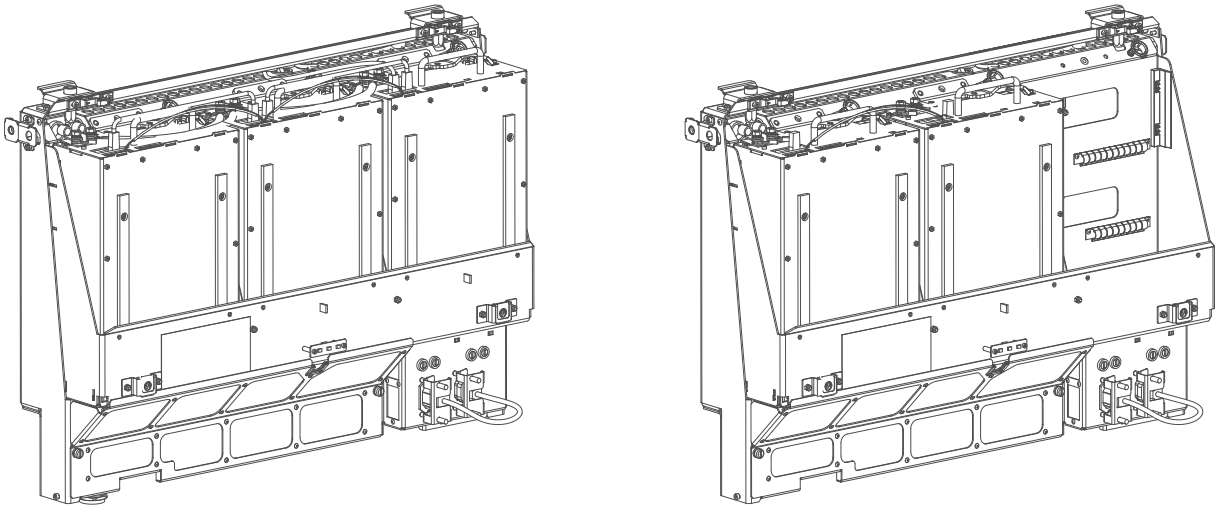

Image 4–1 Left: Power rack with three LPS modules for the DP2K and DP4K-32B. Right: Power rack with two LPS modules for the DP2K and DP4K-19B/23B/P.

## Single LPS module

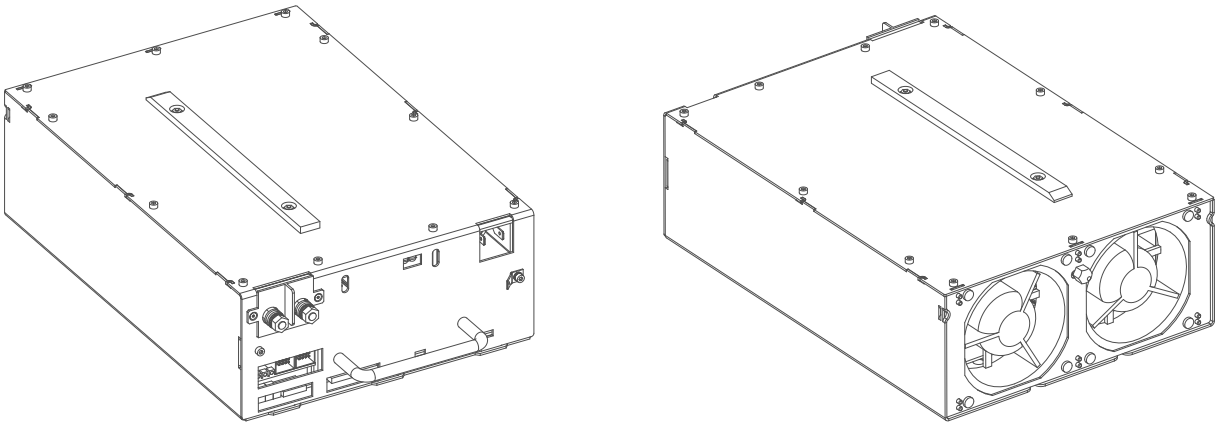

Image 4–2 Left: LPS module front view. Right: LPS module rear view.

# 4.2 Access to the power connection

## Required tools

Flat screw driver 6 mm

## How to access

1. Remove the back cover.
2. Loosen both captive screws (1).

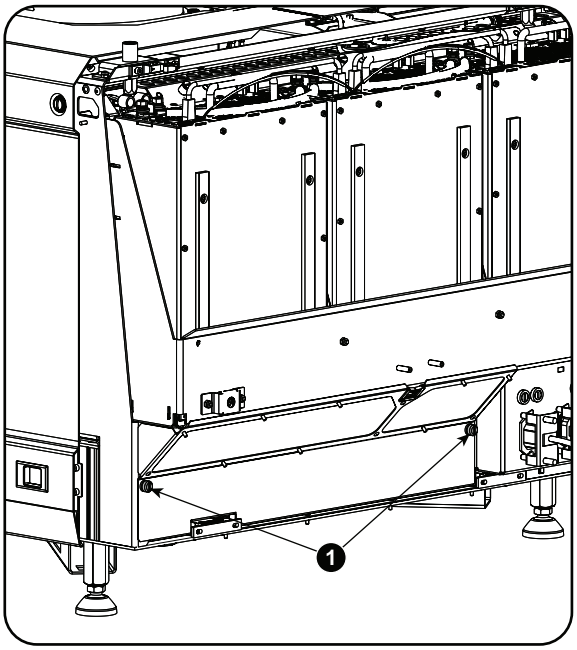


Image 4–3 Power connection cover, captive screws

3. Slide off the power connection cover.

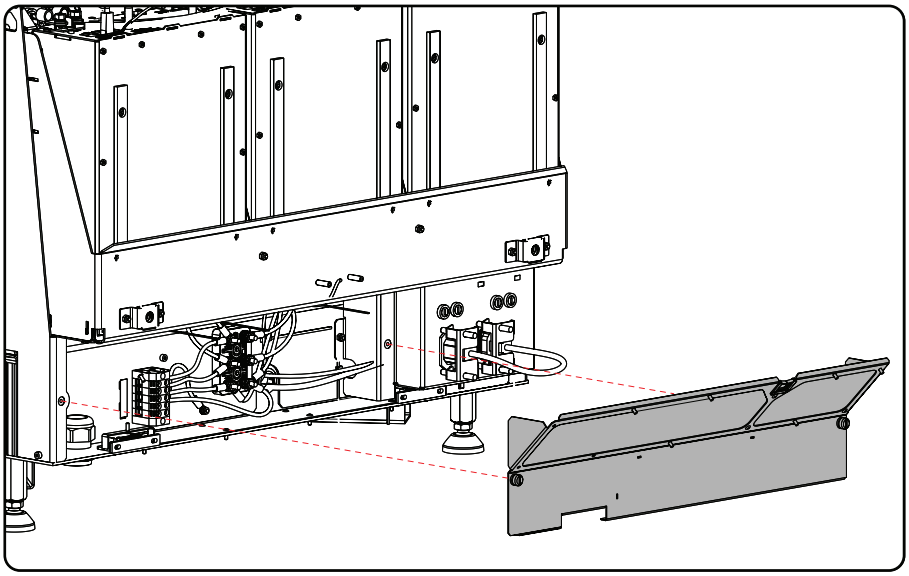

Image 4–4

The terminal barrier strip and Y/Δ configuration block is accessible.

# 4.3 Power input setup of the DP2K and DP4K-32B

## About the power input

The projector power input can be configured for a power supply of 200-240V/346-415V 3W +N +PE (Y-connection) or for 200-240V 3W +PE (Δ-connection). Before operating the projector, place the links in the correct position depending on the local power supply.

For a 3W+N+PE system, 346-415V is measured between the lines, 200-240V is measured between the lines and the neutral.

For a 3W+PE system, 200-240V is measured between the lines.

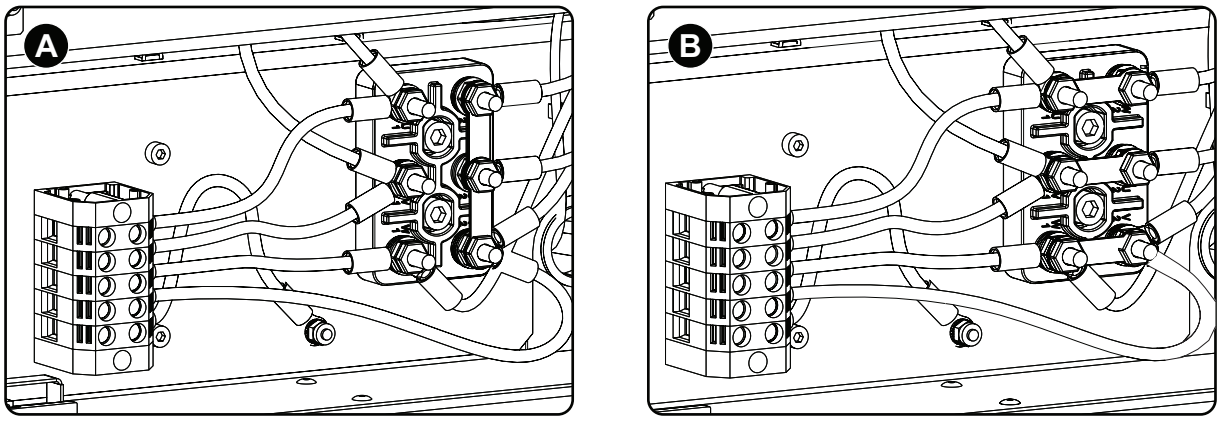


Image 4–5 Y-Δ connection

**A** Y connection
**B** Δ connection

## Required tools

- Flat screw driver
- Wrench 10 mm
- Torque wrench 10 mm

## How to switch from a Y-connection to Δ-connection

1. Loosen the 6 top nuts on the Y/Δ configuration block. (1 to 6)

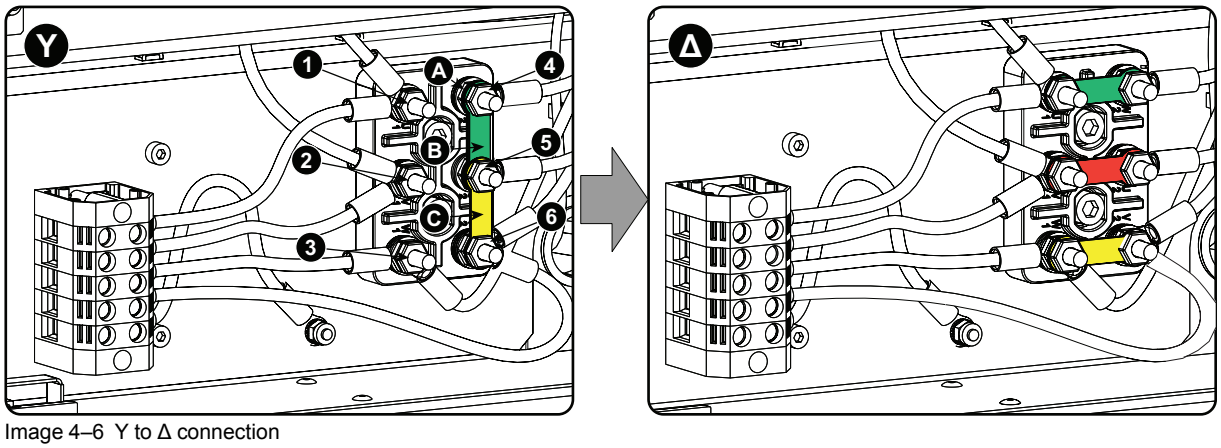


Image 4–6 Y to Δ connection

2. Take off the mounted lins (A, B and C). Two links above each other or mounted between the upper and middle pin (A, B) and one link between the middle pin and lower pin (C).
3. Mount the links horizontally on the pins.
4. Turn a nut on each pin and secure with a torque wrench set to **7.5 Nm**.

## How to switch from a Δ-connection to Y-connection

1. Loosen the top nuts on the Y/Δ configuration block (1 to 6).

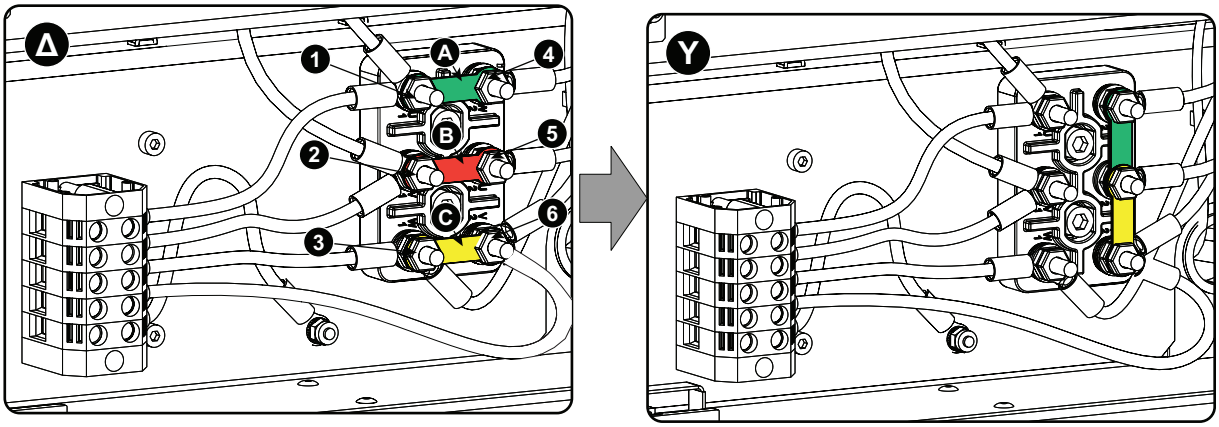


Image 4–7 Δ to Y connection

2. Take off the mounted links (A, B and C).
3. Connect the right pins together. Place 2 links between the upper pin and the middle pin (A, B)and 1 link between the middle pin and the lower pin (C).

# 4.4 Connecting the DP2K and DP4K-32B with the power net

**WARNING:** The total electrical installation should be protected by an appropriate rated and readily accessible disconnect switch, circuit breakers and ground fault current interrupters. The installation shall be done according to the local electrical installation codes.

**WARNING:** Make sure that the voltage range of projector matches with the voltage of the local power net.

**CAUTION:** The cross-sectional area of the conductors in the Power Supply Cord shall be not less than 4 mm² or AWG 10

## Required tools

- Flat torque screw driver 4 mm
- Adjustable wrench

## Required parts

- Certified power cable min. 4.0 mm², 10AWG. 500V (for 3W+N+PE), cable diameter between 11mm and 21 mm or
- Certified power cable min. 4.0 mm², 10AWG 300V (for 3W+PE) cable diameter between 11mm and 21 mm
- Circuit breaker maximum 40A

## How to connect

1. Remove the back cover.
2. Remove the power input cover.
3. Loosen the cable gland fixation ring (1).

*Note:* The cable gland (1) is specified for cables with a diameter between 11mm and 21mm.

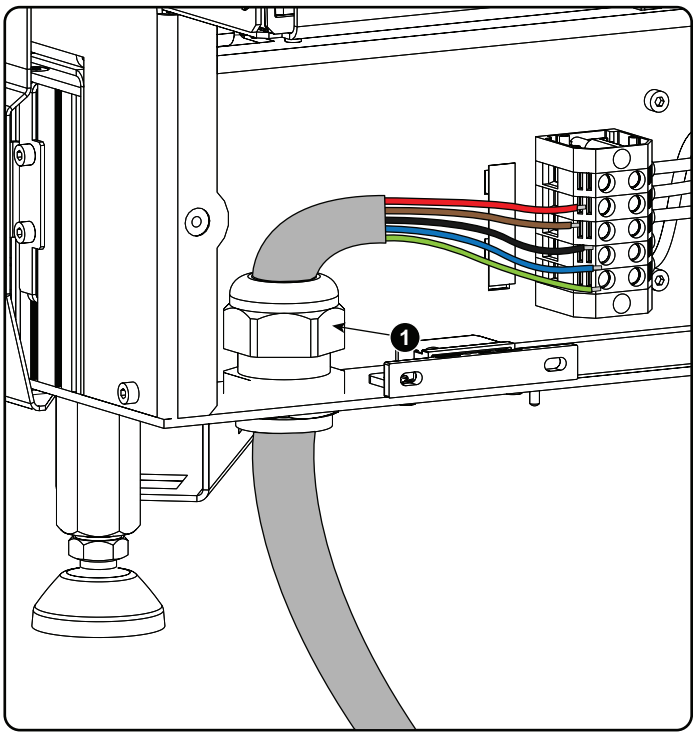


Image 4–8 Power cable connection

4. Push the stripped power supply cable through the cable gland. When using a flexible power cord, make sure that each conductor end is provided with an end sleeve.

   Fix the cable in the cable gland by securing ring 1 with an adjustable wrench.

5. Connect the power cord with the terminal barrier strip. Use a flat torque screw driver set to **1.4 Nm**.

   Always connect the ground wire (PE) with the connector indicated with *PE* on the terminal barrier strip.

   If a neutral conductor is available, connect always to the connector indicated with *N* on the terminal barrier strip

   ⚠ *Warning:* Always connect first the PE wire.

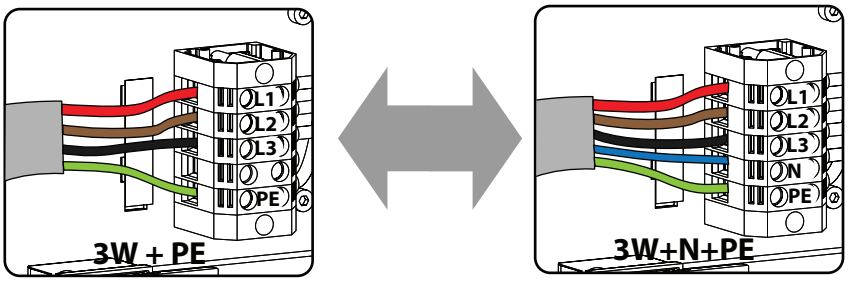


Image 4–9 Terminal connections

6. Reinstall the power connection cover.

# 4.5 Connecting the DP2K and DP4K-19B/23B/P with the power net

**WARNING:** The total electrical installation should be protected by an appropriate rated and readily accessible disconnect switch, circuit breakers and ground fault current interrupters. The installation shall be done according to the local electrical installation codes.

**WARNING:** Make sure that the voltage range of projector matches with the voltage of the local power net.

**CAUTION:** The cross-sectional area of the conductors in the Power Supply Cord shall be not less than 4 mm² or AWG 10

## Required tools

- Flat torque screw driver
- Adjustable wrench

## Required parts

- Certified power supply cord 4.0 mm², 10AWG, min. 300V, diameter between 11 mm and 21 mm
- Circuit breaker maximum 40A

## How to connect

1. Remove the back cover.
2. Remove the power input cover.
3. Loosen the cable gland fixation ring (1).

   *Note:* The cable gland (1) is specified for cables with a diameter between 11mm and 21mm.

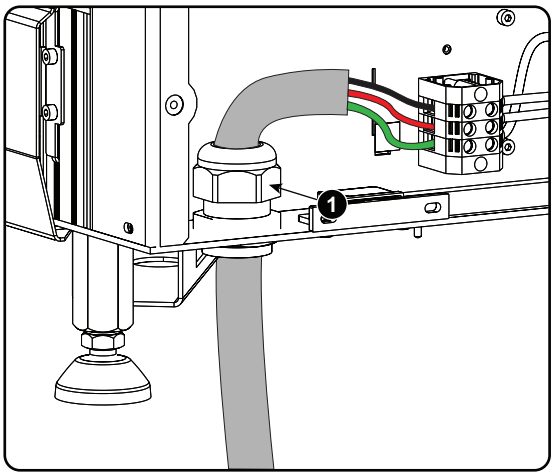


Image 4–10 Power cable connection

4. Push the stripped power supply cable through the cable gland. When using a flexible power cord, make sure that each conductor end is provided with an end sleeve.

   Fix the cable in the cable gland by securing ring 1 with an adjustable wrench.

5. Connect the power cord with the terminal barrier strip. Use a flat torque screw driver set to **2 Nm**.

   Always connect the ground wire (PE) with the connector indicated with *PE* on the terminal barrier strip.

   *Warning:* Always connect first the PE wire.

6. Reinstall the power connection cover and the back cover.

# 4.6 Power loop through to the projector electronics

This procedure explains how to provide the projector electronics with power in case no UPS unit is used. Note that the projector is by default configured for use without UPS. So, the short power link cable is already installed.

## Required tools

No tools required.

## Required parts

Short power link cable with plug type C13/C14

## How to loop through the power

1. Plug in the short power cable (1) which was delivered with the projector.

   *Warning:* Always use the Barco short power cable which is delivered with the projector.

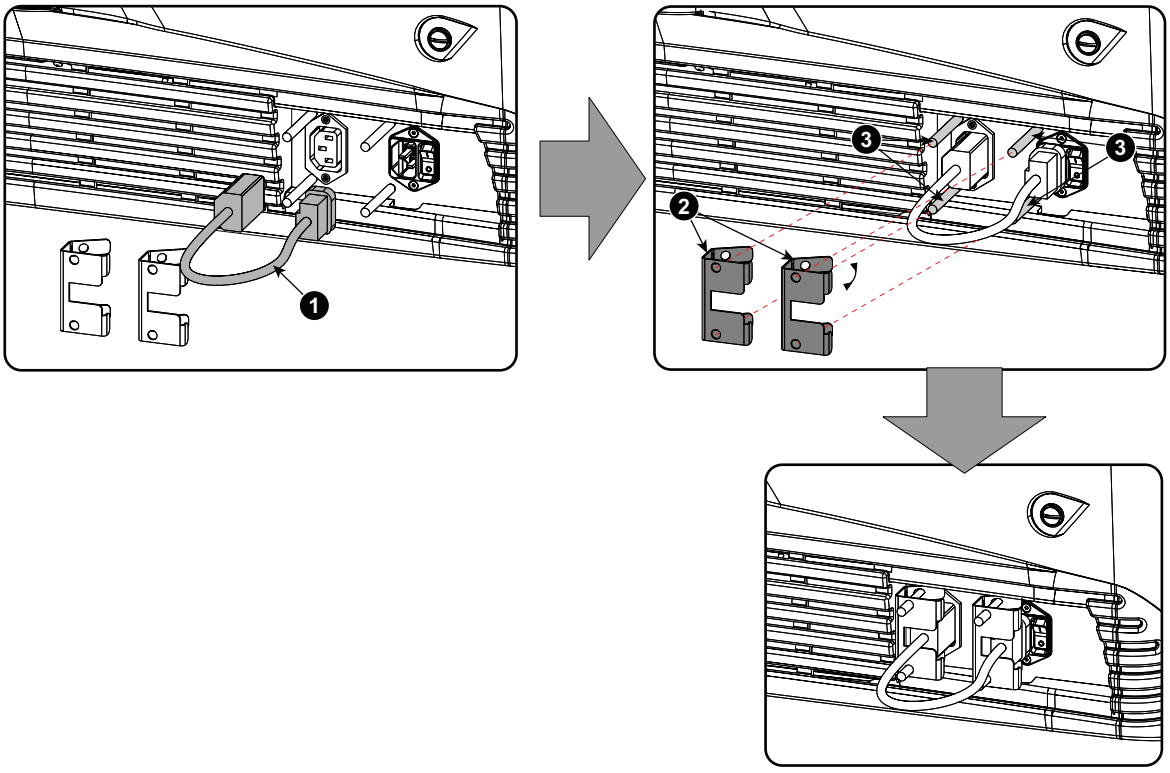


Image 4–11 Power loop through connection

2. Secure both plugs of the short cable with a fixation spring (2). Handle as follow:
   - Squeeze the fixation spring together.
   - Slide the fixation spring on the fixation pins (3) while squeezing together and push it against the power plug.
   - Release the fixation spring.

# 4.7 Connecting a UPS to the projector electronics

**WARNING:** Only use UPS units which are suitable for the DP2K and DP4K B series. See chapter ”General”, “Installation requirements” for more information about the requirements of the UPS.

## How to connect the UPS

1. Install the UPS according to the instructions of the manufacturer and the local regulations.
2. Connect the power output cord from the UPS unit to the UPS inlet socket of the projector (right socket).

   Connect directly (A) or drag the cable behind the front cover so that the front cover can be removed without removing the UPS INLET cable (B).

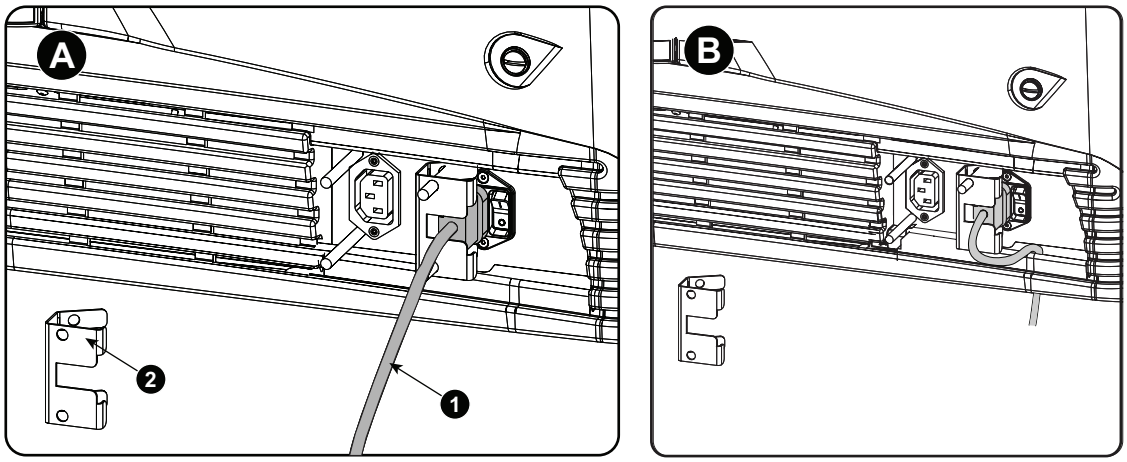


Image 4–12 UPS connection

3. Secure the UPS inlet socket with a fixation spring. Handle as follow:
   - Squeeze the fixation spring together.
   - Slide the fixation spring on the fixation pins while squeezing together and push it against the power plug.
   - Release the fixation spring.
4. Install on the power outlet the second fixation spring to prevent losing it (2).

**CAUTION:** The electrical connection with the UPS INLET socket of the projector must be done with a certified AC power supply cord (minimum 0,75 mm² or 18 AWG and minimum 300V)

**CAUTION:** Do not use the power OUTLET socket of the projector to provide power to other equipment!

# 4.8 LPS module diagnostic LED's

## Status LED's on the LPS module

There are 8 diagnostic LED's on the LPS module. Four orange, three green and one red LED.

The orange LED “LVPS OK” lights up immediately after the projector is switched on. At the same time, the heartbeat LED starts blinking. All other status LEDs of the LPS unit remain off. This is the standby status of the LPS unit. Once the command is sent to the LPS units to start up the projection lamp, the green LEDs are lighting up one after the other. First the green LED “PFC OK”, then the green LED “LPS OK” and finally, when the lamp is ignited, the green LED “LAMP ON”. The right orange of the upper row blinks. This is the heartbeat signal.

The red LED “ERR” remains off unless an error is detected inside the LPS unit or when the LPS unit is ordered to shutdown due to a malfunction somewhere else inside the projector.

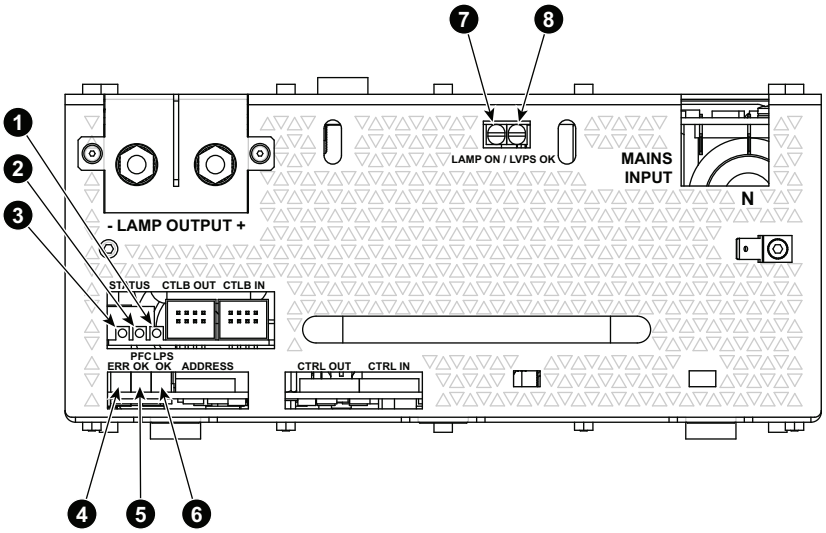


Image 4–13

1 Diagnostic LED “LPS HEARTBEAT” (orange).
2 Diagnostic LED (internal use only) (orange).
3 Diagnostic LED “LPS TRANS” (orange).
4 Diagnostic LED “ERROR” (red).
5 Diagnostic LED “PFC OK” (green).
6 Diagnostic LED “LPS OK” (green).
7 Diagnostic LED “LAMP ON” (green).
8 Diagnostic LED “LVPS OK” (orange).

## Diagnostic

About the orange LEDs next to the CTRL connectors:

LED 2 is only for internal use. LED 1 is the heartbeat LED.

| LPS HEARTBEAT (Orange LED 1) | Diagnostics | Action |
|---|---|---|
| Blinking | Normal operation | - |
| OFF | 12 V from backplane via CTRL IN not available on LPS unit | Check 12V out on backplane. |
| ON | 12 V from backplane available. | Replace the LPS unit. |

| LPS TRANS (Orange LED 3) | Diagnostics | Action |
|---|---|---|
| Blinking | Normal operation, blinks each time a valid transmission has been received | - |
| OFF or ON | Communication fault (no reception of valid commands from primary side) | Replace LPS unit. |
| | Fault on primary side of LPS (E.g. fuse blown and no mains voltage available inside LPS) | Replace fuse.<br>If the problem is not solved, replace LPS |

| LPS TRANS (Orange LED 3) | Diagnostics | Action |
|---|---|---|
| | No mains voltage present at input of LPS mains terminals | Check main voltage. |

About the diagnostic LEDs, ERR, PFC, LPS, Lamp ON and LVPS.

| Orange LVPS OK | Green PFC OK | Green LPS OK | Green LAMP OK | Red ERR | Diagnostic | Action |
|---|---|---|---|---|---|---|
| OFF | OFF | OFF | OFF | OFF | No input voltage. | Switch on the projector. |
| ON | OFF | OFF | OFF | OFF | Standby modus of LPS unit. | — |
| ON | ON | ON | OFF | OFF | PFC and LPS seems to work normally but the lamp is not ignited. This situation can be the result of a bad lamp or SPG module. | • Install another xenon lamp in case the voltage on the “LAMP OUT” pins is 140 volt and you hear the SPG three times clicking to ignite the lamp.<br>• Replace the SPG module in case the voltage value on the “LAMP OUT” pins is >140 volt and you do not hear the SPG module clicking to ignite the lamp.<br>• Replace the LPS module in case the voltage value on the “LAMP OUT” pins is below 140 volt and the lamp is not ignited. |
| ON | ON | ON | ON | OFF | LPS unit is operating normally. Projector lamp is ignited. | — |
| ON | OFF | OFF | OFF | ON | LPS internal temperature is too high. | • Check if the LPS air inlet inside the projector is not blocked.<br>• Check if the air outlet at the rear of the projector is not blocked.<br>• If the problem remains, replace the LPS module. |
| ON | OFF | OFF | OFF | Blinking | Error detected inside this LPS unit. | Replace the LPS module. |
| | | | | | External error detected from Fan Control board. | • Check projector log files for error messages (temperatures, fan speed, etc.)<br>• Check Fan Control board. |

**Normal conditions of diagnostic LEDs when a lamp is switched ON**

- LED 1 (orange right) : flashing (heartbeat)
- LED 2 (orange center) : not defined
- LED 3 (orange left) : flashing few times / second
- ERR : OFF
- PFC OK : ON (green)
- LPS OK : ON (green)
- LAMP ON : ON (green)
- LVPS OK : ON (orange)

# 4.9 Removal of an LPS module

This procedure describes how to remove the LPS module located in the middle of the Power Rack. Nevertheless, the same procedure is applicable upon the other LPS modules in the Power Rack as well. To access the LPS modules in the Power Rack the rear cover of the projector has to be removed. This procedure assumes that the rear cover is already removed.

## Required tools

- 10 mm nut driver.
- Flat screw driver.

## How to remove an LPS module from the Power Rack?

1. Make sure that the power to the projector is switched off.
2. Disconnect the mains input wire units (reference 1 & 2 Image 4–14) and PE wire unit (reference 3 Image 4–14) from the LPS module.

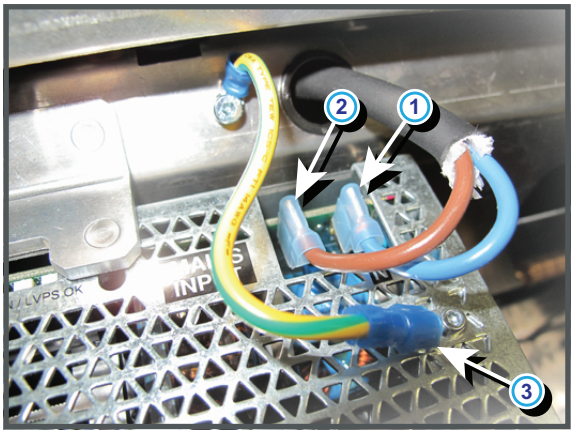


Image 4–14

3. Disconnect the *'CTLB IN'* (reference 4) , *'CLTB OUT'* (reference 5) and *'ADDRESS'* (reference 6) wire units from the LPS module.

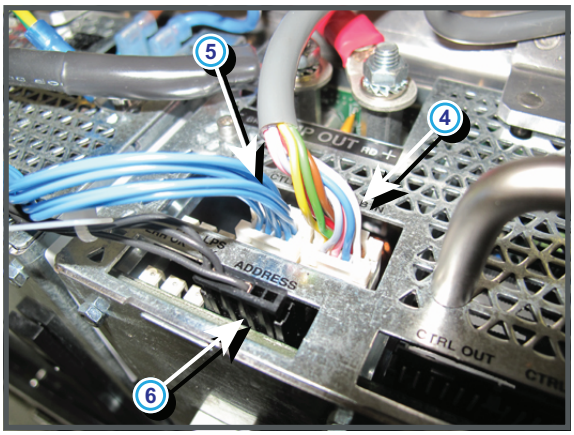


Image 4–15

4. Disconnect the *'LAMP OUT'* cables (reference 7 & 8) from the LPS module. Use a 10 mm nut driver.

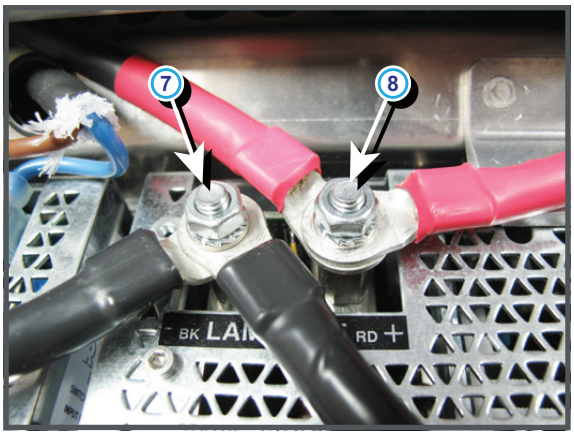


Image 4–16

5. Remove the LPS lock bracket. Use a flat screw driver to release the retaining screw of the bracket.

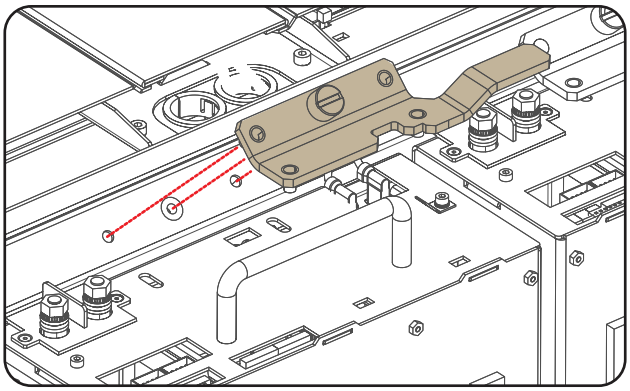

Image 4–17

6. Pull out the LPS module from the Power Rack.

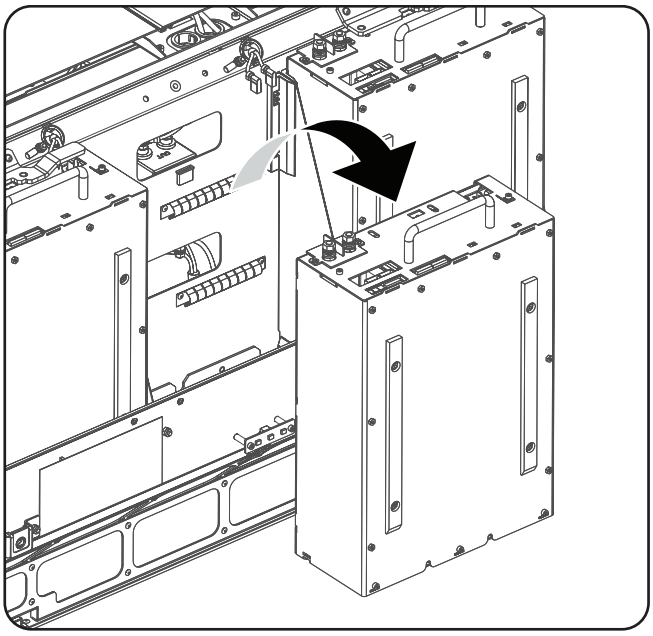

Image 4–18

# 4.10 Installing an LPS module

This procedure describes how to install the LPS module located in the middle of the Power Rack. Nevertheless, the same procedure is applicable upon the other LPS modules in the Power Rack as well.

## Required tools

- Flat screw driver.
- Torque wrench with a 10 mm hexagon socket.

## How to install an LPS module in the Power Rack?

1. Place the LPS module in the Power Rack as illustrated.

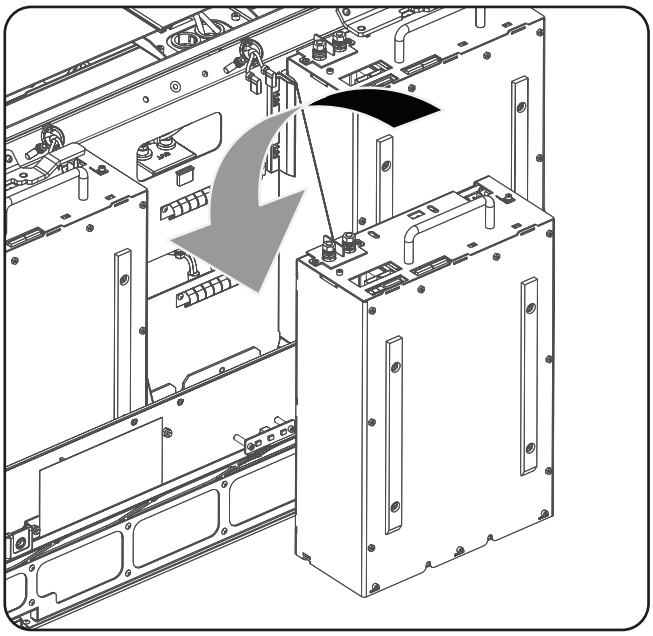

Image 4–19

2. Install the LPS lock bracket as illustrated. Use a flat screw driver to fasten the retaining screw of the bracket.

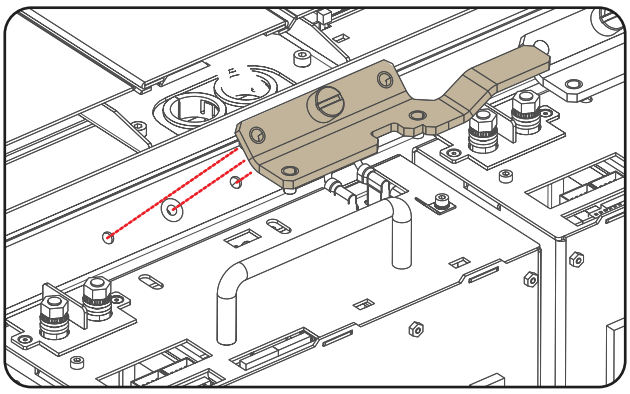

Image 4–20

3. Connect the *'LAMP OUT'* power cables with the LPS module as illustrated. Respect the polarity of the socket and cables. Use a torque wrench with a 10 mm hexagon socket to fasten the nuts on the pins with a torque of **4Nm** (2.95 lbt*ft).

   *Caution:* Make sure to place the washers and cable eyes in correct order upon the pins as illustrated. First a plane washer (reference 1), then the wire lugs (reference 2) , then again a plane washer (reference 3) , then the lock washer (reference 4) and finally the nut (reference 5).

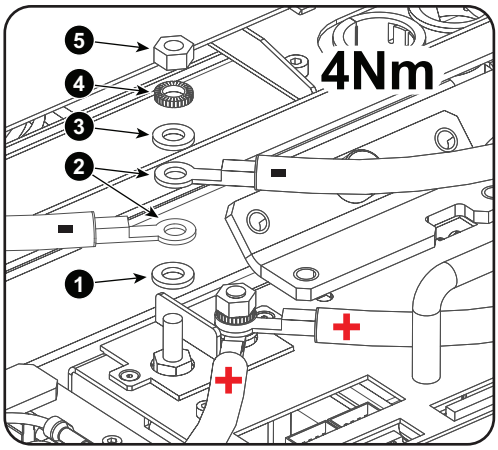


Image 4–21

4. Connect the *'CTLB IN'* (reference 4) , *'CTLB OUT'* (reference 5) and *'ADDRESS'* (reference 6) wire units with the LPS module.

   *Caution:* Make sure that the wire unit of the *'CLTB OUT'* port goes to the *'CLTB IN'* port of the next (left hand site) LPS module.

   *Caution:* Respect the marking LEFT, RIGHT and MIDDLE (optional) on the *'ADDRESS'* wire unit. The plug marked with LEFT must be connected with the most left LPS module etc.

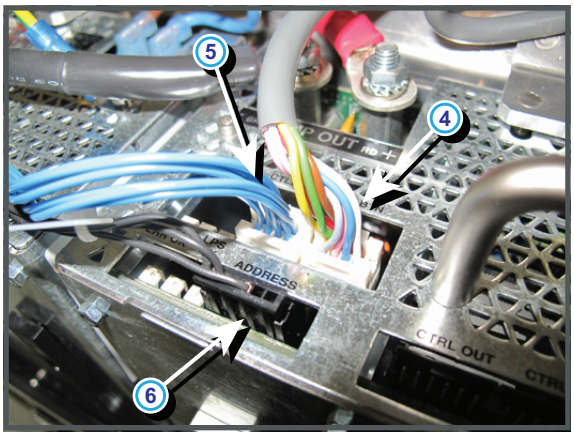


Image 4–22

5. Connect the mains input wires (reference 1 & 2 Image 4–23) and PE wire (reference 3 Image 4–23) with *'MAINS INPUT'* port of the LPS module.

   *Caution:* Make sure that the blue (or white) wire is connected with right pin which is marked with 'N".

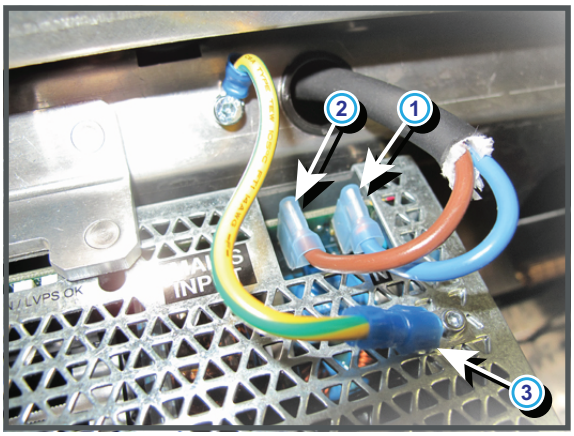


Image 4–23

6. Install the rear cover of the projector.

# Start Pulse Generator

# 5


5.1 Introduction ..... 62
5.2 Troubleshooting ..... 63
5.3 Removal of the Start Pulse Generator ..... 64
5.4 Installation of the Start Pulse Generator ..... 66


## About this chapter

This chapter describes briefly the functionality, the different parts and the replacement procedure of the Start Pulse Generator (SPG).

# 5.1 Introduction

## Functionality of the Start Pulse Generator

The purpose of the Start Pulse Generator (SPG) is to ignite the lamp with a burst of high voltage peaks. The SPG superimposes high voltage peaks onto the normal dc startup voltage of the lamp supplied by the Lamp Power Supply modules. Once the lamp is started up and illuminating the high voltage is removed and the lamp voltage drops to the arc voltage. The high voltage peaks are added to the lamp voltage by a superimposing transformer which is in series with the positive connection from the LPS to the lamp. The negative connection from LPS to lamp is direct and is connected to the chassis at the lamp side. The full lamp current passes through the secondary of the superimposing transformer.

## Parts

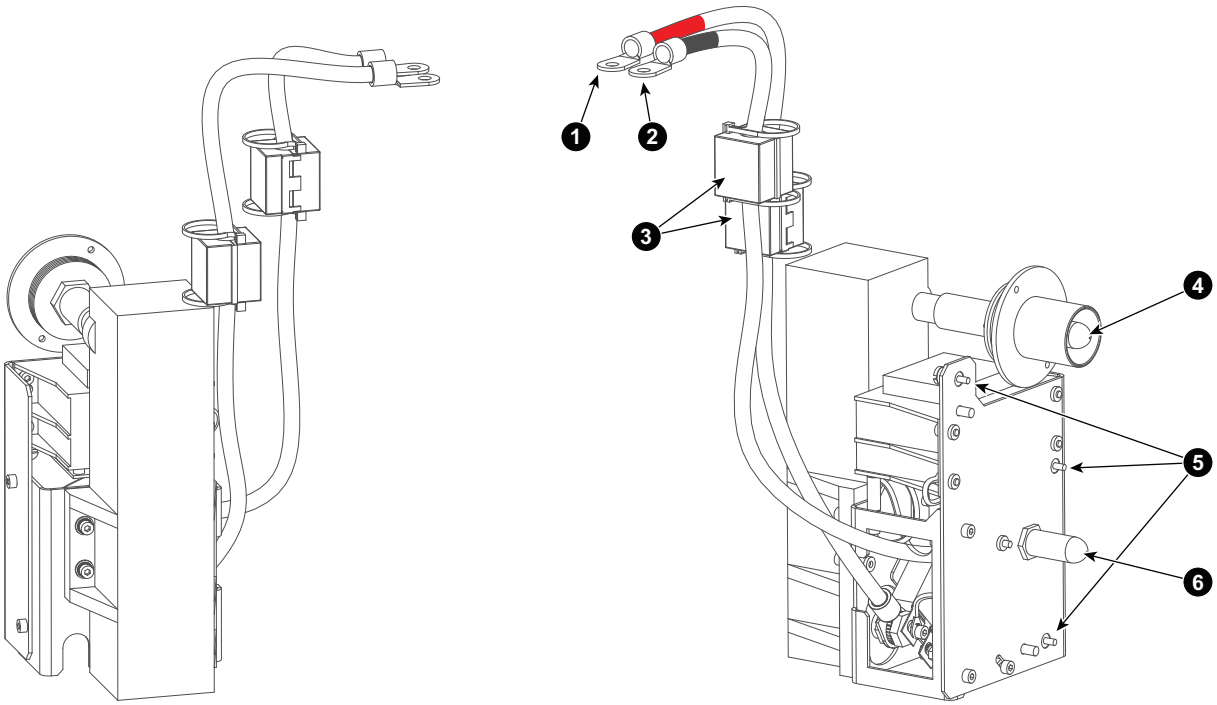


Image 5–1

1 Red marked cable lug. Has to be connected with the positive “LAMP OUT” pin of the LPS modules.
2 Black marked cable lug. Has to be connected with the negative “LAMP OUT” pin of the LPS modules.
3 Ferrite blocks.
4 Positive connection pin from SPG to Lamp House.
5 Retaining fixation screws.
6 Negative connection pin from SPG to Lamp House.

# 5.2 Troubleshooting

### Lamp fails to ignite after you switched the projector from standby to operation

| Situation | Solution |
|---|---|
| You can hear the SPG module three times clicking in an attempt to ignite the lamp. The voltage on the “LAMP OUT” pins of the LPS modules of the Power Unit is first greater than 140 volt during the attempt to ignite and then drops to 0 volt.<br>**Note**: The ambient noise must be low to hear the SPG clicking in an attempt to ignite the lamp. | • The LPS modules and SPG seem the work normally but the lamp is bad. Install another lamp house.<br>• If the problem remains, replace the SPG module. |
| You can not hear the SPG module three times clicking in an attempt to ignite the lamp. The voltage on the “LAMP OUT” pins of the LPS modules of the Power Unit is first greater than 140 volt during the attempt to ignite and then drops to 0 volt.<br>**Note**: The ambient noise must be low to hear the SPG clicking in an attempt to ignite the lamp. | • Check the cabling of the SPG module.<br>• Replace the SPG module. |
| You can not hear the SPG module three times clicking in an attempt to ignite the lamp. The voltage on the “LAMP OUT” pins of the LPS modules of the Power Unit is below 140 volt during the attempt to ignite. The diagnostic LED's of the LPS module indicates a problem with the LPS module.<br>**Note**: The ambient noise must be low to hear the SPG clicking in an attempt to ignite the lamp. | • Check the cabling of the LPS module.<br>• Replace the LPS module. |

# 5.3 Removal of the Start Pulse Generator

To remove the Start Pulse Generator, the left cover, the right cover, the rear cover and the Lamp House have to be removed first. This procedure assumes that the left cover, the right cover, the rear cover and the Lamp House are already removed.

## Required tools

- 3mm Allen wrench.
- Flat screwdriver.
- 10mm nut driver.

## How to remove the Start Pulse Generator?

1. Make sure that the power to the projector is switched off.
2. If it is present, remove the inner cover plate of the SPG/Cold Mirror compartment. Use a 3mm Allen wrench to release the four hexagon socket head cap screws (reference 1) as illustrated.

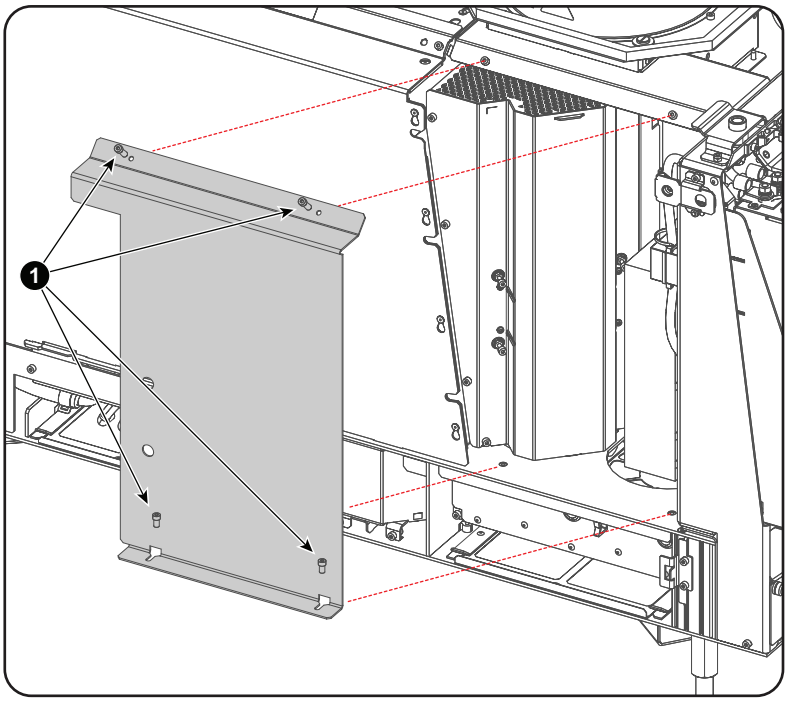


Image 5–2

*Note:* The inner cover plate is generally not present in the most recent projectors.

3. Disconnect the SPG power cables (reference 1 & 2) from the “LAMP OUT” pins of the LPS module. Use a 10mm nut driver.

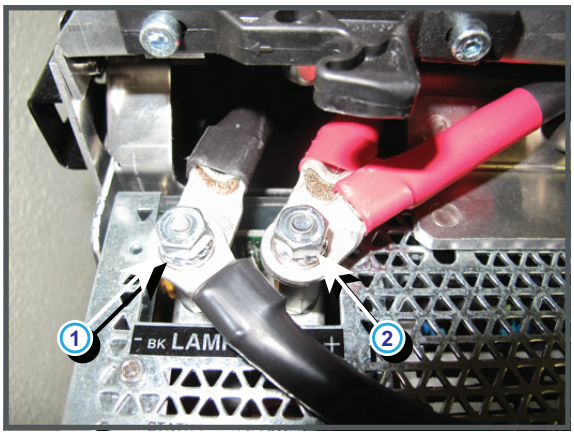


Image 5–3

4. Pull the SPG power cables through the chassis holes between the SPG and LPS compartments.
5. Remove the SPG module from the projector by releasing the three retaining screws (reference 1). Use a flat screwdriver.

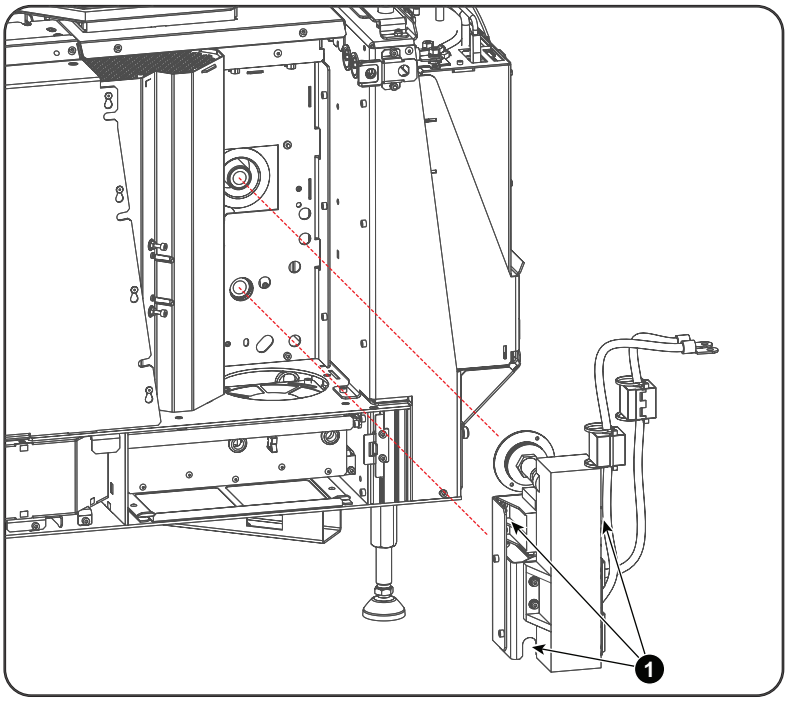


Image 5–4

# 5.4 Installation of the Start Pulse Generator

## Required tools

- Flat screwdriver.
- Torque wrench with a 10mm hexagon socket.
- 3mm Allen wrench.

## How to install the Start Pulse Generator?

1. Place the SPG module into position and fasten the three retaining screws (reference 1). Use a flat screwdriver.

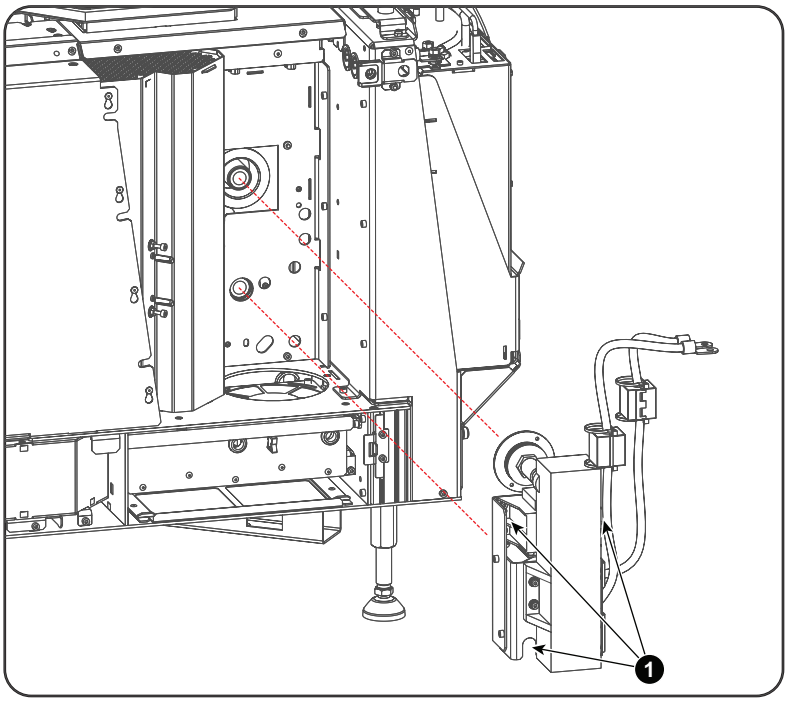


Image 5–5

2. Guide the SPG power cables through the holes (red cable through the most inner hole) between the SPG and LPS compartments.

3. Connect the power cables from the SPG module with the “LAMP OUT” sockets of the LPS module as illustrated. Use a torque wrench with a 10mm hexagon socket to fasten the nuts with a torque of **4Nm** (2.95 lbt*ft).

   *Caution:* Make sure to place the washers and cable eyes in correct order upon the pins as illustrated. First a plane washer (reference 1), then the wire lugs (reference 2) , then again a plane washer (reference 3) , then the lock washer (reference 4) and finally the nut (reference 5).

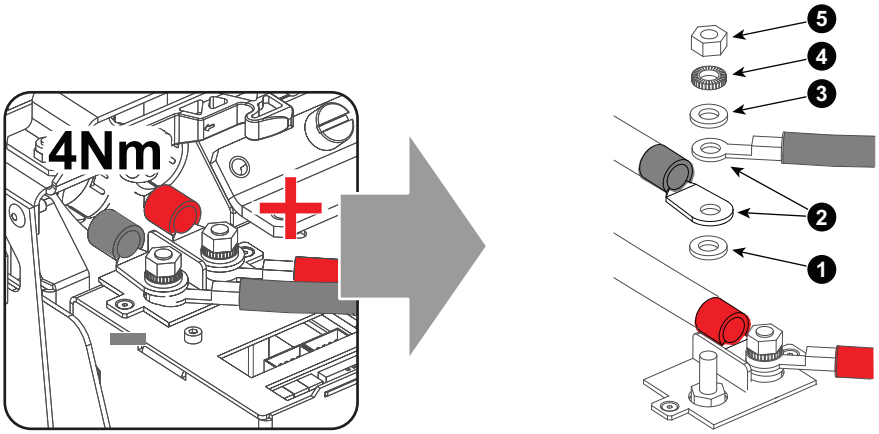


Image 5–6

4. Reinstall the inner cover plate of the SPG/Cold Mirror compartment. Use a 3mm Allen wrench to fasten the four hexagon socket head cap screws (reference 1) as illustrated.

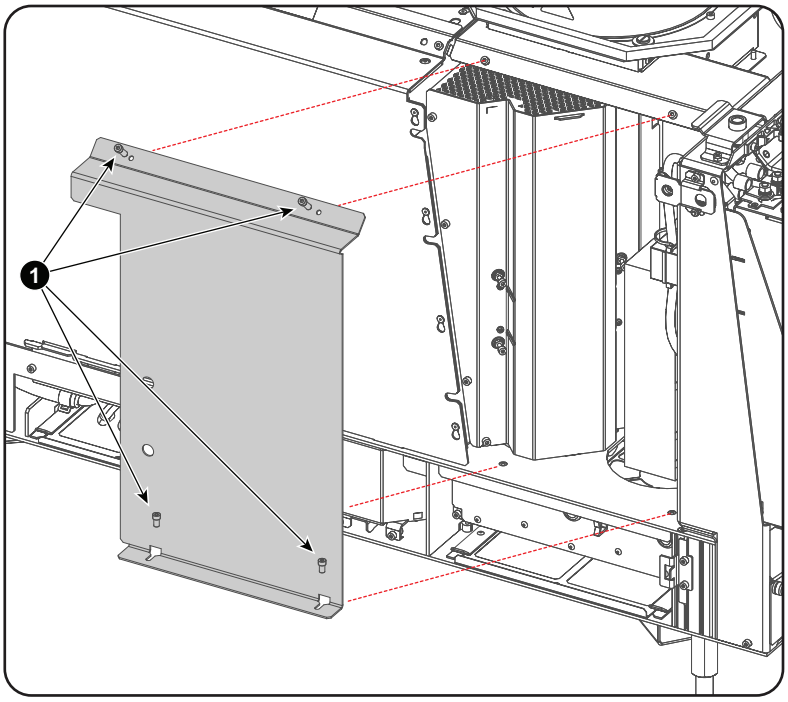


Image 5–7

5. Reinstall the left cover and rear cover of the projector.

# Lamps and Lamp House (manual and motorized track1)

# 6


6.1 Introduction ..... 71
6.2 Supported xenon lamps for the XL Lamp House ..... 75
6.3 Supported xenon lamps for the S/M Lamp House ..... 77
6.4 Removal of the Lamp House ..... 78
6.5 Removal of the xenon lamp from Lamp House ..... 79
6.6 Removal of the xenon lamp from manual S/M Lamp House ..... 84
6.7 Installation of the xenon lamp in manual XL Lamp House ..... 88
6.8 Installation of the xenon lamp in manual S/M Lamp House ..... 94
6.9 Removal of the xenon lamp from motorized XL Lamp House ..... 99
6.10 Removal of the xenon lamp from motorized S/M Lamp House ..... 104
6.11 Installation of the xenon lamp in motorized XL Lamp House ..... 108
6.12 Installation of the xenon lamp in motorized S/M Lamp House ..... 114
6.13 Installation of the Lamp House ..... 119
6.14 Resetting lamp parameters & lamp alignment ..... 120
6.15 Replacement of the Lamp Info module ..... 127
6.16 Replacement of the UV blocker ..... 131
6.17 Replacement of the Lamp Reflector ..... 135
6.18 Replacement of the Lamp Reflector (second generation) ..... 139
6.19 Realignment of the lamp in its reflector (manual Lamp House) ..... 143
6.20 Replacing a stepper motor of Motorized Lamp House ..... 145
6.21 Lubrication of the XYZ mechanism ..... 148
6.22 Cleaning the UV blocker of the Lamp House ..... 149
6.23 Cleaning the Reflector of the Lamp House ..... 150


## About this chapter

This chapter enumerates all the supported xenon lamps for the DP2K and DP4K B series and how to replace the xenon lamp in the Lamp House. Also included are the procedure to reset the lamp parameters, which is required after a xenon lamp replacement, and the procedure to realign the lamp in its reflector for optimal performance.

Also included in this chapter are the replacement procedures for the UV blocker, Lamp Reflector and the Lamp Info module.

**WARNING:** DO NOT PERMIT UNAUTHORIZED PERSONNEL TO PERFORM OR ATTEMPT ANY PHASE OF XENON LAMP HANDLING OR SERVICE. ONLY TRAINED AND QUALIFIED TECHNICAL SERVICE PERSONNEL ARE ALLOWED TO HANDLE THE XENON LAMP.



**CAUTION:** Xenon compact arc lamps are highly pressurized. When ignited, the normal operating temperature of the bulb increases the pressure to a level at which the bulb may explode if not handled in strict accordance to the manufacturer's instructions. The bulb is stable at room temperature, but may still explode if dropped or otherwise mishandled. Whenever the lamp house, containing a xenon lamp, has to be dismantled or whenever the protective container or cloth has to be removed from the xenon lamp, authorized protective clothing MUST be worn!



**WARNING:** Always wear face protection (full face shield) when handling xenon lamps.



**WARNING:** Always wear protective clothing (welder's jacket) when handling xenon lamps.



**WARNING:** Always wear clean leather gloves with wrist protectors when handling xenon lamps.

## About the where used of lamp houses

**S/M Lamp House** are used in DP2K-19B, DP2K-23B, DP4K-19B, DP4K-23B, DP2K-P and DP4K-P projectors

**XL Lamp House** are used in DP2K-32B and DP4K-32B projectors

# 6.1 Introduction

## Lamp and Lamp House

Xenon lamps are highly pressurized. At room temperature the pressure inside the bulb is between 10 and 15 bar. When ignited, the normal operating temperature of the bulb increases the pressure up to somewhere between 30 and 50 bar. The bulb temperature of an ignited lamp is approximately 700°C and the temperature of the arc is approximately 12000°C! To ignite a xenon lamp a voltage of 40000 volt is required. Once the lamp is ignited the startup voltage drops to a level between 20 and 42 volt. The DC current consumed by the lamp during normal operation can increase to 170 ampere. The maximum light produced by the xenon lamp inside the DP2K and DP4K-32B projector is roughly 250000 lumens.

The xenon lamp is safely sheltered inside the Lamp House. The Lamp House exist in a reflector, a UV blocker, a lamp anode socket, a lamp cathode socket, a Lamp Info module, and a manual or motorized XYZ-adjustment mechanism to align the lamp in the reflector. The Lamp House can handle xenon lamps up to 7000 Watt. The xenon lamp and Lamp House can be removed from the projector as a whole, which allows a fast lamp replacement in cases when time is critical.

The Motorized Lamp House has a motorized XYZ-adjustment mechanism. This feature combined with the built-in Light Sensor of the projector allows for an automated adjustment of the lamp position for maximum light output of the projector.

The Lamp Info module holds the lamp parameters and keeps track of the lamp history such as lamp power, number of strikes, total lamp run time, etc. For that it is important to reset the lamp parameters after each lamp replacement.

## Parts identification xenon lamp

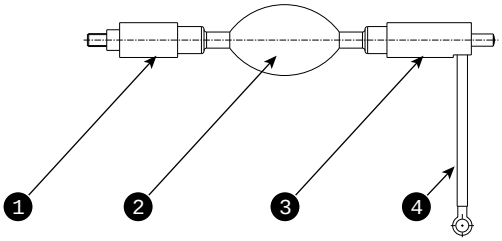


Image 6–1

1 Cathode of the xenon lamp.
2 Envelope (bulb) of the xenon lamp.
3 Anode of the xenon lamp.
4 Anode wire of the xenon lamp.

## Parts identification manual Lamp House (first generation)

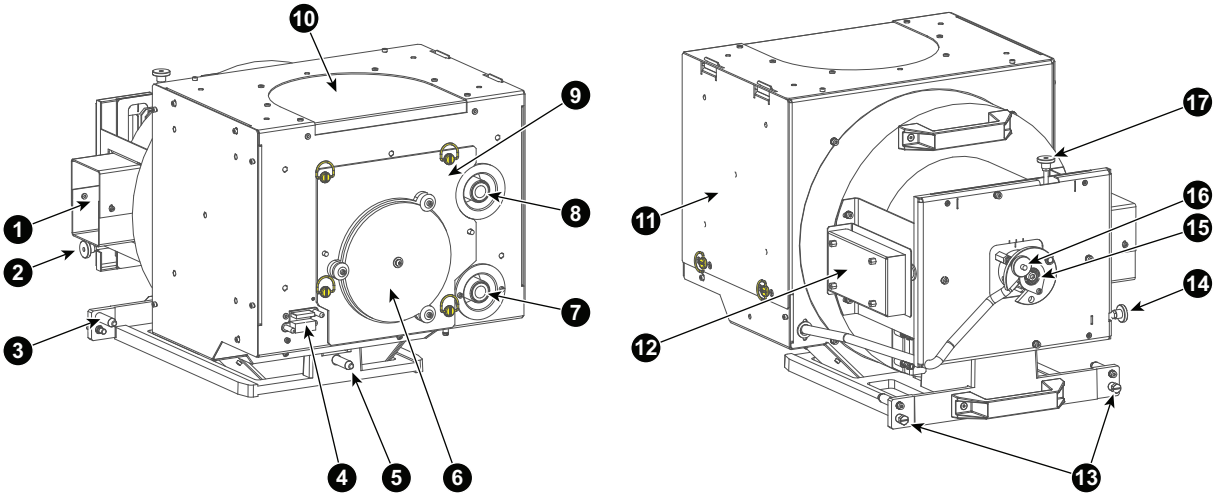


Image 6–2

1 Air inlet cathode cooling.
2 Adjustment screw horizontal lamp alignment.
3 Positioning pin.
4 Connection Lamp Info module.
5 Positioning pin.
6 UV blocker.
7 Cathode connection with SPG.
8 Anode connection with SPG.
9 Removable front cover.
10 Air out let.
11 Removable side cover.
12 Lamp Info module.
13 Lamp House fixation screw.
14 Adjustment screw horizontal lamp alignment.
15 Lamp cathode fixation screw.
16 Adjustment screw for lamp Z-alignment.
17 Adjustment screw vertical lamp alignment.

## Parts identification manual Lamp House (second generation)

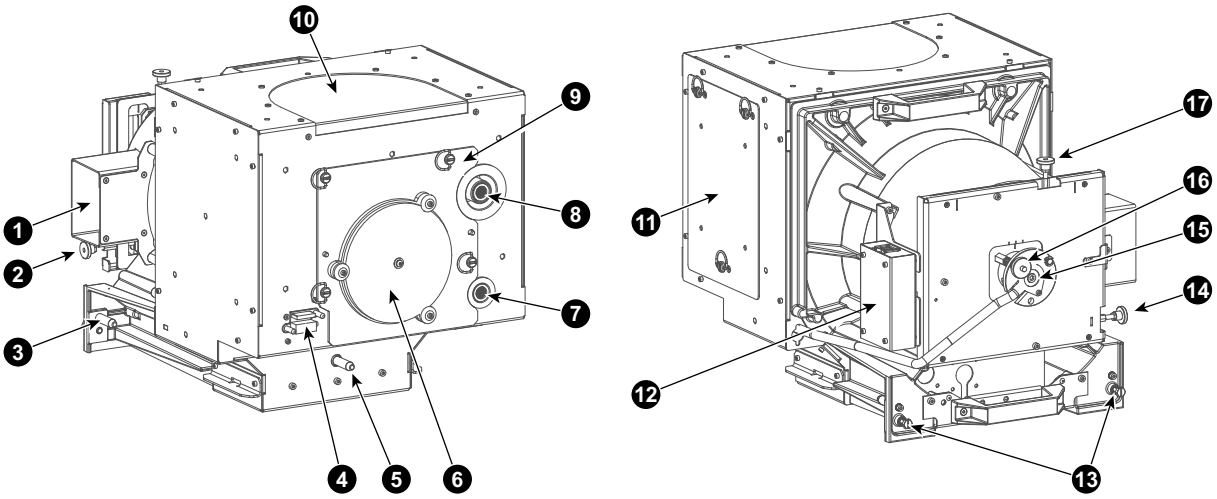


Image 6–3

1 Air inlet cathode cooling.
2 Adjustment screw horizontal lamp alignment.
3 Positioning pin.
4 Connection Lamp Info module.
5 Positioning pin.
6 UV blocker.
7 Cathode connection with SPG.
8 Anode connection with SPG.
9 Removable front cover.
10 Air out let.
11 Removable side cover.
12 Lamp Info module.
13 Lamp House fixation screw.
14 Adjustment screw horizontal lamp alignment (latest models with lock nut).
15 Lamp cathode fixation screw.
16 Adjustment screw for lamp Z-alignment.
17 Adjustment screw vertical lamp alignment (latest models with lock nut).

## Parts identification Motorized Lamp House

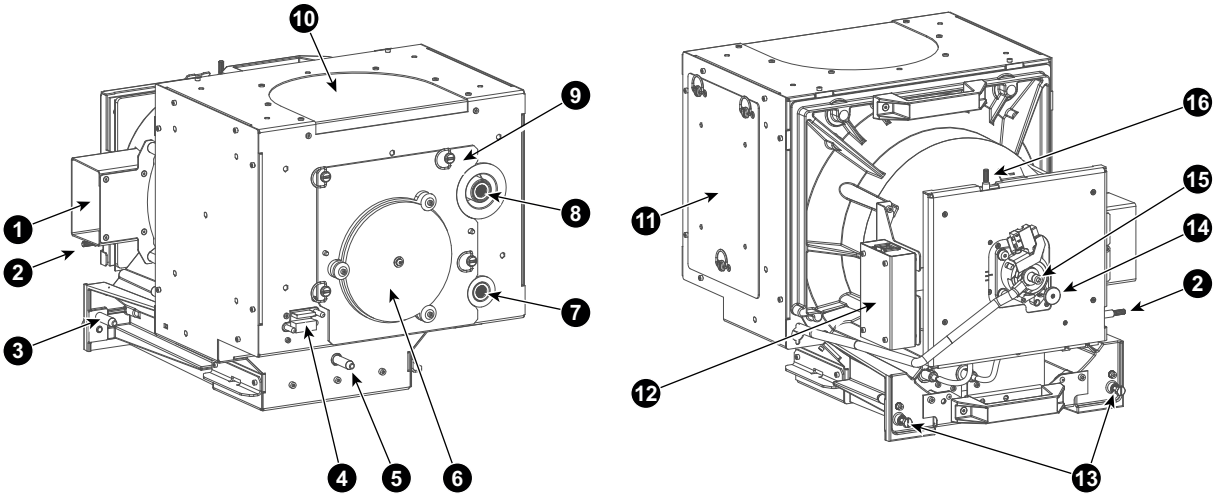


Image 6–4

1 Air inlet cathode cooling.
2 Adjustment screw horizontal lamp alignment.
3 Positioning pin.
4 Connection Lamp Info module.
5 Positioning pin.
6 UV blocker.
7 Cathode connection with SPG.
8 Anode connection with SPG.
9 Removable front cover.
10 Air out let.
11 Removable side cover.
12 Lamp Info module.
13 Lamp House fixation screw.
14 Adjustment screw for lamp Z-alignment.
15 Lamp cathode wire fixation screw.
16 Adjustment screw vertical lamp alignment.

## S/M Lamp House versus XL Lamp House for DP2K and DP4K B series

There exist two Lamp Houses for the DP2K and DP4K B series projectors. One **S/M Lamp House** for small and medium lamps sizes and one **XL Lamp House** for large lamp sizes.

Externally both Lamp Houses looks the same but inside the XL Lamp House houses a physical bigger xenon lamp which requires a bigger **Reflector** inside the Lamp House. The S/M Lamp House has a smaller Reflector inside and contains an **adaptation piece** on the inner anode connection pin. Furthermore, the integrated **anode support** on the UV Blocker is shorter and contains a spring for the XL Lamp House.

Both Lamp Houses fit in all DP2K and DP4K B series projectors. However, not all lamps are supported by all DP2K and DP4K B series projector. For that it is important to check with the Communicator software which lamps are supported per projector type.

Take into account that both Lamp Houses uses different anode and cathode adaptors. See chapters “Supported xenon lamps for the XL Lamp House”, page 75, and “Supported xenon lamps for the S/M Lamp House”, page 77.

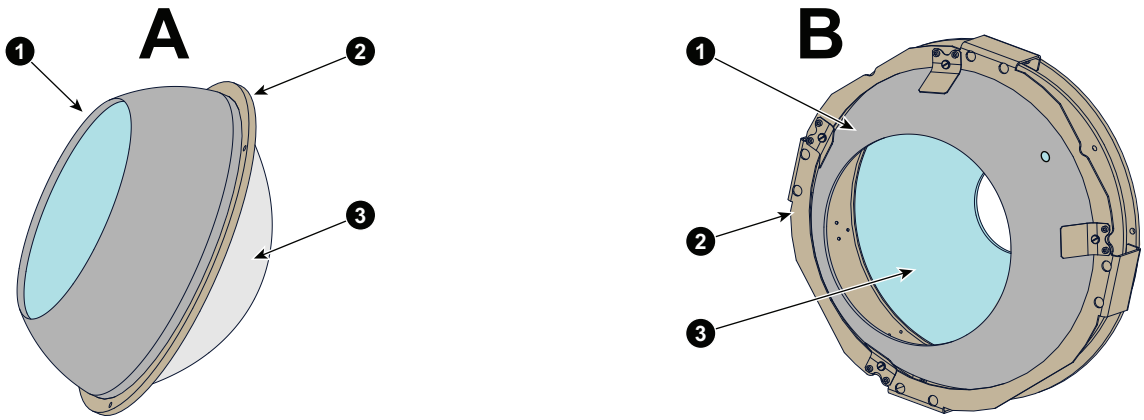


Image 6–5

**A1** Spheric glass mirror S/M Lamp House
**A2** Metal mounting ring S/M Lamp House
**A3** Elliptic glass mirror S/M Lamp House

**B1** Spheric glass mirror XL Lamp House
**B2** Metal mounting ring XL Lamp House
**B3** Elliptic glass mirror XL Lamp House

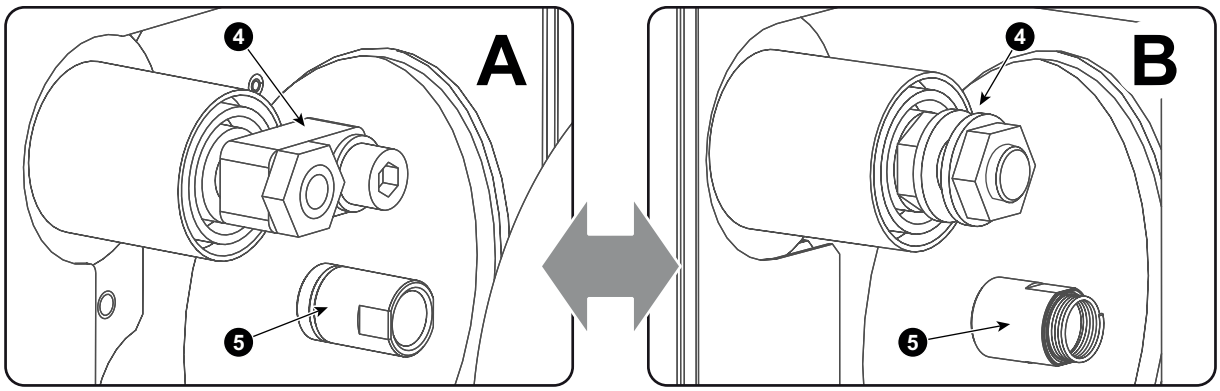


Image 6–6

**A4** Anode connection S/M Lamp House
**A5** Anode support (long) S/M Lamp House
**B4** Anode connection XL Lamp House
**B5** Anode support (short) XL Lamp House (Motorized)

## Protective packaging

The xenon lamp is packed in a protective container or wrapped in a protective cloth. Never remove this protective container or protective cloth without wearing adequate protective clothing (face shield, clean cotton glovers, welder's jacket).

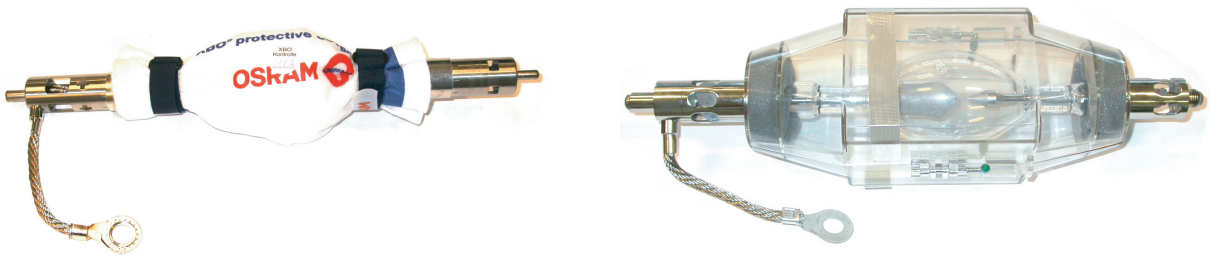


Image 6–7 Left: Xenon lamp wrapped in protective cloth. Right: Xenon lamp packed in protective container.

## Lamp strike policy and lamp warning/error policy versus the lamp runtime

- The projector issues a lamp run time notification message (end have blue status LEDs) approximately 30 hours before the maximum lamp runtime occurs.
- The projector issues a lamp run time notification message (end have blue status LEDs) when the maximum lamp runtime occurs.
- The projector will always try to strike the lamp, independent of the lamp runtime.

# 6.2 Supported xenon lamps for the XL Lamp House

Anode and cathode lamp adapters are used to position the arc of the xenon lamp in the middle of the reflector inside the lamp house. The size of the xenon lamp vary from type to type. Because of that different lamp adapters are required. Futhermore, some lamp types require an anode adaptation bushing to fit precisely into the anode support assembly. The table below shows for each supported xenon lamp which anode/cathode adapters have to be used and if an anode adaptation bushing is required.

All lamps and adapters in the table below must be used with the **XL Lamp House** (either manual or motorized). Note that the maximum lamp power the projector delivers depends on the type of projector and the installed lamp. Prior to install the lamp it's important to check with the Communicator software if the lamp is listed in the list of supported lamps for this projector.

### Supported lamp types and their respective anode/cathode adapters for the XL Lamp House:

| Lamp type / Supplier | Cathode adapter | Anode adapter | Anode adaptation bushing | Barco Order No. |
|---|---|---|---|---|
| 3000W DHS OFR OSRAM XBO | R8436061K | R859987K | - | **R9855950** |
| 4500W DHP-OFR OSRAM XBO | R8436081K | (R859986K)* | - | **R9855949** |
| 6000W DHP-OFR OSRAM XBO | R8436081K | - | (R864132K)* | **R98064901** |
| 6500W DHP-OFR OSRAM XBO | R8436081K | - | (R864132K)* | **R9806860** |
| DXL-30BA USHIO | R859984K | R859985K | - | **R9855953** |
| DXL-45BA USHIO | R8436111K | - | - | **R9855952** |
| DXL-60BA2 USHIO | R8436111K | - | - | **R9806520** |
| DXL-65BA USHIO | R8436111K | - | - | **R9855951** |
| DXL-65BA2 USHIO | R8436111K | - | - | **R9855962** |
| DXL-70BA USHIO | R8436111K | - | - | **R9855966** |
| XDC6500B PHILIPS | R8436081K | - | R864132K | **R9856380** |

(*) Only required for lamps produced before October 2015.

**WARNING:** Always use the right adapter(s) for the xenon lamp. Neglecting this may result in poor performance of the lamp and damage to the xenon lamp and Lamp House. Some adapters looks the same, therefore check the engraved item number upon the adapter to ensure you uses the right adapter.

## Anode adapters and adaptation bushing

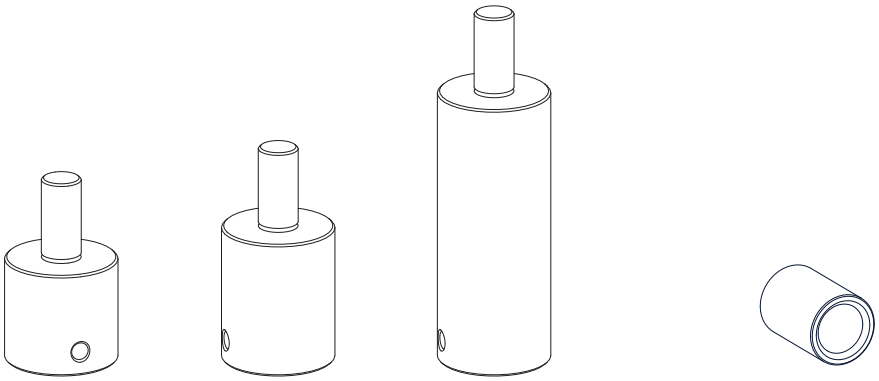

*R859986K* *R859985K* *R859987K* *R864132K*

Image 6–8

## Cathode adapters for manual Lamp House

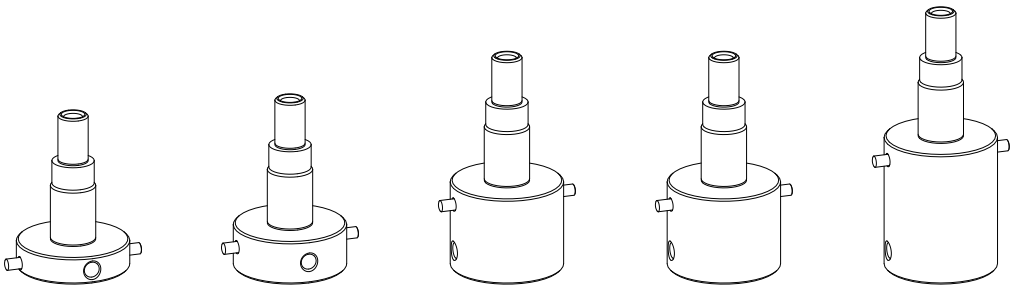

R8436101K R8436081K R859984K R8436111K R8436061K

Image 6–9

The shortest cathode adapter R8436101K is no longer needed for xenon lamps supported by Barco. For that this adapter has become obsolete.

# 6.3 Supported xenon lamps for the S/M Lamp House

## Cathode adaptor

A cathode adaptor is required to mount the xenon lamp in the S/M Lamp House. The cathode adapter has to be mounted on the cathode side of the xenon lamp prior to mounting the lamp in to the Lamp House. The purpose of the cathode adapter is to position the arc of the xenon lamp in the middle of the reflector inside the Lamp House. Note that there is no anode adaptor for the S/M Lamp House.

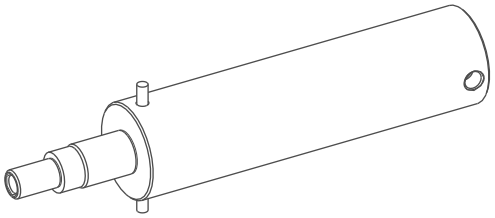

Image 6–10 Cathode adapter S/M Lamp House (**R865555K**)

All lamps and adapters in the table below must be used with the **S/M Lamp House** (either manual or motorized). Note that the maximum lamp power the projector delivers depends on the type of projector and the installed lamp. Prior to install the lamp it's important to check with the Communicator software if the lamp is listed in the list of supported lamps for this projector.

## Supported lamp types and cathode adapter for the S/M Lamp House:

| Lamp type<br>Supplier | Cathode adapter<br>S/M Lamp House | Barco Order No. |
|---|---|---|
| 4kW DHP OSRAM XBO | R865555K | **R9855937** |
| 3kW DHP OSRAM XBO | R865555K | **R9855938** |
| 2kW DHP OSRAM XBO | R865555K | **R9855956** |
| 1200W DHP OSRAM XBO | R865555K | **R9855959** |
| DXL40BAF USHIO | R865555K | **R9855939** |
| DXL30BAF USHIO | R865555K | **R9855940** |
| DXL20BAF USHIO | R865555K | **R9855955** |
| DXL12BAF USHIO | R865555K | **R9855961** |
| XDC-4000B PHILIPS | R865555K | **R9856370** |

**WARNING:** Always use the correct Cathode adapter for the xenon lamp in the Lamp House. Neglecting this may result in poor performance of the lamp and damage to the xenon lamp and Lamp House. Some adapters looks the same, therefore check the engraved item number upon the adapter to ensure you use the right adapter.

# 6.4 Removal of the Lamp House

**WARNING:** This procedure may only be performed by qualified technical service personnel.

**WARNING:** The Lamp House is very hot after operation. To avoid burns, let the projector cool down for at least 15 minutes before proceeding to remove the Lamp House.

**CAUTION:** Due to its high internal pressure, the lamp may explode in either hot or cold states if improperly handled.

## Required tools

10mm nut driver or flat screw driver.

## How to remove the Lamp House from the projector?

1. Make sure the projector is switched off and cooled down.
2. Remove the cover of the Lamp House compartment.
3. Release the two retaining screws (reference 1 Image 6–11) at the base of the Lamp House. Use a 10mm nut driver or a flat screw driver.
4. Remove the Lamp House as follows:
   1. Grip the Lamp House by the bottom handle and partially slide it out of the lamp compartment
   2. Grip the Lamp House by both handles and remove it completely from the projector.
   3. Place the Lamp House on a stable support.

   *Caution:* Be aware of the weight of the lamp assembly. Take the necessary precautions to avoid personal injury.

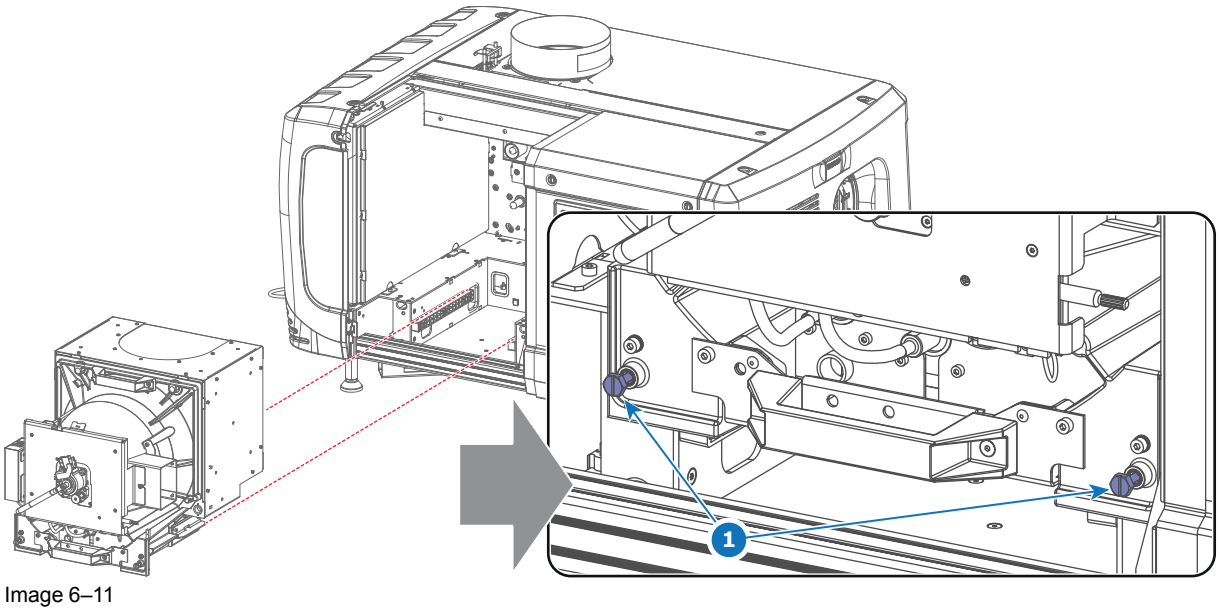


Image 6–11

This procedure is illustrated with a Motorized Lamp House. Nevertheless, the instructions are also applicable for the manual Lamp House.

# 6.5 Removal of the xenon lamp from Lamp House

**WARNING:** DO NOT PERMIT UNAUTHORIZED PERSONNEL TO PERFORM OR ATTEMPT ANY PHASE OF XENON LAMP HANDLING OR SERVICE. ONLY TRAINED AND QUALIFIED TECHNICAL SERVICE PERSONNEL ARE ALLOWED TO HANDLE THE XENON LAMP.

**WARNING:** This procedure may only be performed by qualified technical service personnel.

**CAUTION:** Xenon compact arc lamps are highly pressurized. When ignited, the normal operating temperature of the bulb increases the pressure to a level at which the bulb may explode if not handled in strict accordance to the manufacturer's instructions. The bulb is stable at room temperature, but may still explode if dropped or otherwise mishandled. Whenever the lamp house, containing a xenon lamp, has to be dismantled or whenever the protective container or cloth has to be removed from the xenon lamp, authorized protective clothing MUST be worn!

**WARNING:** Always wear face protection (full face shield) when handling xenon lamps.

**WARNING:** Always wear protective clothing (welder's jacket) when handling xenon lamps.

**WARNING:** Always wear clean leather gloves with wrist protectors when handling xenon lamps.

## Required tools

- Two open-end wrenches of 22mm.
- 5mm Allen wrench.
- Lamp protective container or protective cloth with two binders.
- Flat blade screw driver.
- 2.5mm Allen wrench.

## How to remove the xenon lamp out of the Lamp House?

1. Remove the hexagon socket head cap screw (reference 1 Image 6–12) which fastens the cathode of the xenon lamp. Use a 5 mm Allen wrench. Do not release the cathode wire lug. The screw contains a spring washer and a plain washer (reference 2 & 3 Image 6–12).

   *Note:* The cathode wire remains in its position after the screw and two washers are removed.

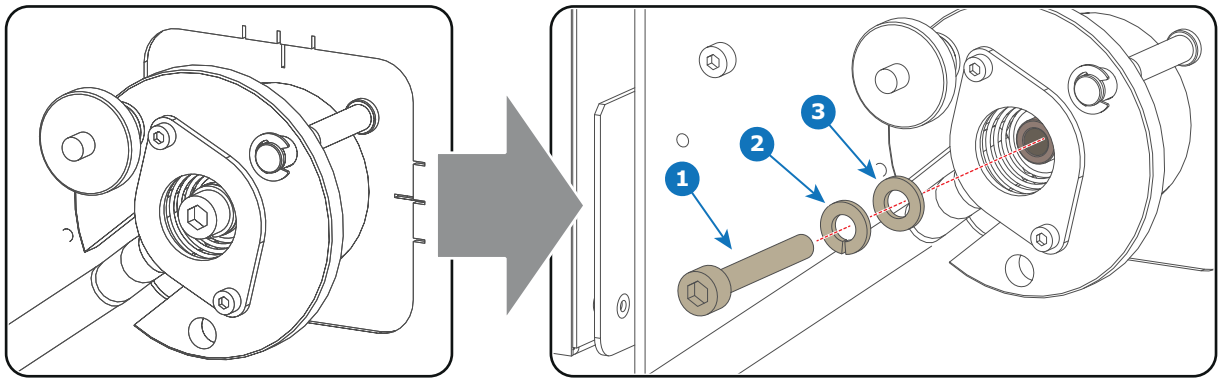


Image 6–12

2. Remove the side cover of the Lamp House by releasing the three quarter turn screws (reference 4 Image 6–13) of the side cover as illustrated.

   *Caution:* Ensure that you wear protective clothing, a full face shield and protective gloves.

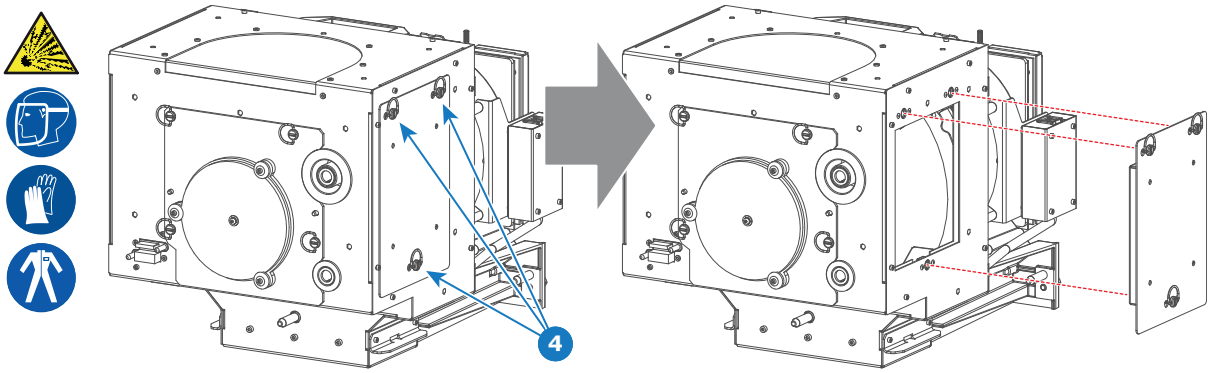


Image 6–13

3. Release the four quarter turn screws (reference 5 Image 6–14) of the UV blocker assembly as illustrated. Make sure that the anode support remains in its position while releasing the screws.

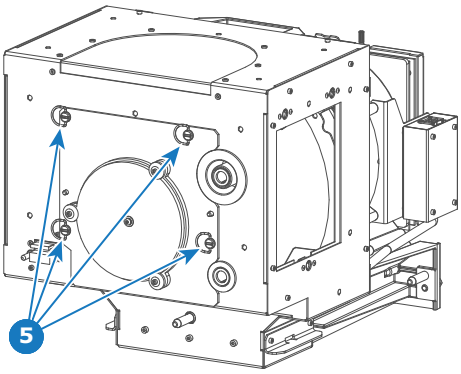


Image 6–14

4. Support the xenon lamp inside the Lamp House with one hand while removing the UV blocker assembly from the lamp house.

   *Warning:* Supporting the xenon lamp with one hand prevents the xenon lamp from dropping and colliding with the chassis of the Lamp House.

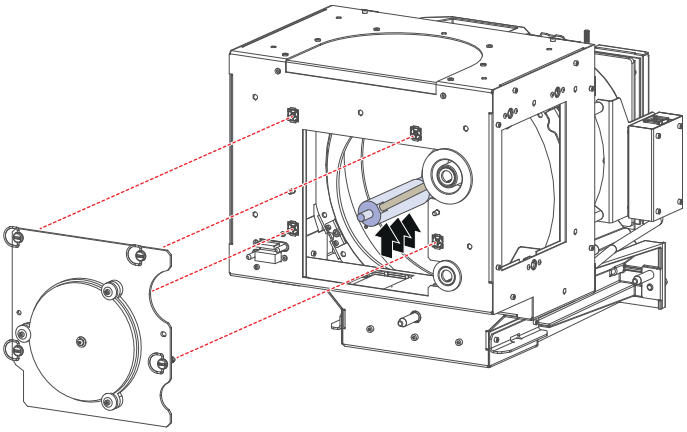

Image 6–15

5. Slide out the anode connector from the Lamp House. The anode connector remains attached with the lamp anode wire.

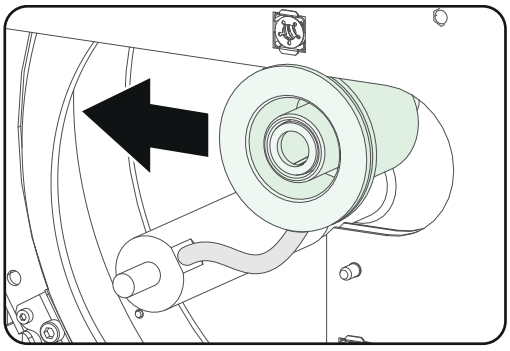

Image 6–16

6. Gently remove the xenon lamp together with the anode socket out of the Lamp House. Do not use excessive force upon the xenon lamp. Normally the xenon lamp will easily slide out the cathode socket of the Lamp House.

   *Warning:* Supporting the xenon lamp with one hand while pulling it out with other hand prevents it from bumping against the chassis of the Lamp House.

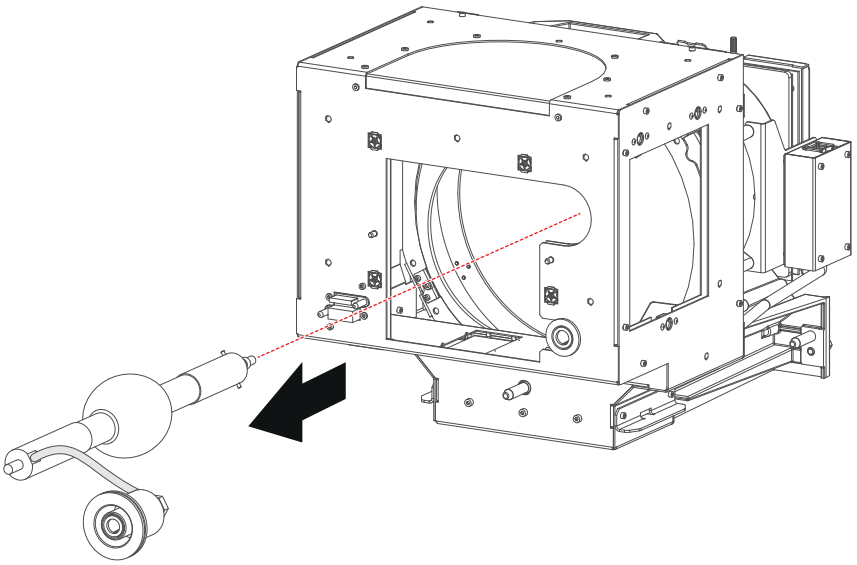

Image 6–17

7. Place the xenon lamp in its protective container or wrap the xenon lamp in a protective cloth and secure with two binders.

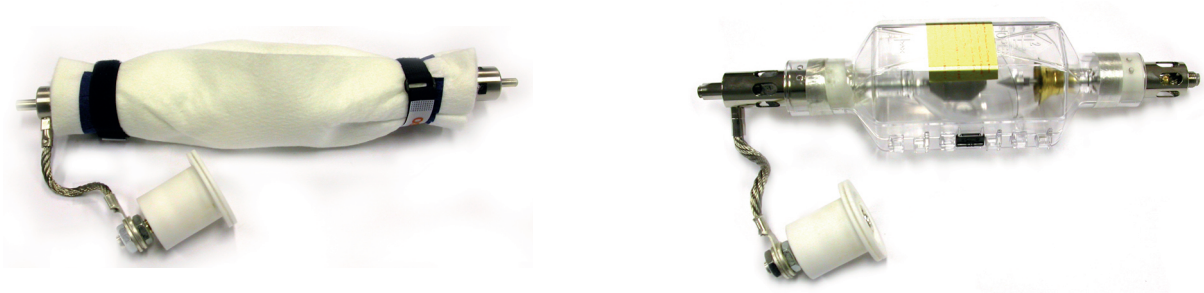

Image 6–18 Left: Xenon lamp wrapped in a protective cloth. Right: Xenon lamp captured in a protective container.

8. Remove the anode wire lug (reference 7 Image 6–19) from the anode socket. Use for that two open ended spanners of 22 mm. Hold the first nut (reference 5) with one spanner while releasing the second nut (reference 9 Image 6–19) with the other spanner.

   *Tip:* Place the flat washer and the nut back on the rod after the lug is removed.

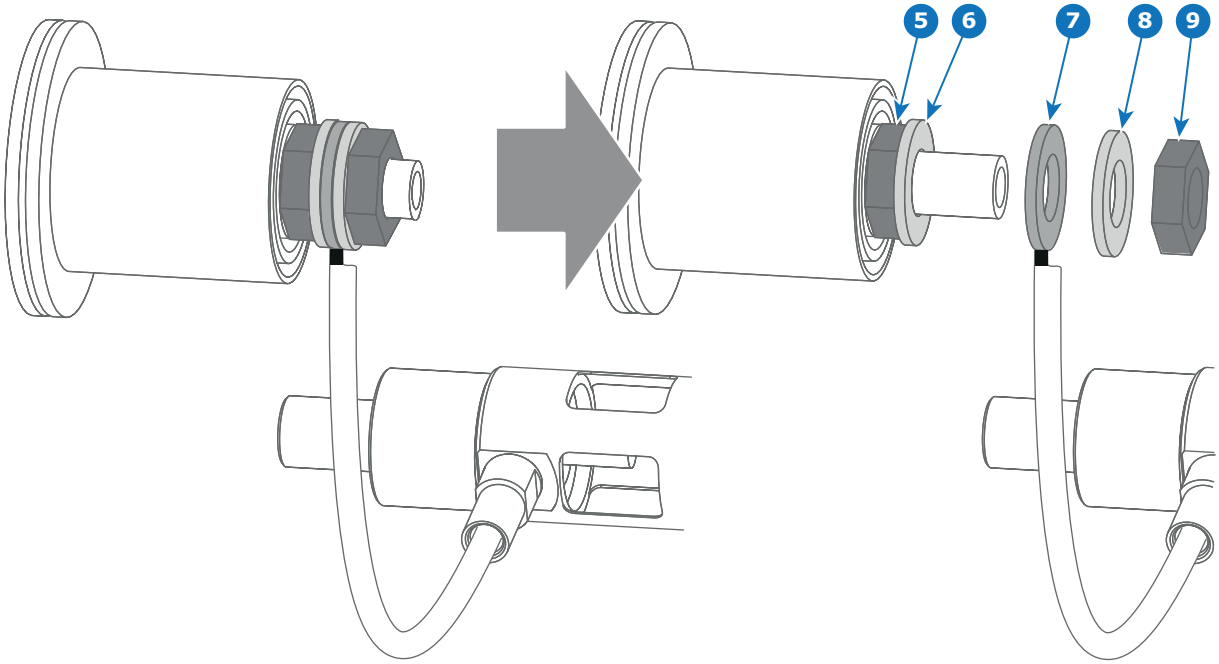


Image 6–19

**9.** Remove the cathode adapter from the xenon lamp by releasing the hexagon socket head set screw (reference 9 Image 6–20) of the adapter as illustrated. Use a 2.5mm Allen wrench.

*Note:* Some xenon lamps have a cathode pin with screw threat (reference 10 Image 6–20.

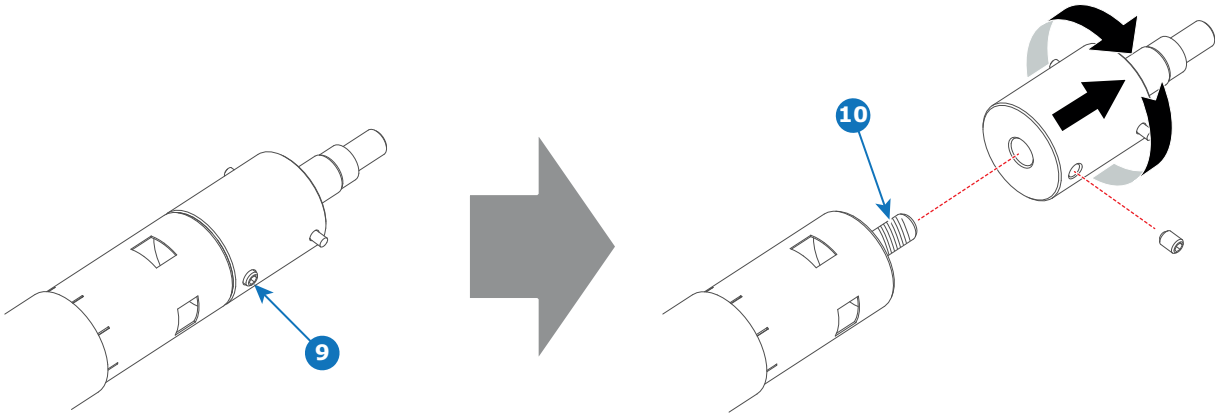


Image 6–20

**10.** Remove the anode adapter from the xenon lamp by releasing the hexagon socket head set screw (reference 13 Image 6–21) of the lamp adapter as illustrated. Use for that a 2.5mm Allen wrench.

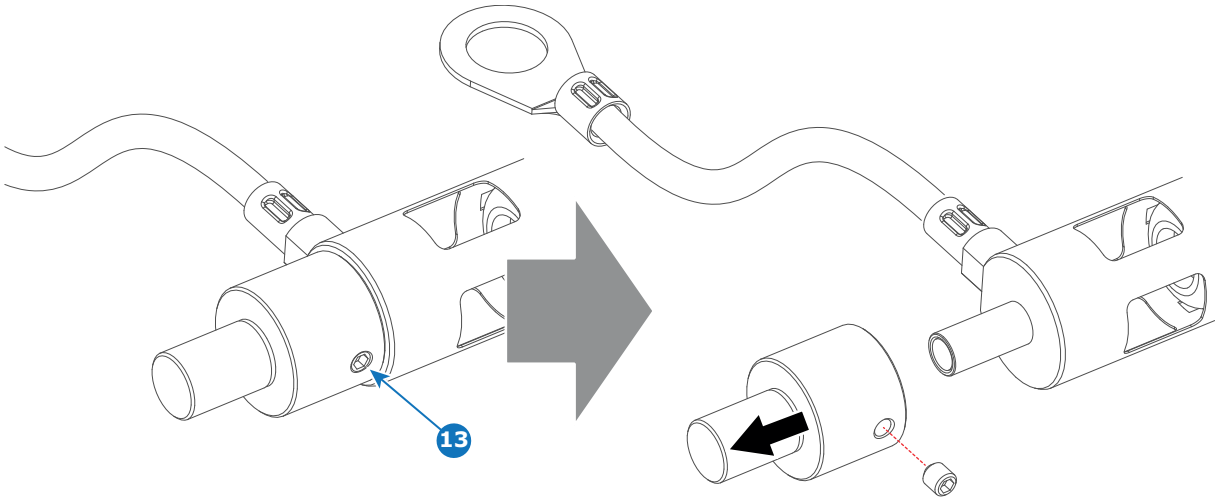


Image 6–21

Reinstall the UV blocker assembly and the side cover in case you do not intend to install another xenon lamp immediately in the Lamp House.

**CAUTION: Expired xenon lamps**.
Dispose of expired bulbs that are beyond warranty according the national regulations. See also related user manual of the lamp supplier for more guidance.

**CAUTION:** Small amounts of radioactive material (< 1000 Bq per lamp) are deliberately added to Xenon lamps for functional reasons. These lamps are manufactured under regulatory control as consumer product according to IAEA basic safety standard BSS 115. Disposal according to national regulations is required e.g. in Europe covered by WEEE regulation. See also related user manual of the lamp supplier for more guidance.

When returning a xenon lamp for warranty adjustment, pack it in its original shipping container. Complete and return all required warranty information.

# 6.6 Removal of the xenon lamp from manual S/M Lamp House

**WARNING:** DO NOT PERMIT UNAUTHORIZED PERSONNEL TO PERFORM OR ATTEMPT ANY PHASE OF XENON LAMP HANDLING OR SERVICE. ONLY TRAINED AND QUALIFIED TECHNICAL SERVICE PERSONNEL ARE ALLOWED TO HANDLE THE XENON LAMP.

**WARNING:** This procedure may only be performed by qualified technical service personnel.

**CAUTION:** Xenon compact arc lamps are highly pressurized. When ignited, the normal operating temperature of the bulb increases the pressure to a level at which the bulb may explode if not handled in strict accordance to the manufacturer's instructions. The bulb is stable at room temperature, but may still explode if dropped or otherwise mishandled. Whenever the lamp house, containing a xenon lamp, has to be dismantled or whenever the protective container or cloth has to be removed from the xenon lamp, authorized protective clothing MUST be worn!

**WARNING:** Always wear face protection (full face shield) when handling xenon lamps.

**WARNING:** Always wear protective clothing (welder's jacket) when handling xenon lamps.

**WARNING:** Always wear clean leather gloves with wrist protectors when handling xenon lamps.

## Required tools

- 5mm Allen wrench.
- Lamp protective container or protective cloth with two binders.
- Flat blade screw driver.
- 2.5mm Allen wrench.

## How to remove the xenon lamp out of the manual S/M Lamp House?

1. Remove the hexagon socket head cap screw (reference 1 Image 6–22) which fasten the cathode of the xenon lamp. Use a 5 mm Allen wrench. Do not release the cathode wire lug. The screw contains a spring washer and a plain washer (reference 2 & 3 Image 6–22).

   *Note:* The cathode wire remains in its position after the screw and two washers are removed.

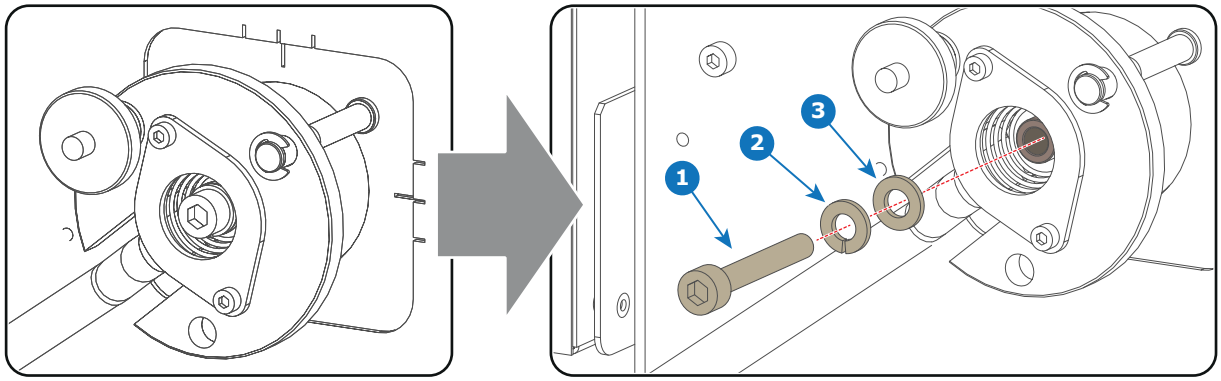


Image 6–22

2. Remove the side cover of the Lamp House by releasing the three quarter turn screws (reference 4 Image 6–23) of the side cover as illustrated.

*Caution:* Ensure that you wear protective clothing, a full face shield and protective gloves.

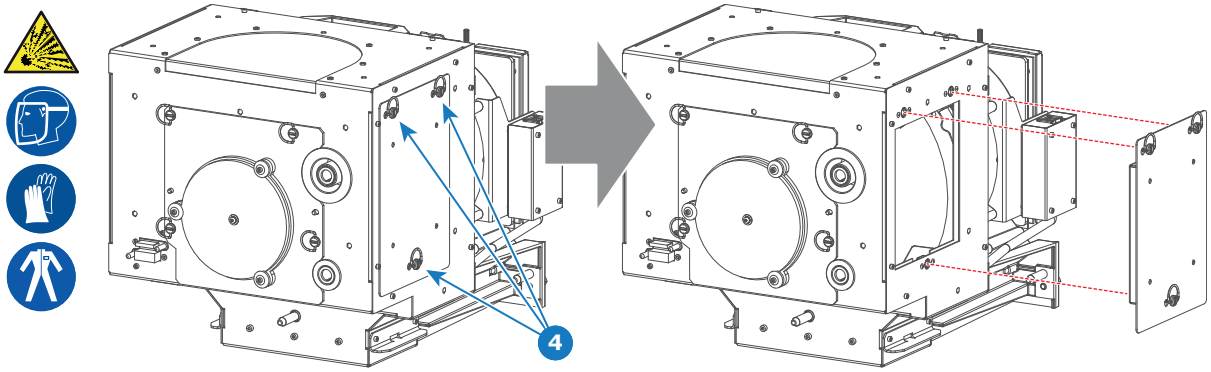


Image 6–23

3. Release the four quarter turn screws (reference 5 Image 6–24) of the UV blocker assembly as illustrated. Make sure that the anode support remains in its position while releasing the screws.

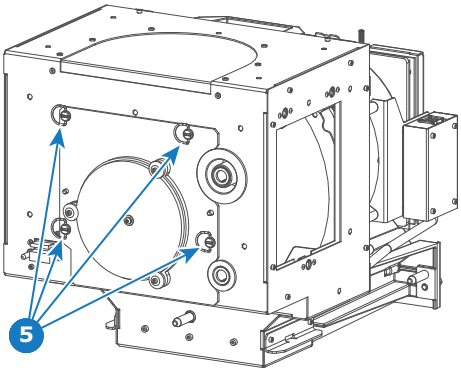


Image 6–24

4. Support the xenon lamp inside the Lamp House with one hand while removing the UV blocker assembly from the lamp house.

*Warning:* Supporting the xenon lamp with one hand prevents the xenon lamp from dropping and colliding with the chassis of the Lamp House.

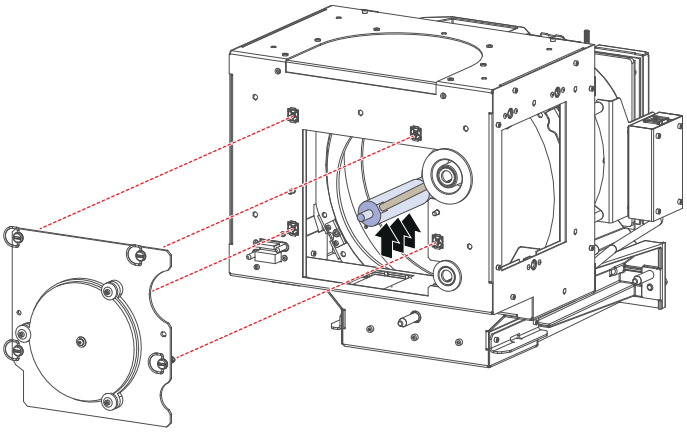

Image 6–25

5. Slide out the anode connector from the Lamp House. The anode connector remains attached with the lamp anode wire.

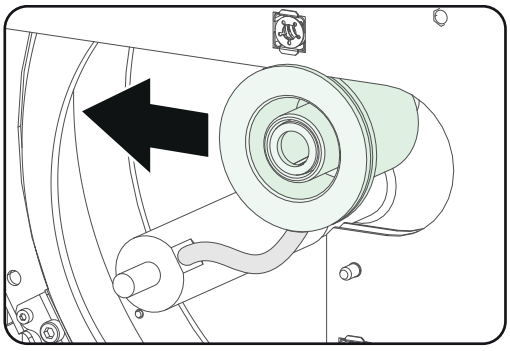

Image 6–26

6. Gently remove the xenon lamp together with the anode socket out of the Lamp House. Do not use excessive force upon the xenon lamp. Normally the xenon lamp will easily slide out the cathode socket of the Lamp House.

   *Warning:* Supporting the xenon lamp with one hand while pulling it out with other hand prevents it from bumping against the chassis of the Lamp House.

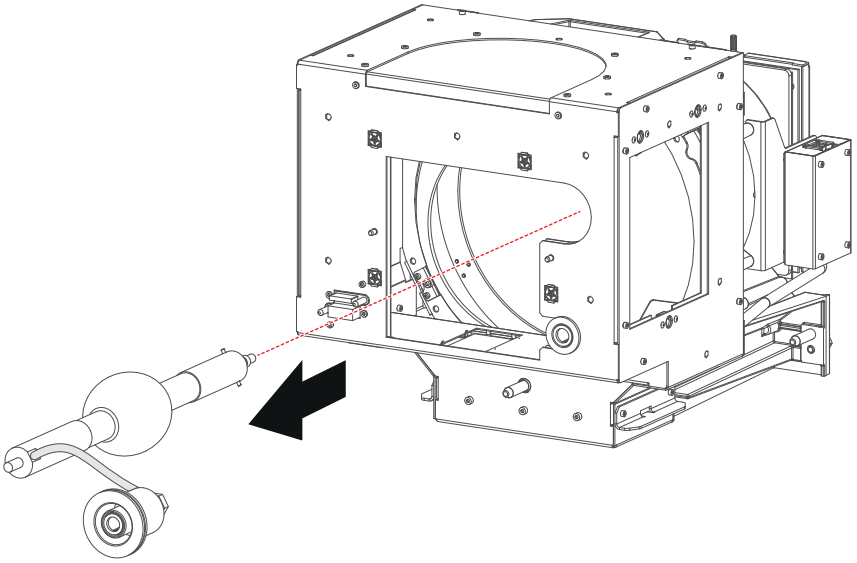

Image 6–27

7. Place the xenon lamp in its protective container or wrap the xenon lamp in a protective cloth and secure with two binders.

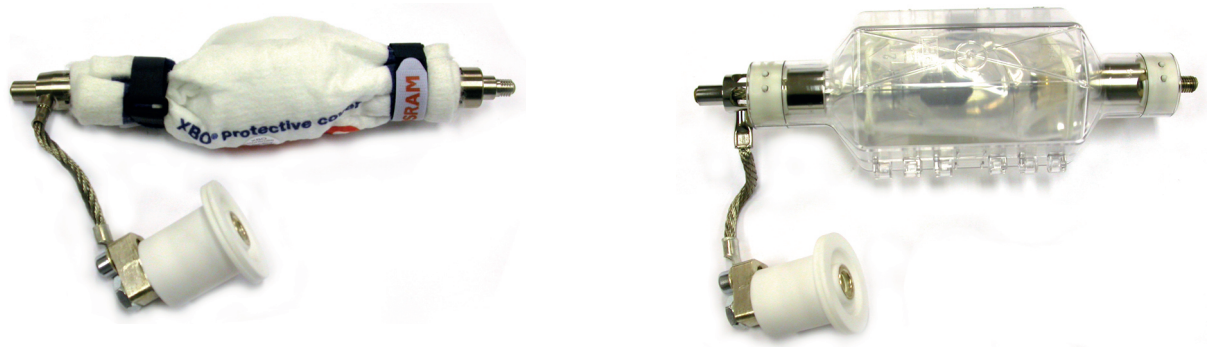

Image 6–28 Left: Xenon lamp wrapped in a protective cloth. Right: Xenon lamp captured in a protective container.

8. Remove the anode wire lug (reference 6 Image 6–29) from the anode socket as illustrated. Use a 8mm Allen wrench.

   *Tip:* Place the flat washer and bolt (reference 7 & 8 Image 6–29) back on its place after the lug is removed.

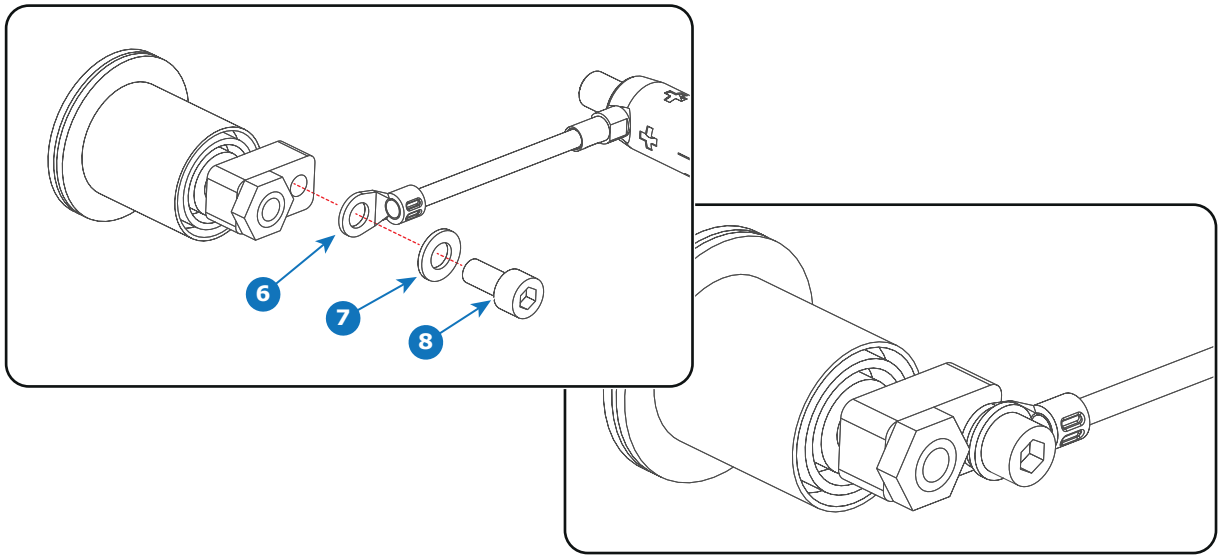


Image 6–29

9. Remove the cathode adapter from the xenon lamp by releasing the hexagon socket head cap screw (reference 9 Image 6–30) of the adapter as illustrated. Use a 5mm Allen wrench.

*Note:* Some xenon lamps have a cathode pin with screw threat (reference 10 Image 6–30).

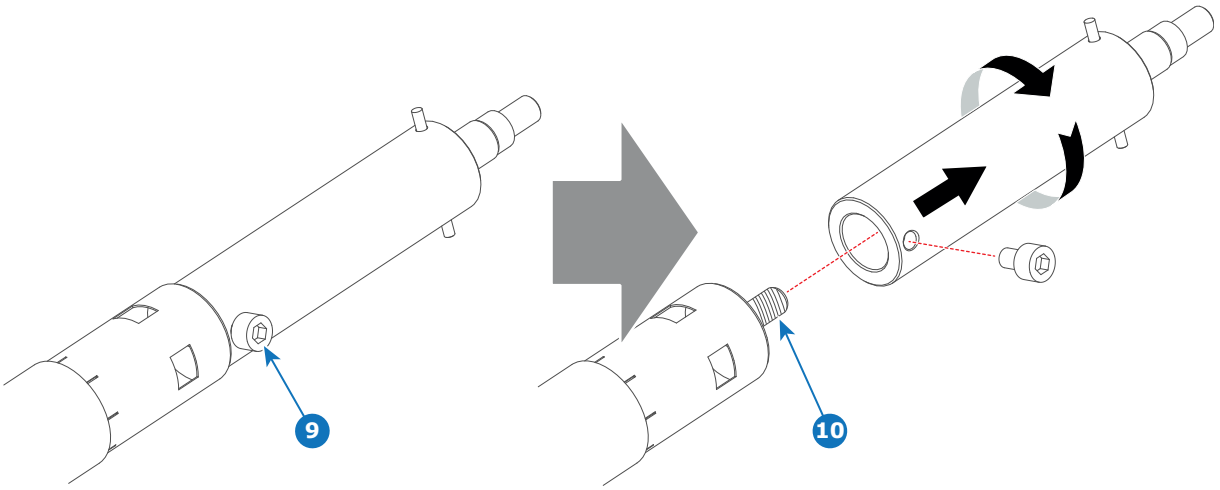


Image 6–30

Reinstall the UV blocker assembly and the side cover in case you do not intend to install another xenon lamp immediately in the Lamp House.

**CAUTION: Expired xenon lamps**.
Dispose of expired bulbs that are beyond warranty according the national regulations. See also related user manual of the lamp supplier for more guidance.

**CAUTION:** Small amounts of radioactive material (< 1000 Bq per lamp) are deliberately added to Xenon lamps for functional reasons. These lamps are manufactured under regulatory control as consumer product according to IAEA basic safety standard BSS 115. Disposal according to national regulations is required e.g. in Europe covered by WEEE regulation. See also related user manual of the lamp supplier for more guidance.

When returning a xenon lamp for warranty adjustment, pack it in its original shipping container. Complete and return all required warranty information.

# 6.7 Installation of the xenon lamp in manual XL Lamp House

**WARNING:** DO NOT PERMIT UNAUTHORIZED PERSONNEL TO PERFORM OR ATTEMPT ANY PHASE OF XENON LAMP HANDLING OR SERVICE. ONLY TRAINED AND QUALIFIED TECHNICAL SERVICE PERSONNEL ARE ALLOWED TO HANDLE THE XENON LAMP.

**WARNING:** This procedure may only be performed by qualified technical service personnel.

**CAUTION:** Xenon compact arc lamps are highly pressurized. When ignited, the normal operating temperature of the bulb increases the pressure to a level at which the bulb may explode if not handled in strict accordance to the manufacturer's instructions. The bulb is stable at room temperature, but may still explode if dropped or otherwise mishandled. Whenever the lamp house, containing a xenon lamp, has to be dismantled or whenever the protective container or cloth has to be removed from the xenon lamp, authorized protective clothing MUST be worn!

**WARNING:** Always wear face protection (full face shield) when handling xenon lamps.

**WARNING:** Always wear protective clothing (welder's jacket) when handling xenon lamps.

**WARNING:** Always wear clean leather gloves with wrist protectors when handling xenon lamps.

This procedure assumes that the anode support assembly and the side cover are already removed from the Lamp House due to the removal of the xenon lamp.

## Required tools

- Torque wrench with a 2.5mm Allen socket.
- 1.5mm Allen wrench.
- 22mm open-end wrench.
- Torque wrench with a 22mm hexagon socket.
- Torque wrench with a 5mm Allen socket.

## How to install the xenon lamp in the manual XL Lamp House?

1. Install the appropriate lamp cathode adapter on the cathode of the xenon lamp. Note that some xenon lamps have a cathode pin with screw threat (reference 10 Image 6–31). Screw the adaptor on the anode pin as far as possible. Make sure that there is full contact between the adapter flat surface and the lamp base. Fasten the set screw (reference 9 Image 6–31) of the cathode adapter with a torque of **2.5Nm** (1.84 lbf*ft). Use a torque wrench with a 2.5mm Allen socket.

   *Tip:* See supported xenon bulb lamps to know which cathode adapter your lamp requires.

   *Caution:* Ensure that the adaptor is clean. Periodically clean the adapter. Remove oxide from silver plated adaptor with standard household metal polish (E.g. Brasso).

   *Warning:* Install the cathode adapter prior to removing the protective container or protective cloth from the xenon lamp.

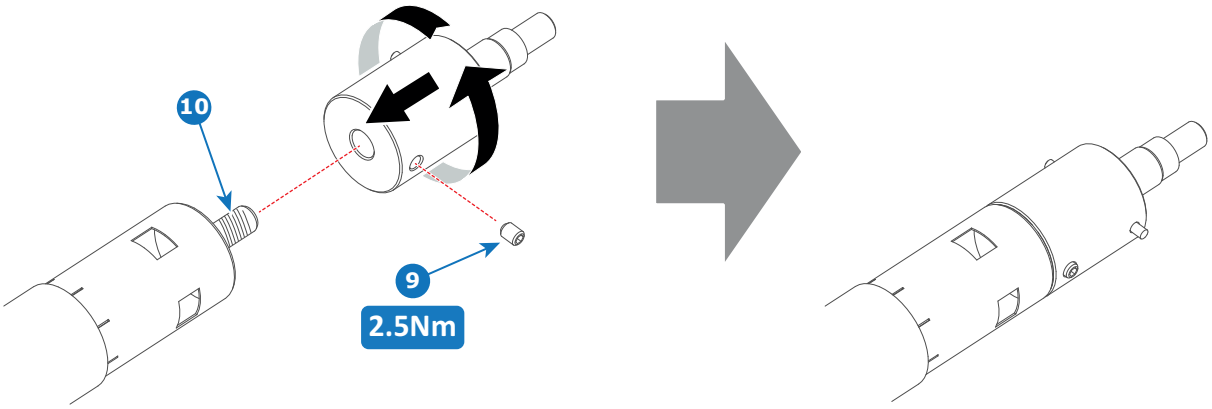


Image 6–31

2. Requires the xenon lamp an anode adapter?

   *Tip:* See supported xenon bulb lamps to know if your lamp requires an anode adapter.

   If yes, install the appropriate lamp anode adapter on the anode of the xenon lamp. Fasten the set screw (reference 13 Image 6–32) of the anode adapter with a torque of **2.5Nm** (1.84 lbf*ft). Use a torque wrench with a 2.5mm Allen socket. Make sure that there is full contact between the adapter flat surface and the lamp base.

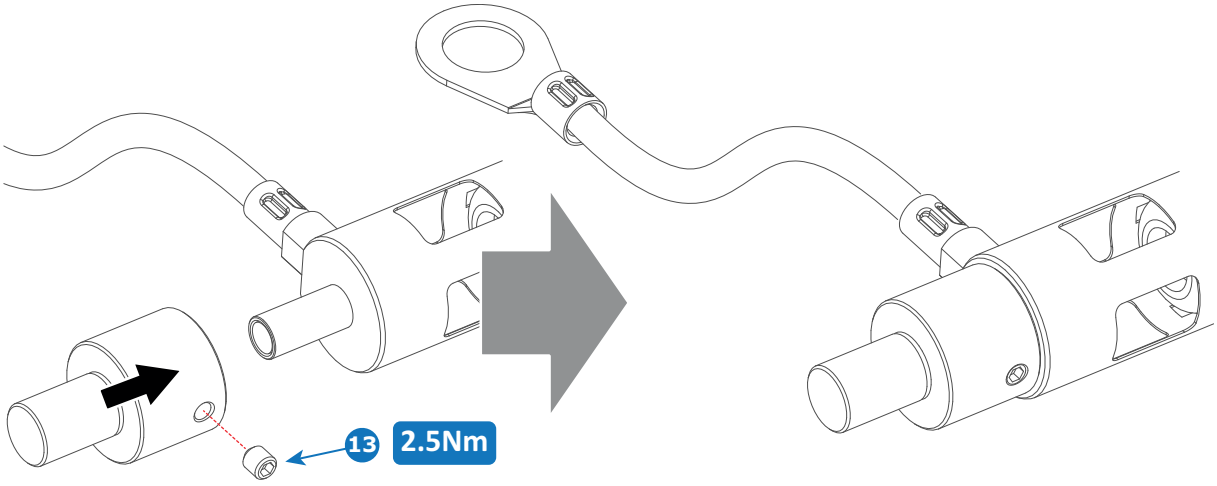


Image 6–32

   If no, make sure that there is no anode adapter installed on the anode of the xenon lamp.

3. Install the anode wire lug (reference 7 Image 6–33) on the anode socket of the Lamp House as illustrated. Use an open-end wrench of 22 mm to hold the first nut (reference 5 Image 6–33) while fastening the second nut (reference 9 Image 6–33) with a torque of **25Nm** (18.4 lbf*ft) using a torque wrench. Ensure that there is a flat washer (reference 6 & 8 Image 6–33) at both sides of the wire lug (reference 7 Image 6–33).

   *Warning:* A torque of **25Nm** (18.4 lbf*ft) must be applied to fasten the nuts. Make sure that there is no tension on the anode wire of the xenon lamp.

   *Caution:* Do not tighten the first nut against the connector housing. There must be some play (minimum 1 mm to maximum 4 mm). This is important to insert the Lamp House smoothly into the projector

   *Note:* Alter tightening the two nuts, the connector should still be “floating”.

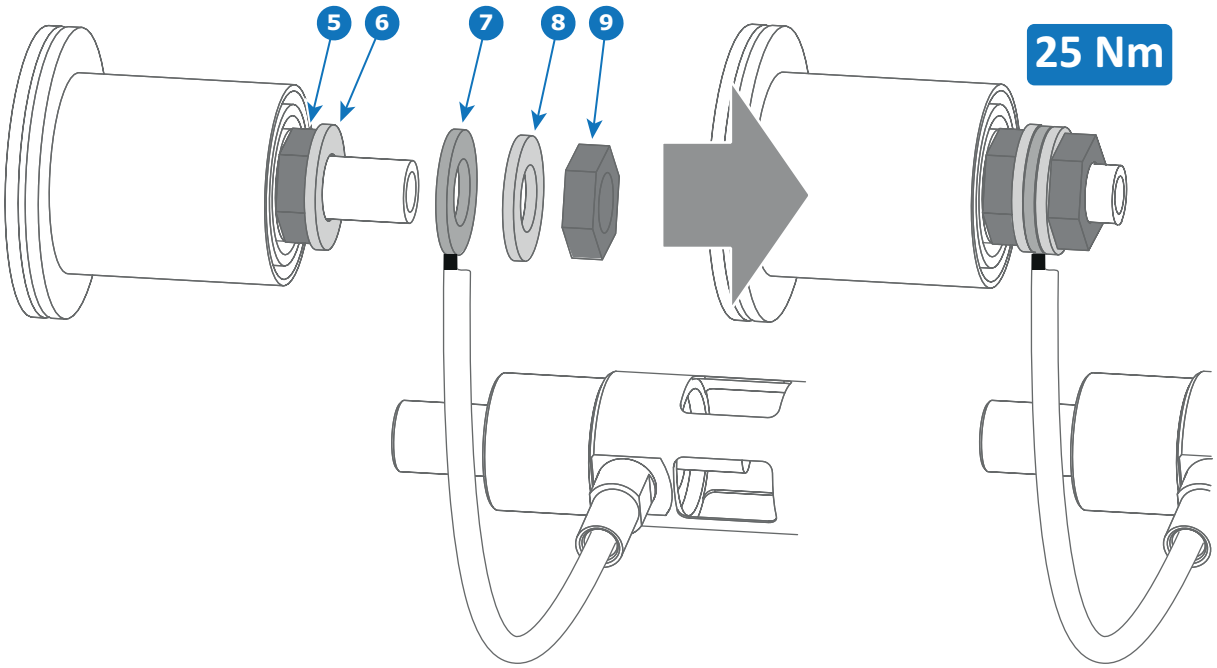


Image 6–33

*Tip:* Write down the serial number of the xenon lamp. You will need this while updating the lamp parameters after installation of the xenon lamp. The serial number of the xenon lamp is engraved in the neck of the xenon lamp.

4. Check the cathode connection inside the lamp house. Use an 22 mm open-end wrench to hold the first nut while fastening the second nut on the rod with a torque of **25Nm** (18.4 lbf*ft) using a torque wrench with 22 mm hexagon socket. Ensure that there is a flat washer at both sides of the wire lug. It's safer to do this check before the xenon lamp is installed to avoid accidental bumping against the xenon lamp.

   *Tip:* The cathode socket can easily pulled out from the Lamp House as a whole to perform this check.

   *Caution:* These cathode connections must be checked with every lamp change!

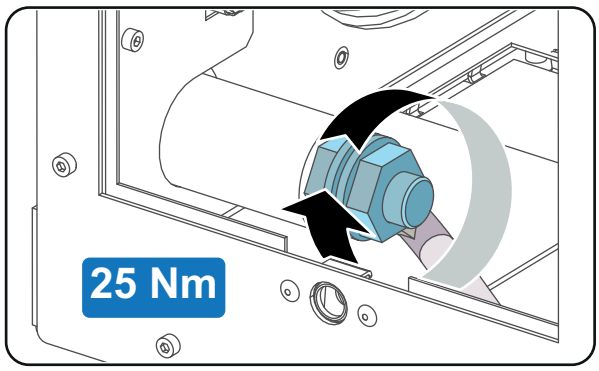


Image 6–34

5. Check the cathode connection inside the lamp house. Use an 22 mm open-end wrench to hold the first nut while fastening the second nut on the rod with a torque of **25Nm** (18.4 lbf*ft) using a torque wrench with 22 mm hexagon socket. Ensure that there is a flat washer at both sides of the wire lug.

   *Caution:* These cathode connections must be checked with every lamp change!

6. Requires the lamp an anode adaptation bushing inside the anode support?

   *Tip:* See supported xenon bulb lamps to know if your lamp requires an anode adaptation bushing.

If yes, insert the anode adaptation bushing (reference 12 Image 6–35 and Image 6–38) into the integrated anode support of the UV blocker.

If no, make sure that there is no anode adaptation bushing inserted into the anode support.

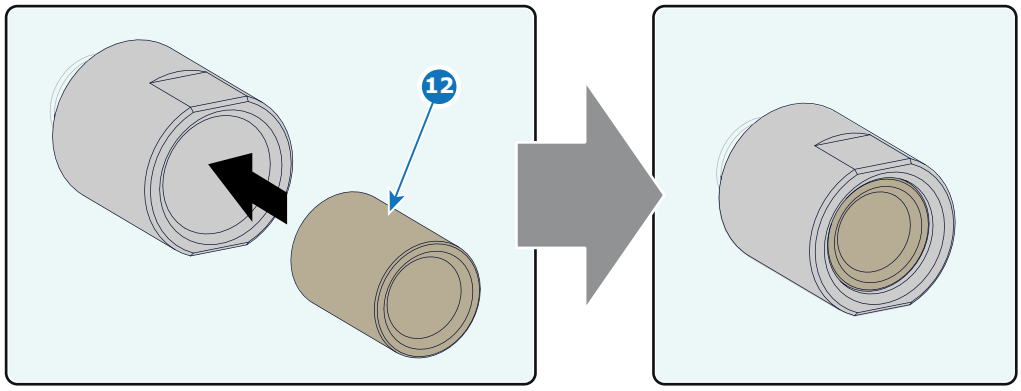


Image 6–35

7. Remove the protective packing from the xenon lamp and gently insert the xenon lamp into the Lamp House as illustrated. Lamp cathode first, Make sure that the wire of the lamp anode is upwards oriented. While inserting the lamp, rotate it slightly, **engaging the pins** (reference 11 Image 6–36) of the cathode adapter in the foreseen slots. This is to ensure the lamp cathode is completely inserted. Keep supporting the anode of the lamp with one hand once the xenon lamp is in position.

   *Caution:* Ensure that you wear protective clothing, a full face shield and protective gloves.

   *Tip:* Write down the serial number of the xenon lamp. You will need this while updating the lamp parameters after installation of the xenon lamp. The serial number of the xenon lamp is engraved in the neck of the xenon lamp.

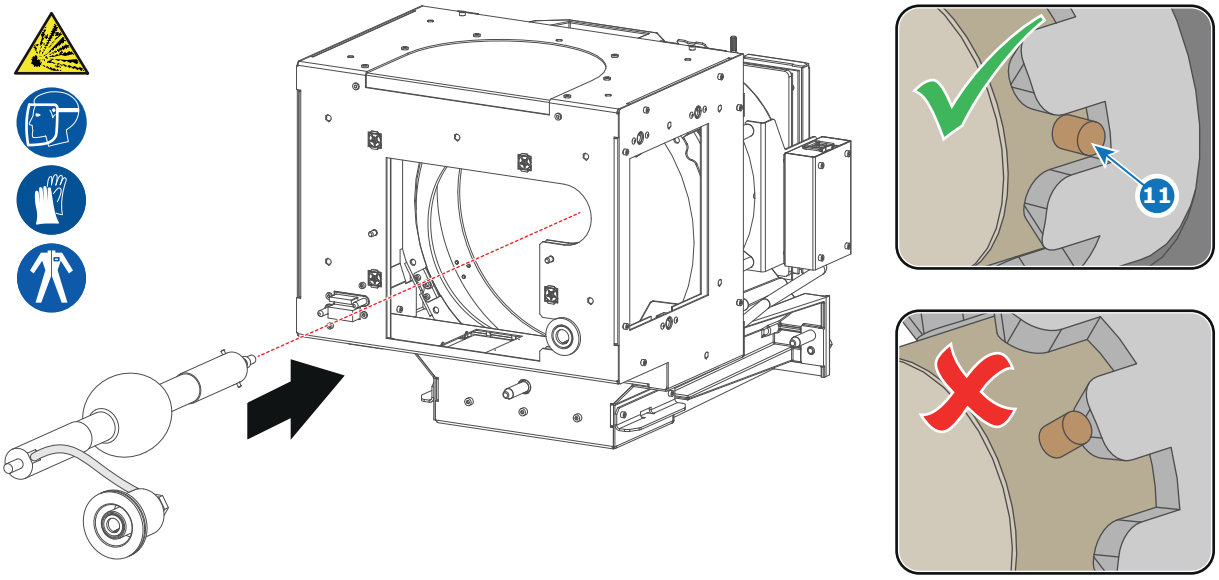


Image 6–36

8. Slide the anode connector in its position on the Lamp House as illustrated.

   *Caution:* Avoid any tension on the anode wire, ensuring there is no mechanical stress on the lamp.

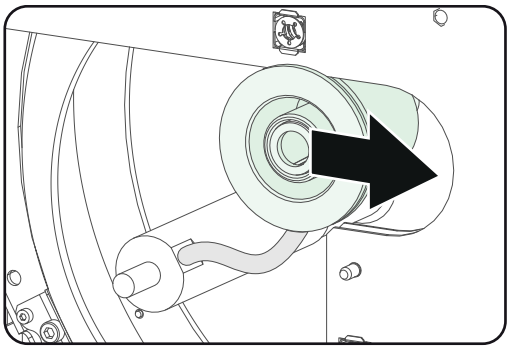

Image 6–37

**9.** Install the UV blocker assembly as illustrated. Use the opening at the side of the Lamp House to guide the anode pin of the xenon lamp into the anode supporting mechanism of the UV blocker.

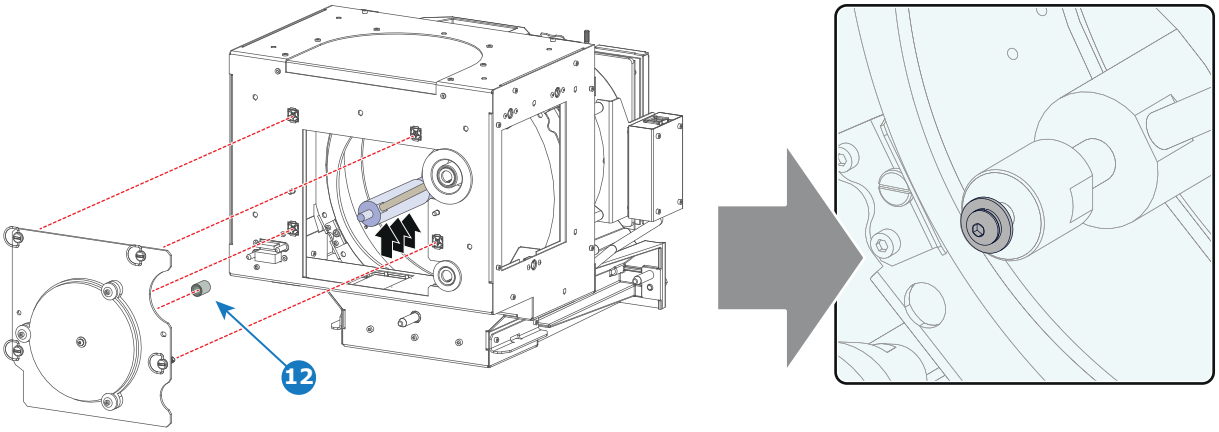


Image 6–38

**10.** Secure the UV blocker by fastening the four quarter turn screws (reference 5 Image 6–39) as illustrated.

*Note:* Ensure that the quarter turn screws turning wires are flush with the cover or interference will occur while inserting the Lamp House into the projector.

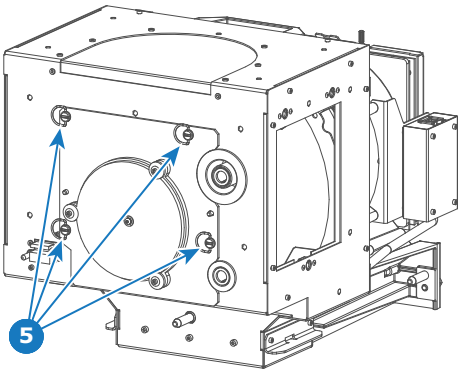


Image 6–39

**11.** Install the side cover of the Lamp House and fasten the three quarter turn screws (reference 4 Image 6–40) of the cover.

*Note:* Please ensure that the quarter turn screws turning wires are flush with the cover or interference will occur while inserting the Lamp House into the projector.

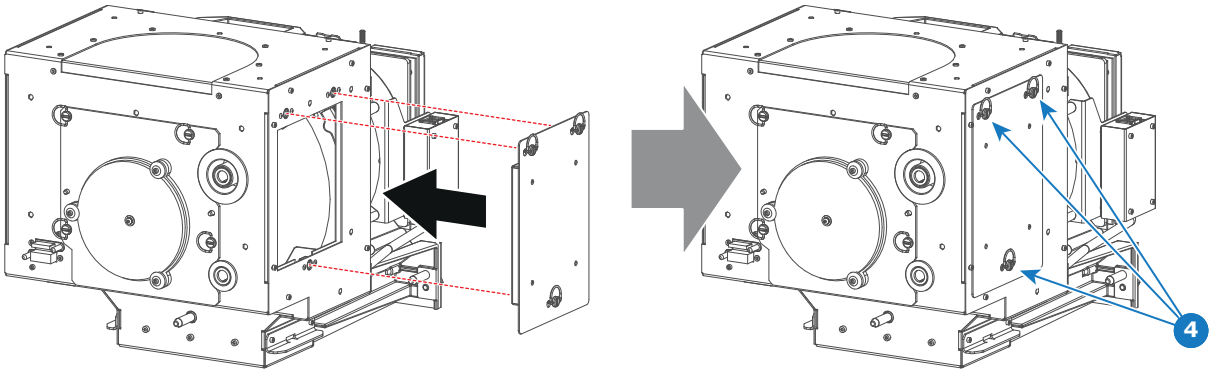


Image 6–40

**12.** Secure the xenon lamp cathode with the hexagon socket head cap screw (reference 1 Image 6–41), spring washer (reference 2 Image 6–41) and plain washer (reference 3 Image 6–41). Fasten the screw with a torque of **5 Nm** (3,7 lbf*ft). Use a torque wrench with a 5 mm Allen socket.

*Caution:* Make sure that both pins (reference 11 Image 6–41) of the cathode adapter remain engaged in the foreseen slots.

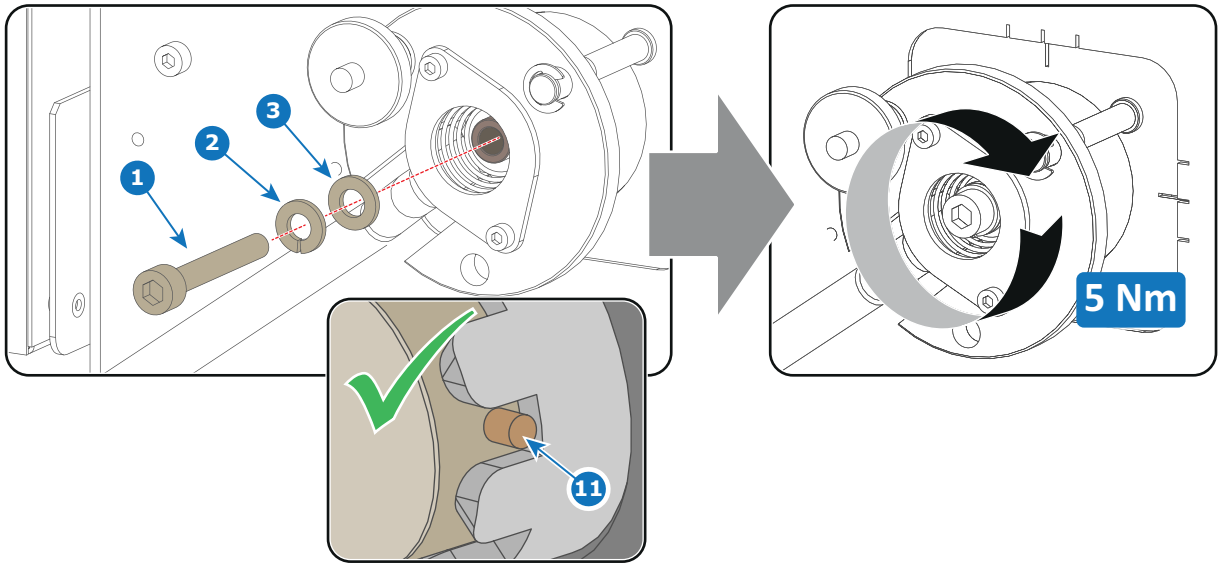


Image 6–41

**CAUTION:** The “LAMP INFO” parameters which are stored on a chip inside the Lamp House MUST be updated after each installation of an xenon lamp inside the Lamp House. Neglecting this update will result in poor performance and short life time of the xenon lamp.

A realignment of the xenon lamp in its reflector is required after the installation of the xenon lamp in the Lamp House.

# 6.8 Installation of the xenon lamp in manual S/M Lamp House

**WARNING:** DO NOT PERMIT UNAUTHORIZED PERSONNEL TO PERFORM OR ATTEMPT ANY PHASE OF XENON LAMP HANDLING OR SERVICE. ONLY TRAINED AND QUALIFIED TECHNICAL SERVICE PERSONNEL ARE ALLOWED TO HANDLE THE XENON LAMP.

**WARNING:** This procedure may only be performed by qualified technical service personnel.

**CAUTION:** Xenon compact arc lamps are highly pressurized. When ignited, the normal operating temperature of the bulb increases the pressure to a level at which the bulb may explode if not handled in strict accordance to the manufacturer's instructions. The bulb is stable at room temperature, but may still explode if dropped or otherwise mishandled. Whenever the lamp house, containing a xenon lamp, has to be dismantled or whenever the protective container or cloth has to be removed from the xenon lamp, authorized protective clothing MUST be worn!

**WARNING:** Always wear face protection (full face shield) when handling xenon lamps.

**WARNING:** Always wear protective clothing (welder's jacket) when handling xenon lamps.

**WARNING:** Always wear clean leather gloves with wrist protectors when handling xenon lamps.

This procedure assumes that the anode support assembly and the side cover are already removed from the Lamp House due to the removal of the xenon lamp.

## Required tools

- Torque wrench with a 2,5 mm Allen socket.
- Torque Allen key
- 1,5 mm Allen wrench.
- 22 mm open-end wrench.
- Torque wrench with a 22 mm hexagon socket.
- Torque wrench with a 5 mm Allen socket.

## How to install the xenon lamp in the manual S/M Lamp House?

1. Install the lamp cathode adapter on the cathode of the xenon lamp. Note that some xenon lamps have a cathode pin with screw threat (reference 10 Image 6–42). Screw the adaptor on the anode pin as far as possible. Make sure that there is full contact between the adapter flat surface and the lamp base. Fasten the set screw (reference 9 Image 6–42) of the cathode adapter with a torque of **2.5Nm** (1.84 lbf*ft). Use a torque wrench with a 5mm Allen socket.

   *Caution:* Ensure that the adaptor is clean. Periodically clean the adapter. Remove oxide from silver plated adaptor with standard household metal polish (E.g. Brasso).

   *Warning:* Install the cathode adapter prior to removing the protective container or protective cloth from the xenon lamp.

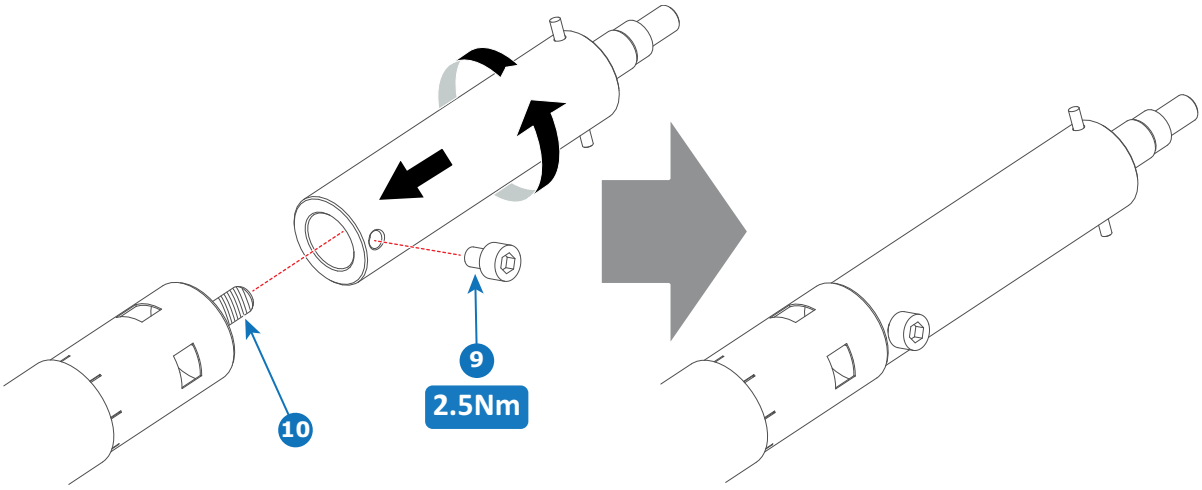


Image 6–42

2. Install the anode wire lug (reference 6 Image 6–43) upon the anode socket as illustrated. Use an 8mm Allen torque key set to **9Nm** (6.64lbf*ft) to secure the bolt (reference 8 Image 6–43). Place a flat washer (reference 7 Image 6–43) between the bolt and the wire lug.

*Warning:* Make sure that there is no tension on the anode wire of the xenon lamp.

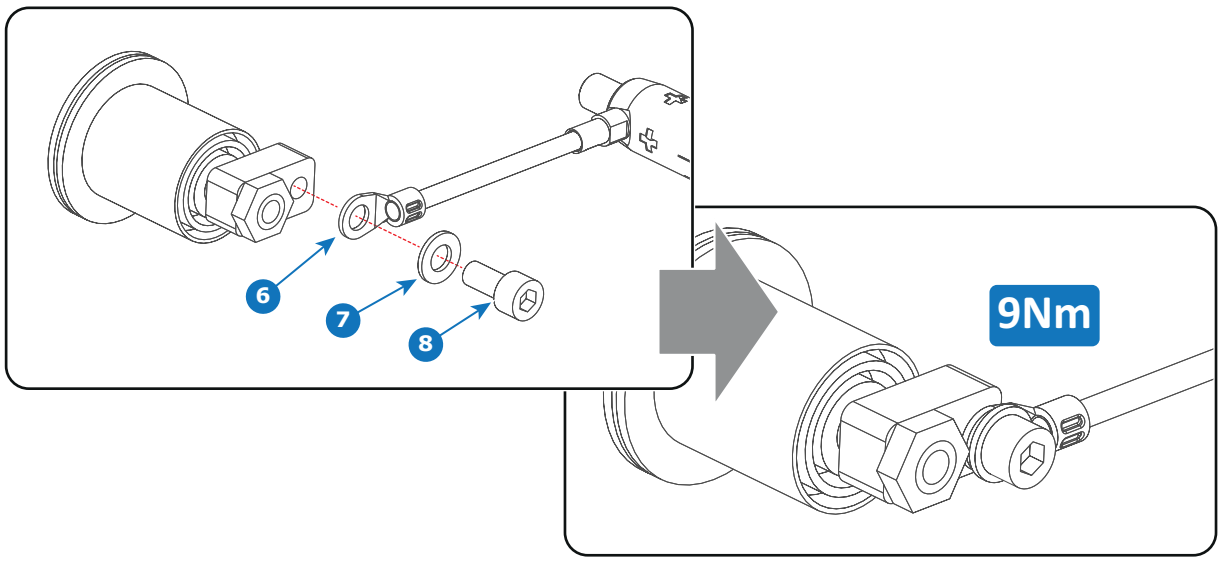


Image 6–43

*Tip:* Write down the serial number of the xenon lamp. You will need this while updating the lamp parameters after installation of the xenon lamp. The serial number of the xenon lamp is engraved in the neck of the xenon lamp.

3. Check the cathode connection inside the lamp house. Use an 22 mm open-end wrench to hold the first nut while fastening the second nut on the rod with a torque of **25Nm** (18.4 lbf*ft) using a torque wrench with 22 mm hexagon socket. Ensure that there is a flat washer at both sides of the wire lug. It's safer to do this check before the xenon lamp is installed to avoid accidental bumping against the xenon lamp.

*Tip:* The cathode socket can easily pulled out from the Lamp House as a whole to perform this check.

*Caution:* These cathode connections must be checked with every lamp change!

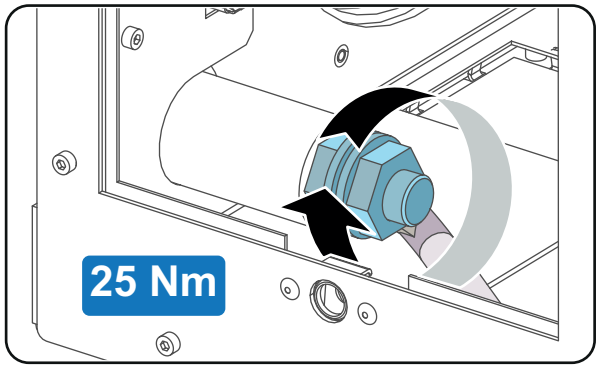


Image 6–44

4. Remove the protective packing from the xenon lamp and gently insert the xenon lamp into the Lamp House as illustrated. Lamp cathode first, Make sure that the wire of the lamp anode is upwards oriented. While inserting the lamp, rotate it slightly, **engaging the pins** (reference 11 Image 6–45) of the cathode adapter in the foreseen slots. This is to ensure the lamp cathode is completely inserted. Keep supporting the anode of the lamp with one hand once the xenon lamp is in position.

   *Caution:* Ensure that you wear protective clothing, a full face shield and protective gloves.

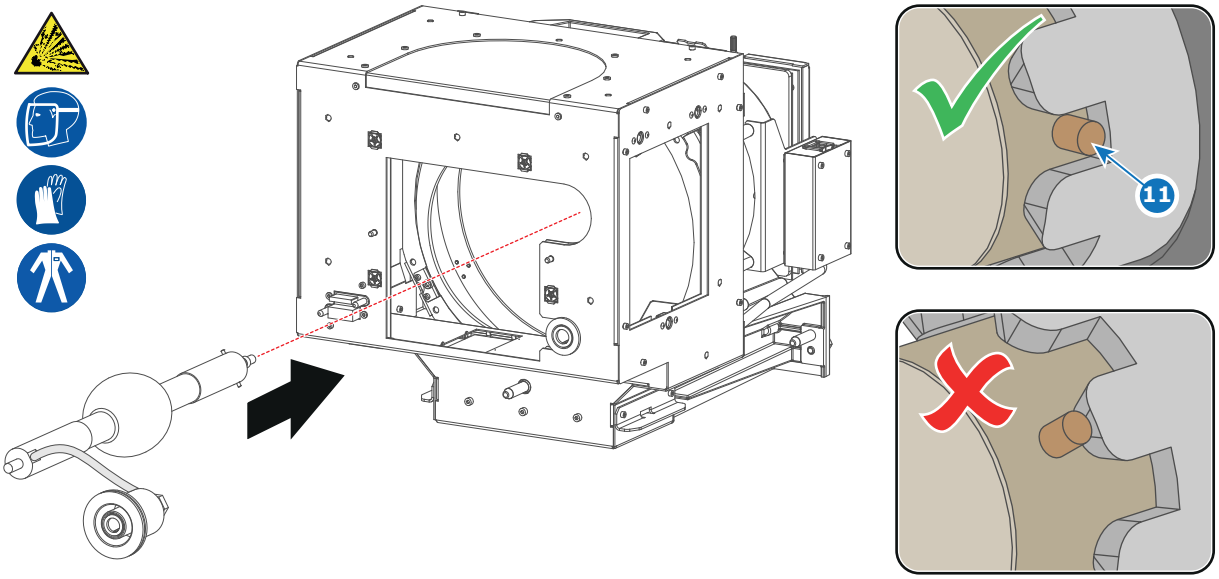


Image 6–45

5. Slide the anode connector in its position on the Lamp House as illustrated.

   *Caution:* Avoid any tension on the anode wire, ensuring there is no mechanical stress on the lamp.

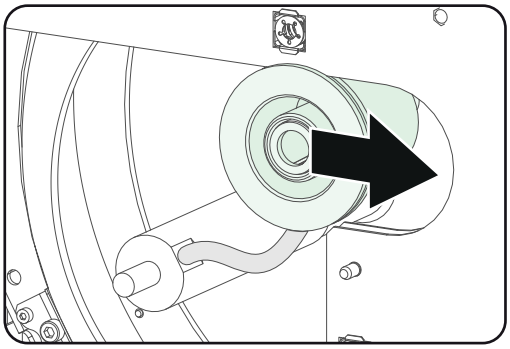

Image 6–46

6. Install the UV blocker assembly as illustrated. Use the opening at the side of the Lamp House to guide the anode pin of the xenon lamp into the anode supporting mechanism of the UV blocker.

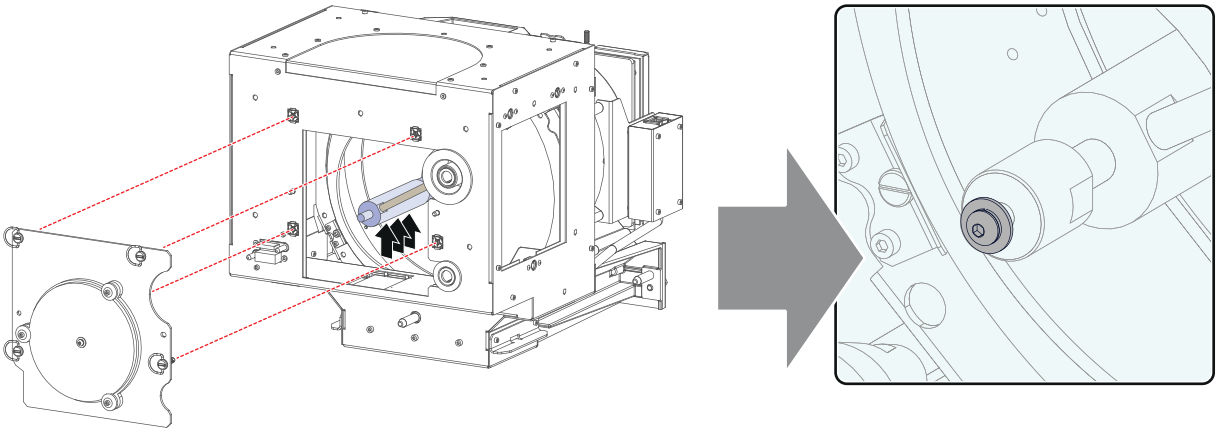

Image 6–47

7. Secure the UV blocker by fastening the four quarter turn screws (reference 5 Image 6–48) as illustrated.

   *Note:* Ensure that the quarter turn screws turning wires are flush with the cover or interference will occur while inserting the Lamp House into the projector.

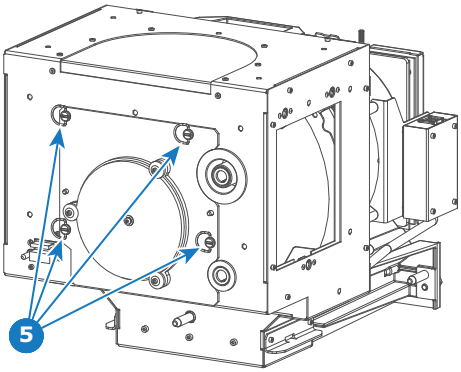


Image 6–48

8. Install the side cover of the Lamp House and fasten the three quarter turn screws (reference 4 Image 6–49) of the cover.

   *Note:* Please ensure that the quarter turn screws turning wires are flush with the cover or interference will occur while inserting the Lamp House into the projector.

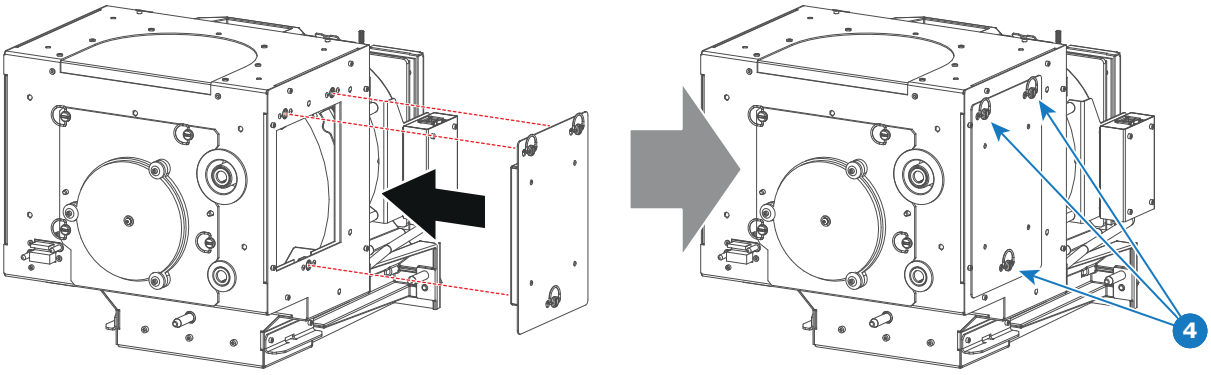


Image 6–49

9. Secure the xenon lamp cathode with the hexagon socket head cap screw (reference 1 Image 6–50), spring washer (reference 2 Image 6–50) and plain washer (reference 3 Image 6–50). Fasten the screw with a torque of **5 Nm** (3,7 lbf*ft). Use a torque wrench with a 5 mm Allen socket.

   *Caution:* Make sure that both pins (reference 11 Image 6–50) of the cathode adapter remain engaged in the foreseen slots.

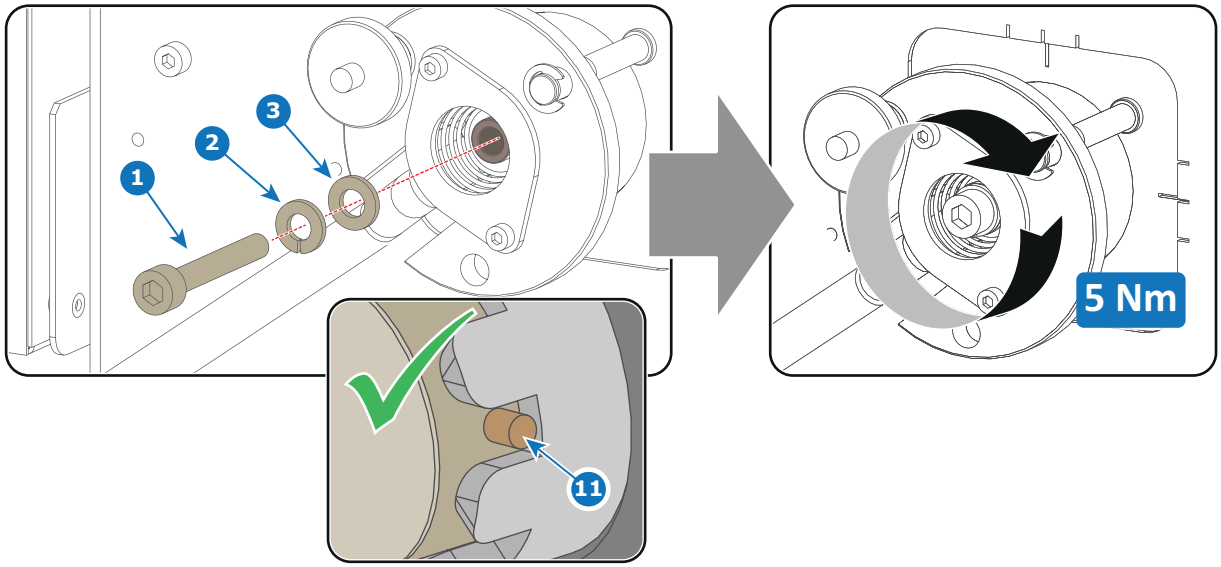


Image 6–50

**CAUTION:** The “LAMP INFO” parameters which are stored on a chip inside the Lamp House MUST be updated after each installation of an xenon lamp inside the Lamp House. Neglecting this update will result in poor performance and short life time of the xenon lamp.

A realignment of the xenon lamp in its reflector is required after the installation of the xenon lamp in the Lamp House.

# 6.9 Removal of the xenon lamp from motorized XL Lamp House

**WARNING:** DO NOT PERMIT UNAUTHORIZED PERSONNEL TO PERFORM OR ATTEMPT ANY PHASE OF XENON LAMP HANDLING OR SERVICE. ONLY TRAINED AND QUALIFIED TECHNICAL SERVICE PERSONNEL ARE ALLOWED TO HANDLE THE XENON LAMP.

**WARNING:** This procedure may only be performed by qualified technical service personnel.

**CAUTION:** Xenon compact arc lamps are highly pressurized. When ignited, the normal operating temperature of the bulb increases the pressure to a level at which the bulb may explode if not handled in strict accordance to the manufacturer's instructions. The bulb is stable at room temperature, but may still explode if dropped or otherwise mishandled. Whenever the lamp house, containing a xenon lamp, has to be dismantled or whenever the protective container or cloth has to be removed from the xenon lamp, authorized protective clothing MUST be worn!

**WARNING:** Always wear face protection (full face shield) when handling xenon lamps.

**WARNING:** Always wear protective clothing (welder's jacket) when handling xenon lamps.

**WARNING:** Always wear clean leather gloves with wrist protectors when handling xenon lamps.

## Required tools

- Two open-end wrenches of 22mm.
- Lamp protective container or protective cloth with two binders.
- Flat blade screw driver.
- 5mm Allen wrench.
- 2,5 mm Allen wrench.

## How to remove the xenon lamp out of the motorized XL Lamp House?

1. Remove the hexagon socket head cap screw (reference 1 Image 6–51) which fasten the cathode of the xenon lamp. Use a 5 mm Allen wrench. Do not release the cathode wire lug. The screw contains a spring washer and a plain washer (reference 2 & 3 Image 6–51).

   *Note:* The cathode wire remains in its position after the screw and two washers are removed.

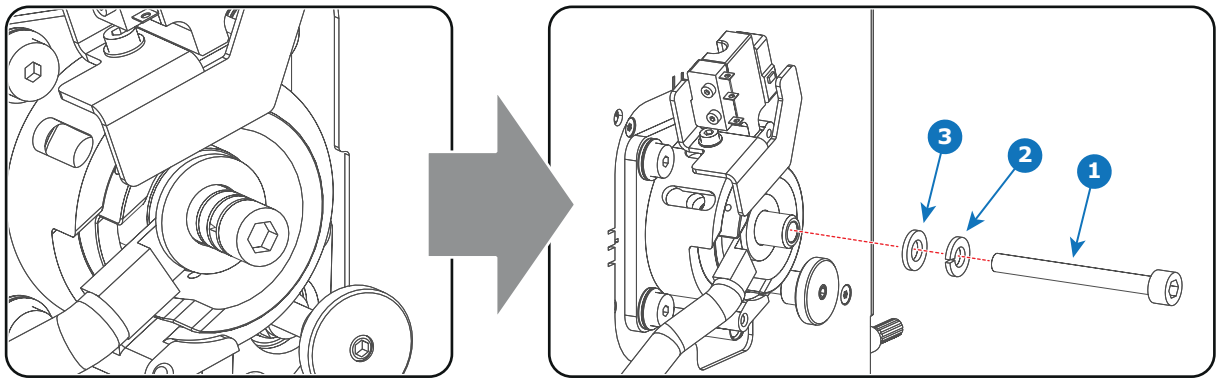


Image 6–51

2. Remove the side cover of the Lamp House by releasing the three quarter turn screws (reference 4 Image 6–52) of the side cover as illustrated.

   *Caution:* Ensure that you wear protective clothing, a full face shield and protective gloves.

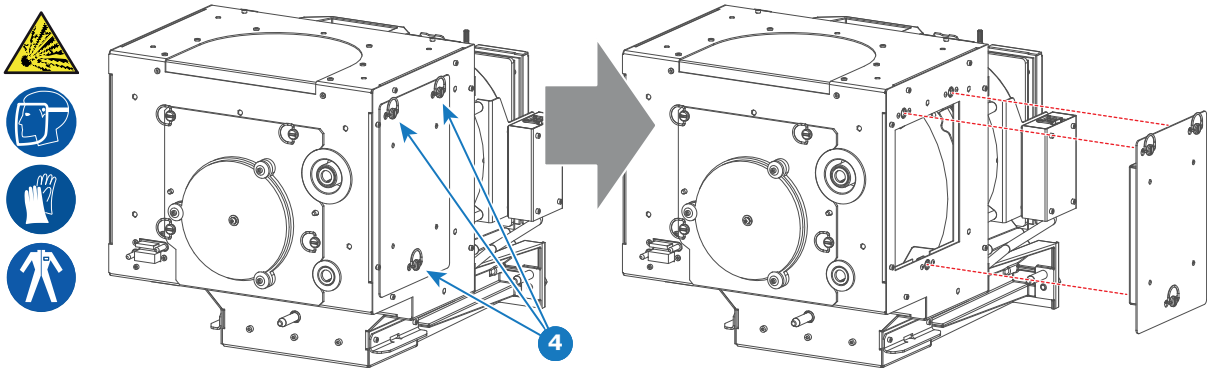


Image 6–52

3. Release the four quarter turn screws (reference 5 Image 6–53) of the UV blocker assembly as illustrated. Make sure that the anode support remains in its position while releasing the screws.

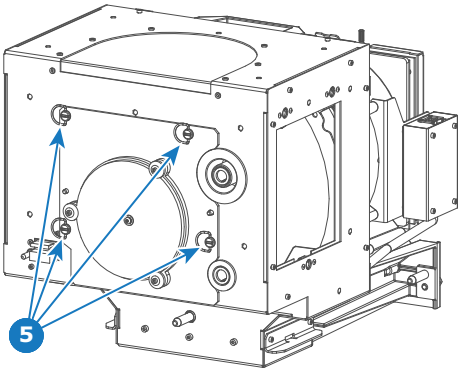


Image 6–53

4. Support the xenon lamp inside the Lamp House with one hand while removing the UV blocker assembly from the lamp house.

   *Warning:* Supporting the xenon lamp with one hand prevents the xenon lamp from dropping and colliding with the chassis of the Lamp House.

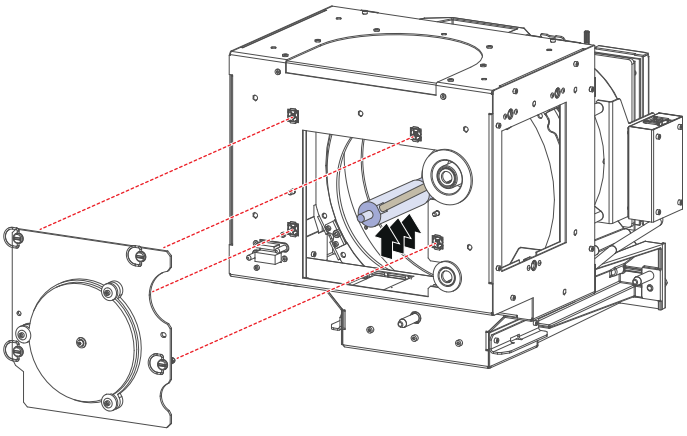

Image 6–54

5. Slide out the anode connector from the Lamp House. The anode connector remains attached with the lamp anode wire.

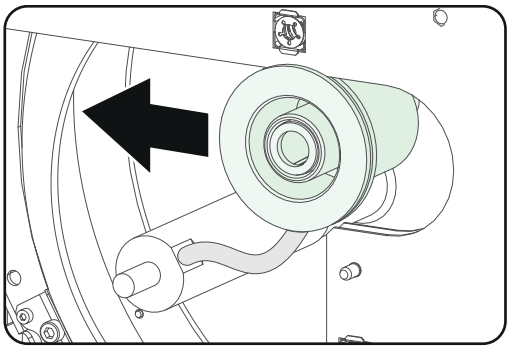

Image 6–55

6. Gently remove the xenon lamp together with the anode socket out of the Lamp House. Do not use excessive force upon the xenon lamp. Normally the xenon lamp will easily slide out the cathode socket of the Lamp House.

   *Warning:* Supporting the xenon lamp with one hand while pulling it out with other hand prevents it from bumping against the chassis of the Lamp House.

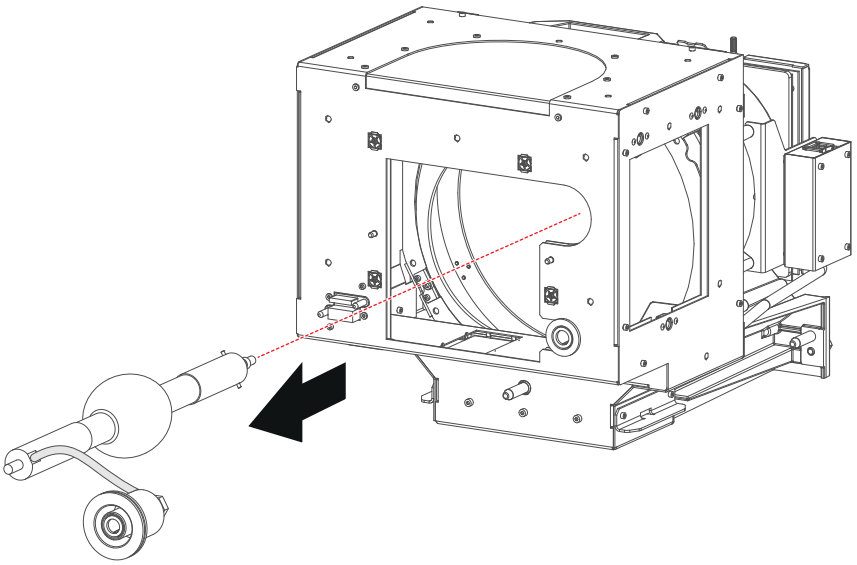

Image 6–56

7. Place the xenon lamp in its protective container or wrap the xenon lamp in a protective cloth and secure with two binders.

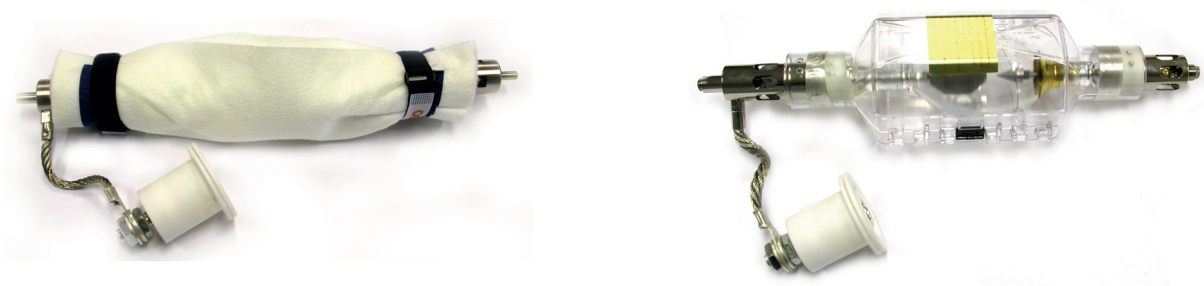

Image 6–57 Left: Xenon lamp wrapped in a protective cloth. Right: Xenon lamp captured in a protective container.

8. Remove the anode wire lug (reference 7 Image 6–58) from the anode socket. Use for that two open ended spanners of 22 mm. Hold the first nut (reference 5) with one spanner while releasing the second nut (reference 9 Image 6–58) with the other spanner.

   *Tip:* Place the flat washer and the nut back on the rod after the lug is removed.

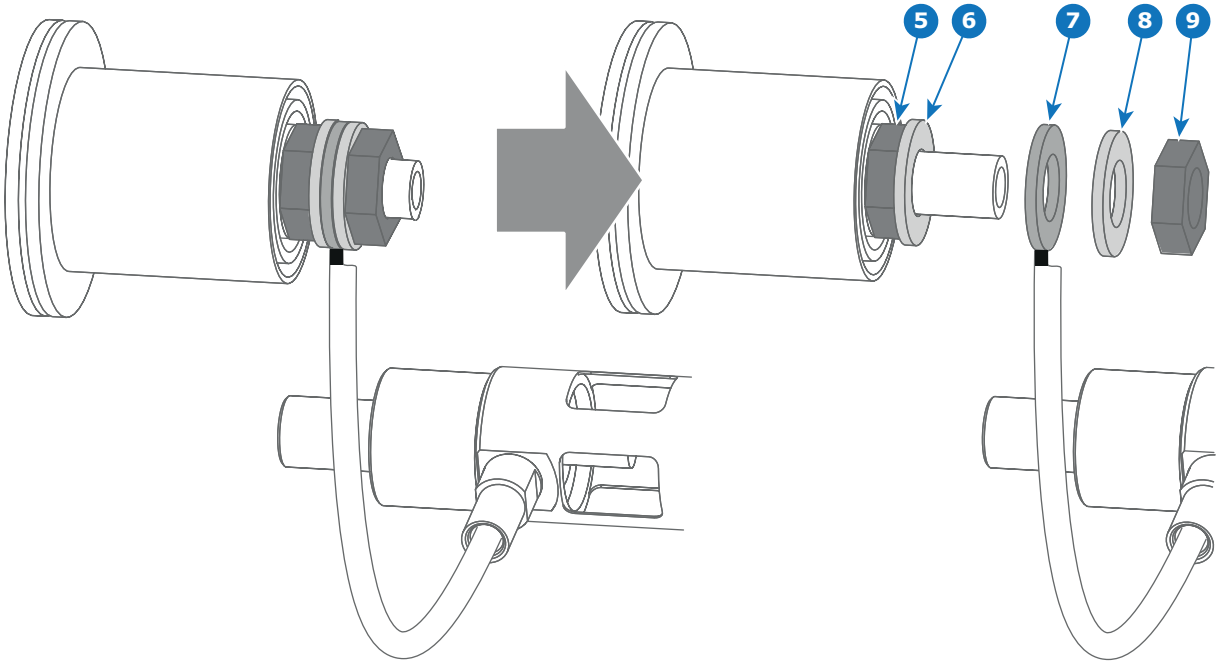


Image 6–58

**9.** Remove the cathode adapter from the xenon lamp by releasing the hexagon socket head set screw (reference 9 Image 6–59) of the adapter as illustrated. Use a 2.5mm Allen wrench.

*Note:* Some xenon lamps have a cathode pin with screw threat (reference 10 Image 6–59.

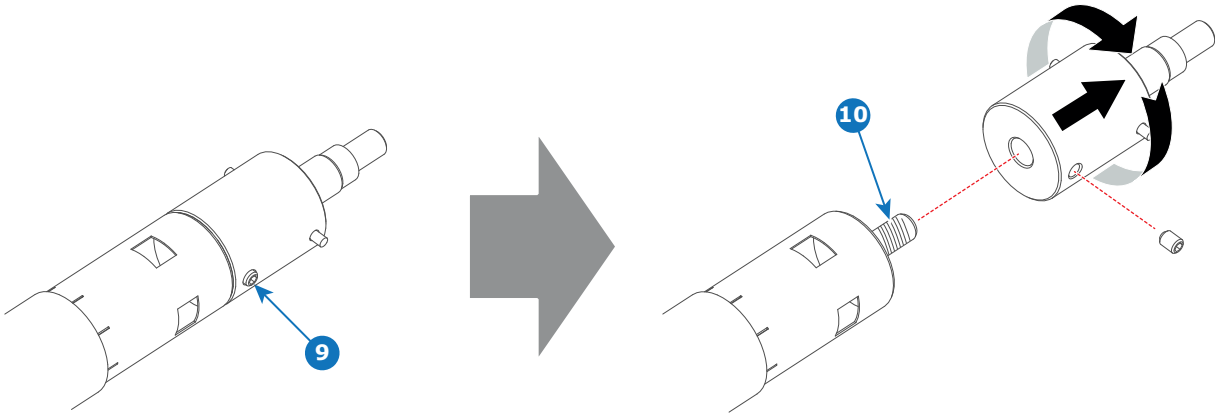


Image 6–59

**10.** Remove the anode adapter from the xenon lamp by releasing the hexagon socket head set screw (reference 13 Image 6–60) of the lamp adapter as illustrated. Use for that a 2.5mm Allen wrench.

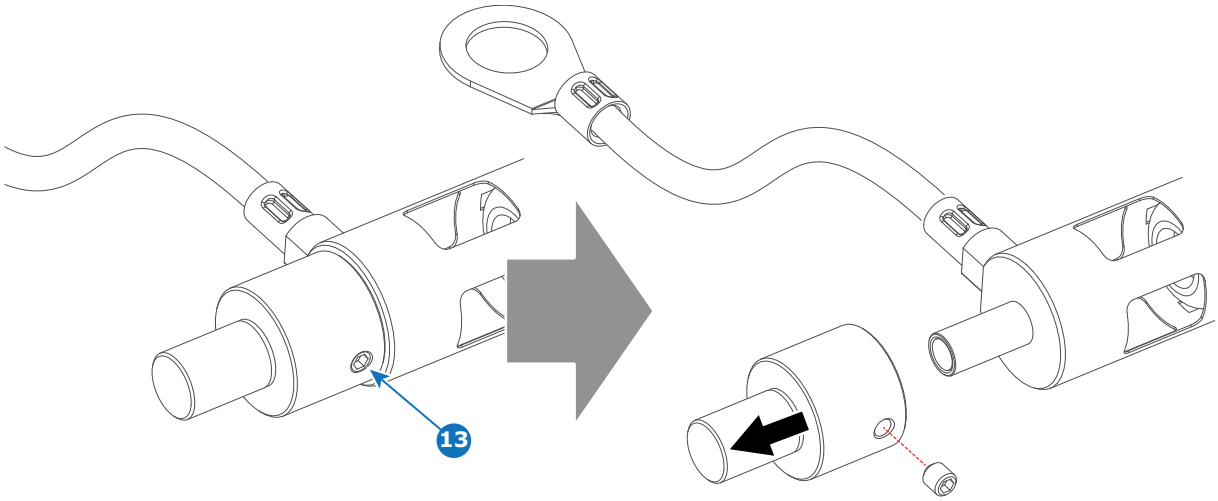


Image 6–60

**CAUTION: Expired xenon lamps**.
Dispose of expired bulbs that are beyond warranty according the national regulations. See also related user manual of the lamp supplier for more guidance.

Reinstall the UV blocker assembly and the side cover in case you do not intend to install another xenon lamp immediately in the Lamp House.

# 6.10 Removal of the xenon lamp from motorized S/M Lamp House

**WARNING:** DO NOT PERMIT UNAUTHORIZED PERSONNEL TO PERFORM OR ATTEMPT ANY PHASE OF XENON LAMP HANDLING OR SERVICE. ONLY TRAINED AND QUALIFIED TECHNICAL SERVICE PERSONNEL ARE ALLOWED TO HANDLE THE XENON LAMP.

**WARNING:** This procedure may only be performed by qualified technical service personnel.

**CAUTION:** Xenon compact arc lamps are highly pressurized. When ignited, the normal operating temperature of the bulb increases the pressure to a level at which the bulb may explode if not handled in strict accordance to the manufacturer's instructions. The bulb is stable at room temperature, but may still explode if dropped or otherwise mishandled. Whenever the lamp house, containing a xenon lamp, has to be dismantled or whenever the protective container or cloth has to be removed from the xenon lamp, authorized protective clothing MUST be worn!

**WARNING:** Always wear face protection (full face shield) when handling xenon lamps.

**WARNING:** Always wear protective clothing (welder's jacket) when handling xenon lamps.

**WARNING:** Always wear clean leather gloves with wrist protectors when handling xenon lamps.

## Required tools

- 5mm Allen wrench.
- 8mm Allen wrench.
- Lamp protective container or protective cloth with two binders.
- Flat blade screw driver.

## How to remove the xenon lamp out of the motorized S/M Lamp House?

1. Remove the hexagon socket head cap screw (reference 1 Image 6–61) which fasten the cathode of the xenon lamp. Use a 5mm Allen wrench. Do not release the cathode wire lug. The screw contains a spring washer and a plain washer (reference 2 & 3 Image 6–61).

   *Note:* The cathode wire remains in its position after the screw and two washers are removed.

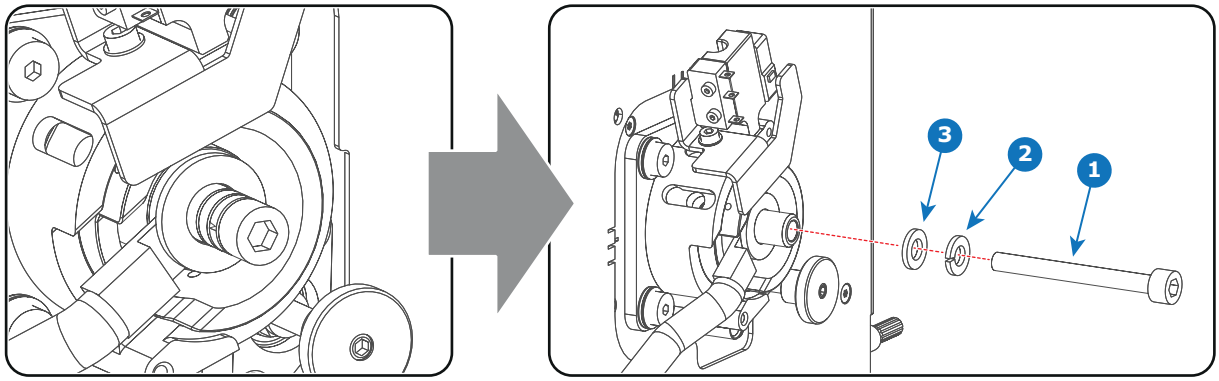


Image 6–61

2. Remove the side cover of the Lamp House by releasing the three quarter turn screws (reference 4 Image 6–62) of the side cover as illustrated.

*Caution:* Ensure that you wear protective clothing, a full face shield and protective gloves.

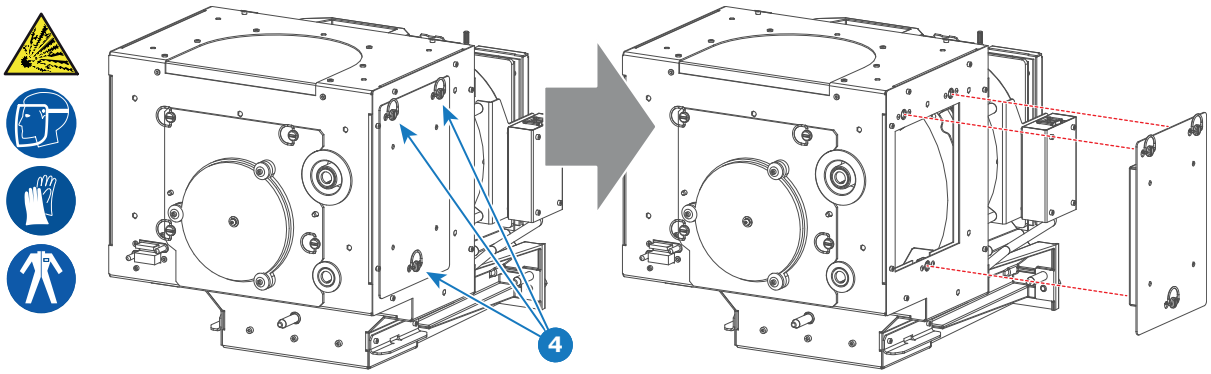


Image 6–62

3. Release the four quarter turn screws (reference 5 Image 6–63) of the UV blocker assembly as illustrated. Make sure that the anode support remains in its position while releasing the screws.

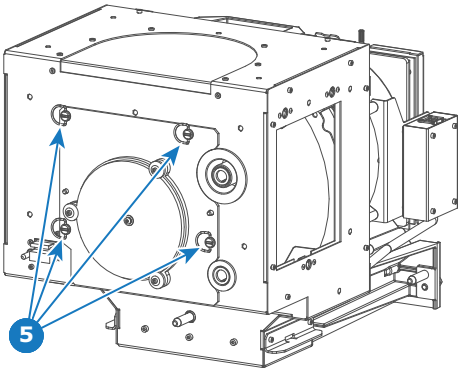


Image 6–63

4. Support the xenon lamp inside the Lamp House with one hand while removing the UV blocker assembly from the lamp house.

*Warning:* Supporting the xenon lamp with one hand prevents the xenon lamp from dropping and colliding with the chassis of the Lamp House.

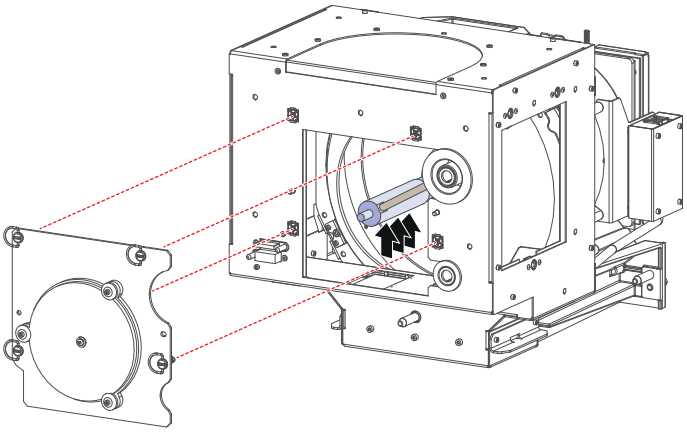

Image 6–64

5. Slide out the anode connector from the Lamp House. The anode connector remains attached with the lamp anode wire.

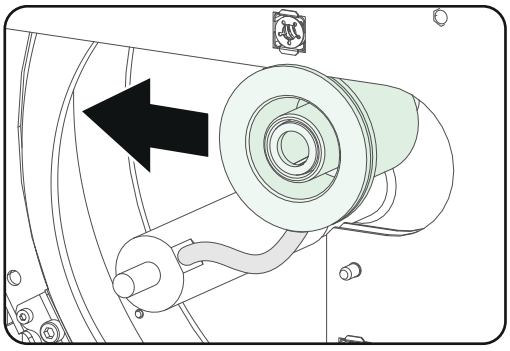

Image 6–65

6. Gently remove the xenon lamp together with the anode socket out of the Lamp House. Do not use excessive force upon the xenon lamp. Normally the xenon lamp will easily slide out the cathode socket of the Lamp House.

   *Warning:* Supporting the xenon lamp with one hand while pulling it out with other hand prevents it from bumping against the chassis of the Lamp House.

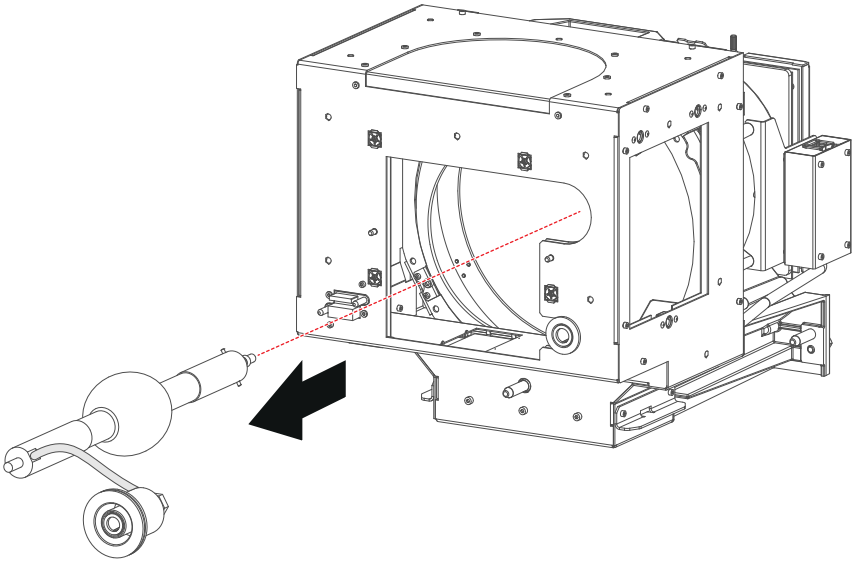

Image 6–66

7. Place the xenon lamp in its protective container or wrap the xenon lamp in a protective cloth and secure with two binders.

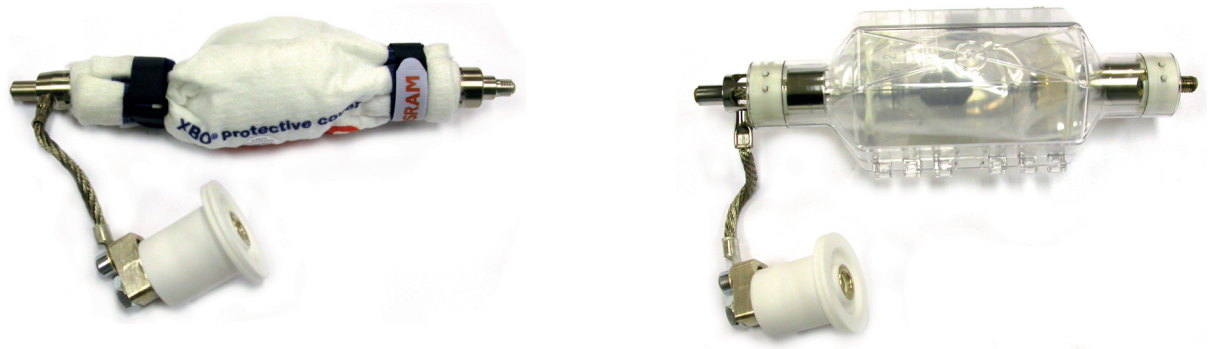

Image 6–67 Left: Xenon lamp wrapped in a protective cloth. Right: Xenon lamp captured in a protective container.

8. Remove the anode wire lug (reference 6 Image 6–68) from the anode socket as illustrated. Use a 8mm Allen wrench.

   *Tip:* Place the flat washer and bolt (reference 7 & 8 Image 6–68) back on its place after the lug is removed.

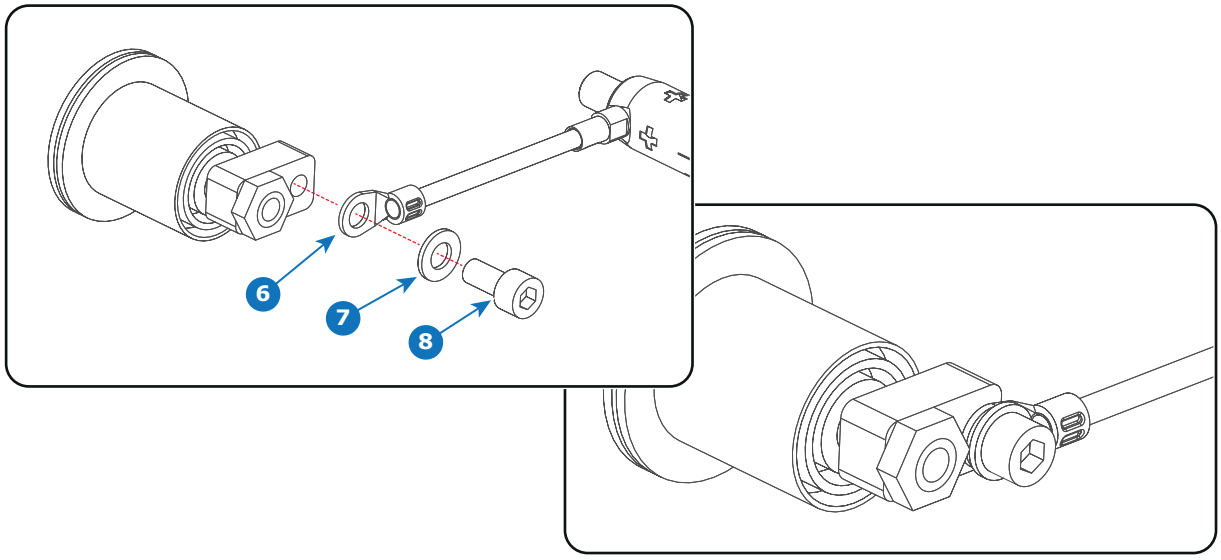


Image 6–68

9. Remove the cathode adapter from the xenon lamp by releasing the hexagon socket head cap screw (reference 9 Image 6–69) of the adapter as illustrated. Use a 5mm Allen wrench.

*Note:* Some xenon lamps have a cathode pin with screw threat (reference 10 Image 6–69).

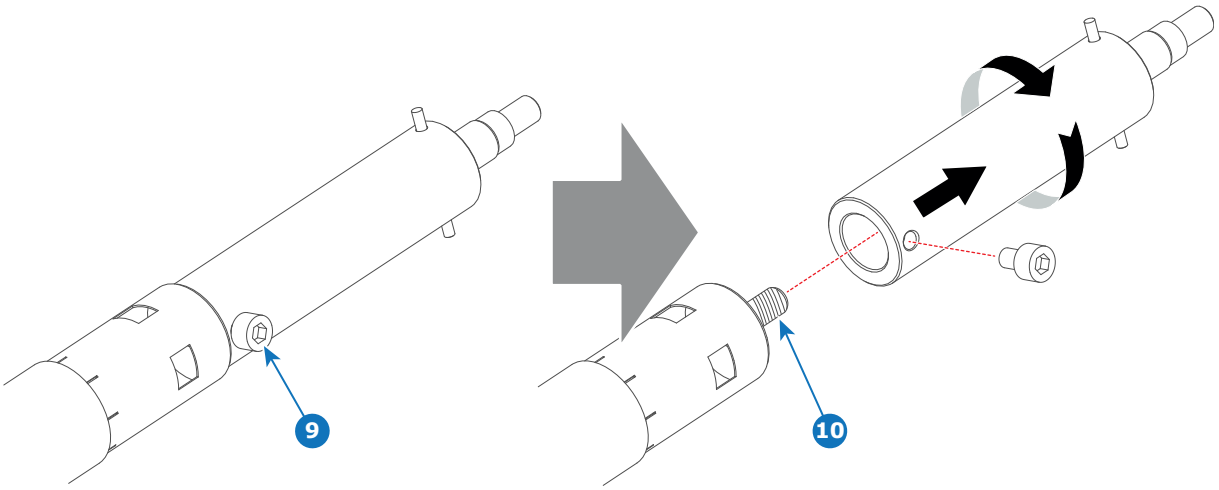


Image 6–69

**CAUTION: Expired xenon lamps**.
Dispose of expired bulbs that are beyond warranty according the national regulations. See also related user manual of the lamp supplier for more guidance.

Reinstall the UV blocker assembly and the side cover in case you do not intend to install another xenon lamp immediately in the Lamp House.

# 6.11 Installation of the xenon lamp in motorized XL Lamp House

**WARNING:** DO NOT PERMIT UNAUTHORIZED PERSONNEL TO PERFORM OR ATTEMPT ANY PHASE OF XENON LAMP HANDLING OR SERVICE. ONLY TRAINED AND QUALIFIED TECHNICAL SERVICE PERSONNEL ARE ALLOWED TO HANDLE THE XENON LAMP.

**WARNING:** This procedure may only be performed by qualified technical service personnel.

**CAUTION:** Xenon compact arc lamps are highly pressurized. When ignited, the normal operating temperature of the bulb increases the pressure to a level at which the bulb may explode if not handled in strict accordance to the manufacturer's instructions. The bulb is stable at room temperature, but may still explode if dropped or otherwise mishandled. Whenever the lamp house, containing a xenon lamp, has to be dismantled or whenever the protective container or cloth has to be removed from the xenon lamp, authorized protective clothing MUST be worn!

**WARNING:** Always wear face protection (full face shield) when handling xenon lamps.

**WARNING:** Always wear protective clothing (welder's jacket) when handling xenon lamps.

**WARNING:** Always wear clean leather gloves with wrist protectors when handling xenon lamps.

This procedure assumes that the anode support assembly and the side cover are already removed from the Lamp House due to the removal of the xenon lamp.

## Required tools

- Torque wrench with a 2,5 mm Allen socket.
- Torque Allen key
- 22 mm open-end wrench.
- Torque wrench with a 22 mm hexagon socket.
- Torque wrench with a 5 mm Allen socket.

## How to install the xenon lamp in the motorized XL Lamp House?

1. Install the appropriate lamp cathode adapter on the cathode of the xenon lamp. Note that some xenon lamps have a cathode pin with screw threat (reference 10 Image 6–70). Screw the adaptor on the anode pin as far as possible. Make sure that there is full contact between the adapter flat surface and the lamp base. Fasten the set screw (reference 9 Image 6–70) of the cathode adapter with a torque of **2.5Nm** (1.84 lbf*ft). Use a torque wrench with a 2.5mm Allen socket.

   *Tip:* See supported xenon bulb lamps to know which cathode adapter your lamp requires.

   *Caution:* Ensure that the adaptor is clean. Periodically clean the adapter. Remove oxide from silver plated adaptor with standard household metal polish (E.g. Brasso).

   *Warning:* Install the cathode adapter prior to removing the protective container or protective cloth from the xenon lamp.

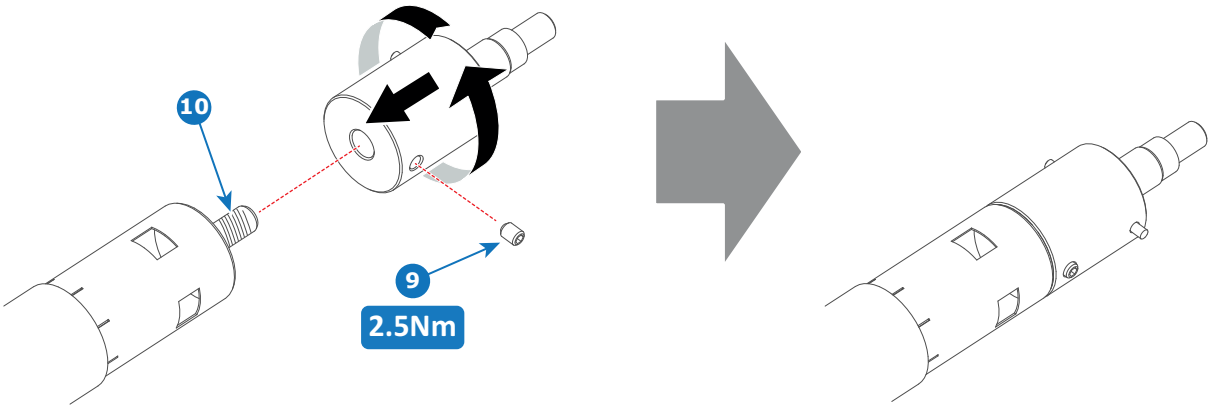


Image 6–70

2. Requires the xenon lamp an anode adapter?

   *Tip:* See supported xenon bulb lamps to know if your lamp requires an anode adapter.

   If yes, install the appropriate lamp anode adapter on the anode of the xenon lamp. Fasten the set screw (reference 13 Image 6–71) of the anode adapter with a torque of **2.5Nm** (1.84 lbf*ft). Use a torque wrench with a 2.5mm Allen socket. Make sure that there is full contact between the adapter flat surface and the lamp base.

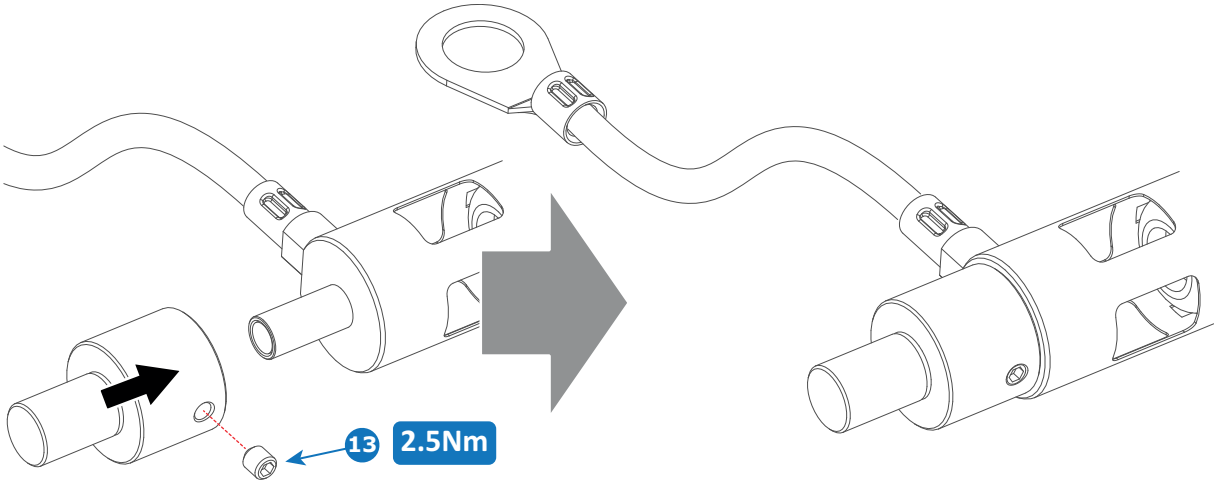


Image 6–71

   If no, make sure that there is no anode adapter installed on the anode of the xenon lamp.

3. Install the anode wire lug (reference 7 Image 6–72) on the anode socket of the Lamp House as illustrated. Use an open-end wrench of 22 mm to hold the first nut (reference 5 Image 6–72) while fastening the second nut (reference 9 Image 6–72) with a torque of **25Nm** (18.4 lbf*ft) using a torque wrench. Ensure that there is a flat washer (reference 6 & 8 Image 6–72) at both sides of the wire lug (reference 7 Image 6–72).

   *Warning:* A torque of **25Nm** (18.4 lbf*ft) must be applied to fasten the nuts. Make sure that there is no tension on the anode wire of the xenon lamp.

   *Note:* Alter tightening the two nuts, the connector should still be “floating”.

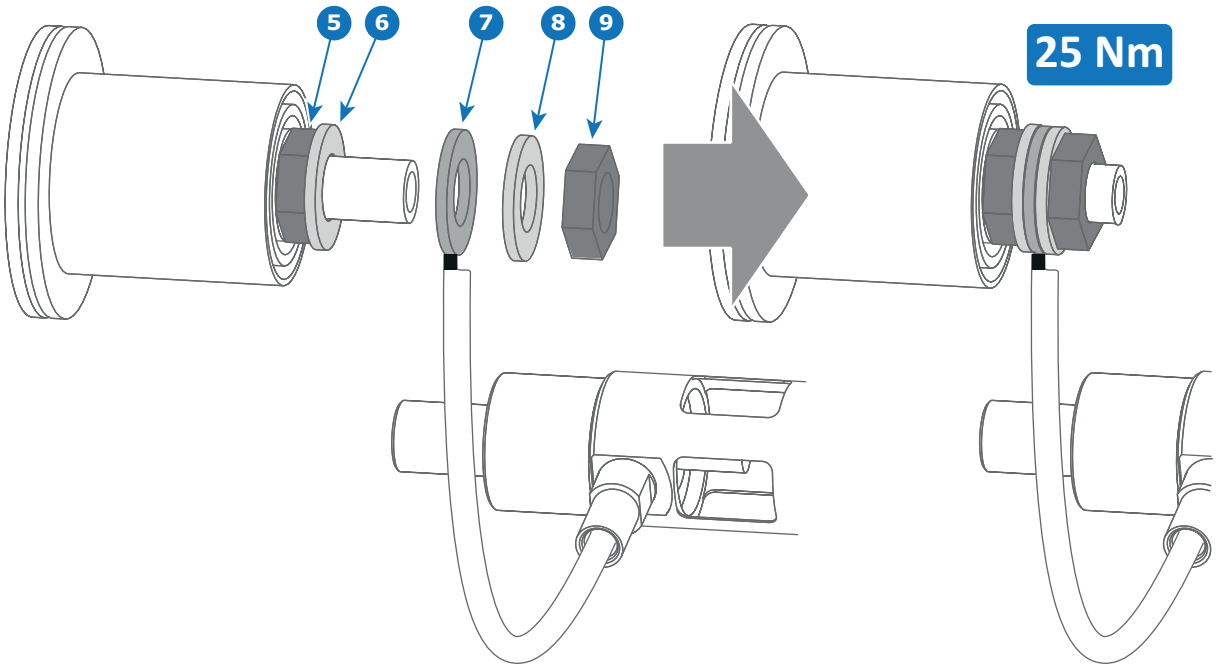


Image 6–72

*Tip:* Write down the serial number of the xenon lamp. You will need this while updating the lamp parameters after installation of the xenon lamp. The serial number of the xenon lamp is engraved in the neck of the xenon lamp.

4. Check the cathode connection inside the lamp house. Use an 22 mm open-end wrench to hold the first nut while fastening the second nut on the rod with a torque of **25Nm** (18.4 lbf*ft) using a torque wrench with 22 mm hexagon socket. Ensure that there is a flat washer at both sides of the wire lug. It's safer to do this check before the xenon lamp is installed to avoid accidental bumping against the xenon lamp.

   *Tip:* The cathode socket can easily pulled out from the Lamp House as a whole to perform this check.

   *Caution:* These cathode connections must be checked with every lamp change!

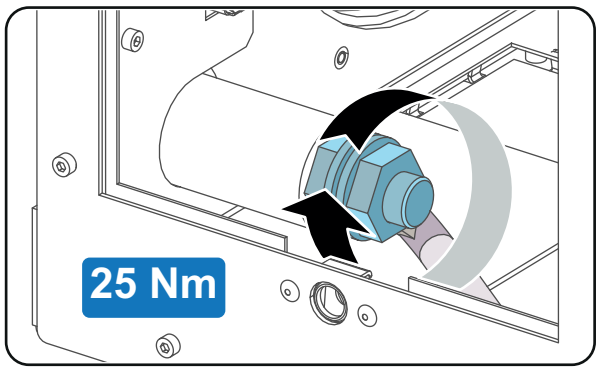


Image 6–73

5. Check the cathode connection inside the lamp house. Use an 22 mm open-end wrench to hold the first nut while fastening the second nut on the rod with a torque of **25Nm** (18.4 lbf*ft) using a torque wrench with 22 mm hexagon socket. Ensure that there is a flat washer at both sides of the wire lug.

   *Caution:* These cathode connections must be checked with every lamp change!

6. Requires the lamp an anode adaptation bushing inside the anode support?

   *Tip:* See supported xenon bulb lamps to know if your lamp requires an anode adaptation bushing.

If yes, insert the anode adaptation bushing (reference 12 Image 6–74 and Image 6–77) into the integrated anode support of the UV blocker.

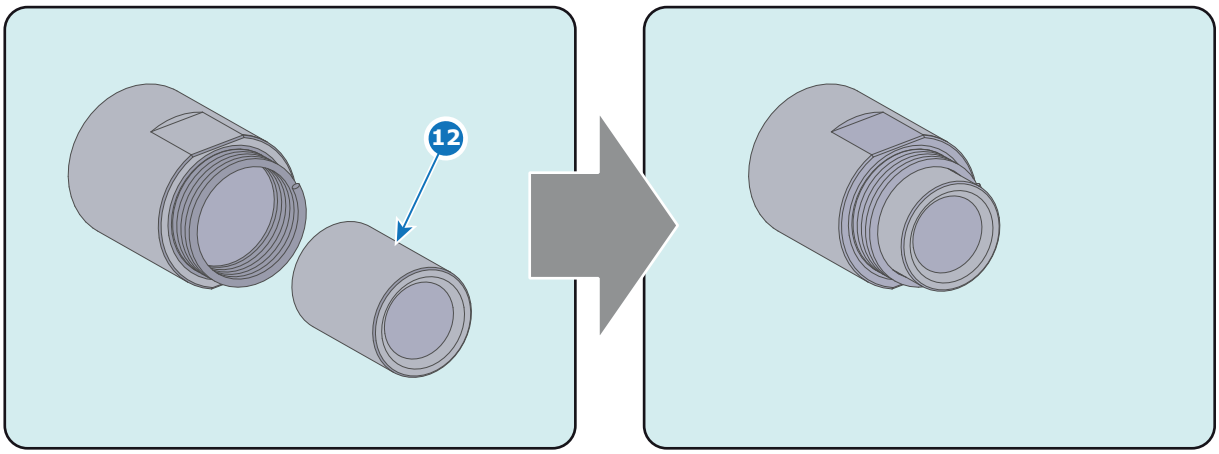


Image 6–74

If no, make sure that there is no anode adaptation bushing inserted into the anode support.

7. Remove the protective packing from the xenon lamp and gently insert the xenon lamp into the Lamp House as illustrated. Lamp cathode first, Make sure that the wire of the lamp anode is upwards oriented. While inserting the lamp, rotate it slightly, **engaging the pins** (reference 11 Image 6–75) of the cathode adapter in the foreseen slots. This is to ensure the lamp cathode is completely inserted. Keep supporting the anode of the lamp with one hand once the xenon lamp is in position.

   *Caution:* Ensure that you wear protective clothing, a full face shield and protective gloves.

   *Tip:* Write down the serial number of the xenon lamp. You will need this while updating the lamp parameters after installation of the xenon lamp. The serial number of the xenon lamp is engraved in the neck of the xenon lamp.

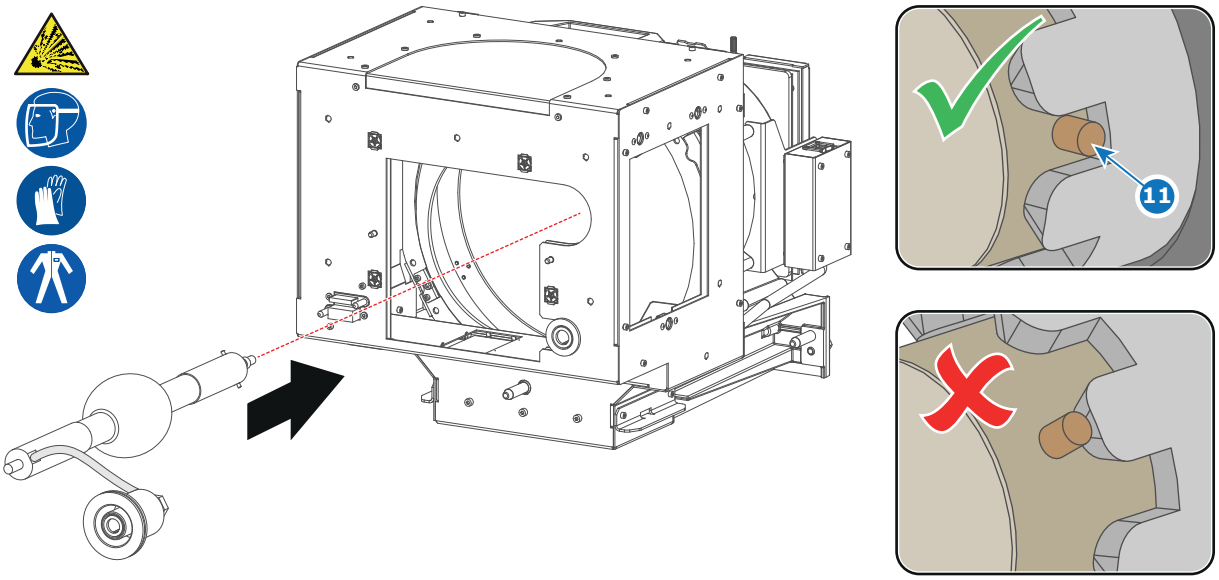


Image 6–75

8. Slide the anode connector in its position on the Lamp House as illustrated.

   *Caution:* Avoid any tension on the anode wire, ensuring there is no mechanical stress on the lamp.

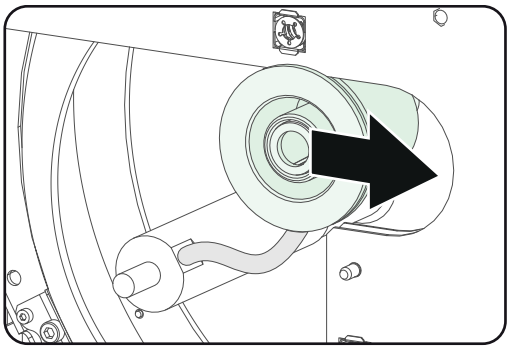

Image 6–76

**9.** Install the UV blocker assembly as illustrated. Use the opening at the side of the Lamp House to guide the anode pin of the xenon lamp into the anode supporting mechanism of the UV blocker.

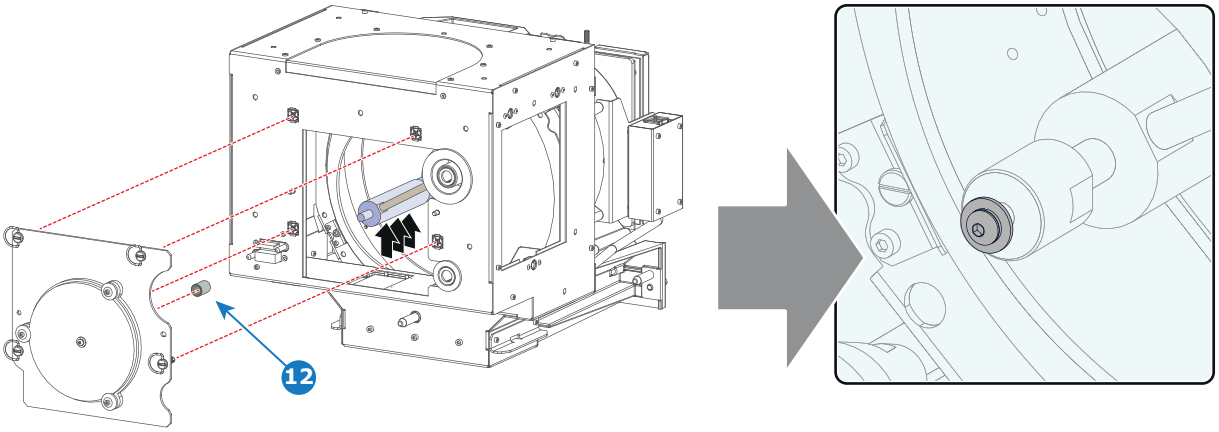


Image 6–77

**10.** Secure the UV blocker by fastening the four quarter turn screws (reference 5 Image 6–78) as illustrated.

*Note:* Ensure that the quarter turn screws turning wires are flush with the cover or interference will occur while inserting the Lamp House into the projector.

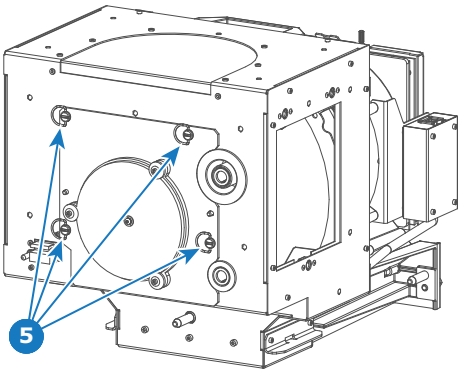


Image 6–78

**11.** Install the side cover of the Lamp House and fasten the three quarter turn screws (reference 4 Image 6–79) of the cover.

*Note:* Please ensure that the quarter turn screws turning wires are flush with the cover or interference will occur while inserting the Lamp House into the projector.

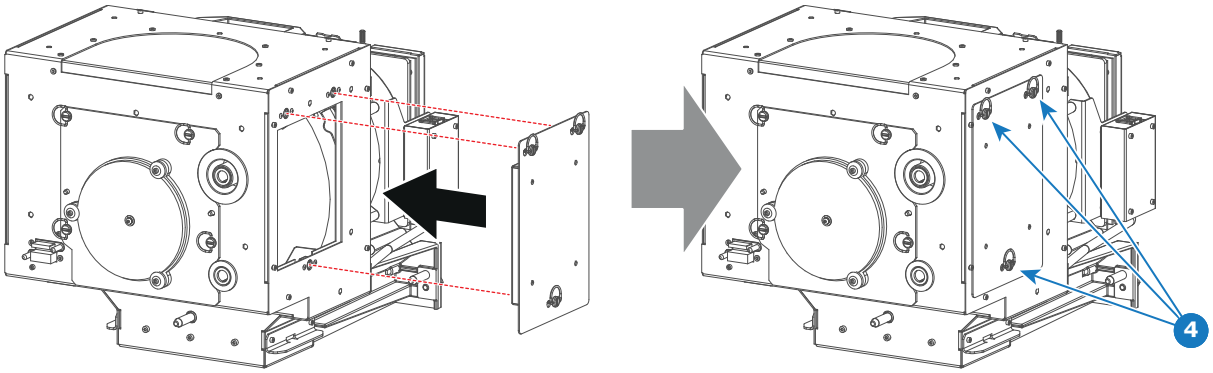


Image 6–79

**12.** Secure the xenon lamp cathode with the hexagon socket head cap screw (reference 1 Image 6–80), spring washer (reference 2 Image 6–80) and plain washer (reference 3 Image 6–80). Fasten the screw with a torque of **5 Nm** (3,7 lbf*ft). Use a torque wrench with a 5 mm Allen socket.

*Caution:* The hexagon socket head cap screw must have a length of 55mm (not longer and not shorter).

*Caution:* Make sure that both pins (reference 11Image 6–75 ) of the cathode adapter remain engaged in the foreseen slots.

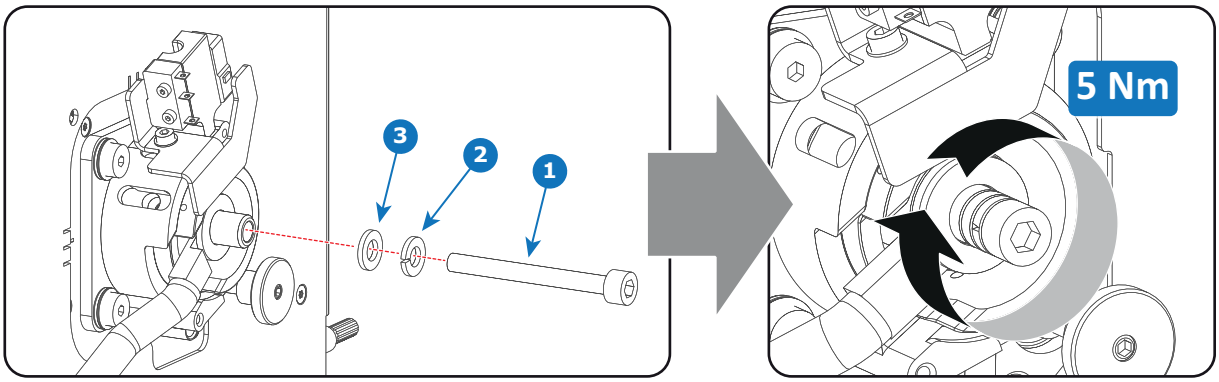


Image 6–80

**CAUTION:** The “LAMP INFO” parameters which are stored on a chip inside the Lamp House MUST be updated after each installation of an xenon lamp inside the Lamp House. Neglecting this update will result in poor performance and short life time of the xenon lamp.

A realignment of the xenon lamp in its reflector is required after the installation of the xenon lamp in the Lamp House.

# 6.12 Installation of the xenon lamp in motorized S/M Lamp House

**WARNING:** DO NOT PERMIT UNAUTHORIZED PERSONNEL TO PERFORM OR ATTEMPT ANY PHASE OF XENON LAMP HANDLING OR SERVICE. ONLY TRAINED AND QUALIFIED TECHNICAL SERVICE PERSONNEL ARE ALLOWED TO HANDLE THE XENON LAMP.

**WARNING:** This procedure may only be performed by qualified technical service personnel.

**CAUTION:** Xenon compact arc lamps are highly pressurized. When ignited, the normal operating temperature of the bulb increases the pressure to a level at which the bulb may explode if not handled in strict accordance to the manufacturer's instructions. The bulb is stable at room temperature, but may still explode if dropped or otherwise mishandled. Whenever the lamp house, containing a xenon lamp, has to be dismantled or whenever the protective container or cloth has to be removed from the xenon lamp, authorized protective clothing MUST be worn!

**WARNING:** Always wear face protection (full face shield) when handling xenon lamps.

**WARNING:** Always wear protective clothing (welder's jacket) when handling xenon lamps.

**WARNING:** Always wear clean leather gloves with wrist protectors when handling xenon lamps.

This procedure assumes that the anode support assembly and the side cover are already removed from the Lamp House due to the removal of the xenon lamp.

## Required tools

- Torque Allen key.
- 22mm open-end wrench.
- Torque wrench with a 22mm hexagon socket.
- Torque wrench with a 8mm Allen socket.
- Torque wrench with a 5mm Allen socket.

## How to install the xenon lamp in the motorized S/M Lamp House?

1. Install the lamp cathode adapter on the cathode of the xenon lamp. Note that some xenon lamps have a cathode pin with screw threat (reference 10 Image 6–81). Screw the adaptor on the anode pin as far as possible. Make sure that there is full contact between the adapter flat surface and the lamp base. Fasten the set screw (reference 9 Image 6–81) of the cathode adapter with a torque of **2.5Nm** (1.84 lbf*ft). Use a torque wrench with a 5mm Allen socket.

   *Caution:* Ensure that the adaptor is clean. Periodically clean the adapter. Remove oxide from silver plated adaptor with standard household metal polish (E.g. Brasso).

   *Warning:* Install the cathode adapter prior to removing the protective container or protective cloth from the xenon lamp.

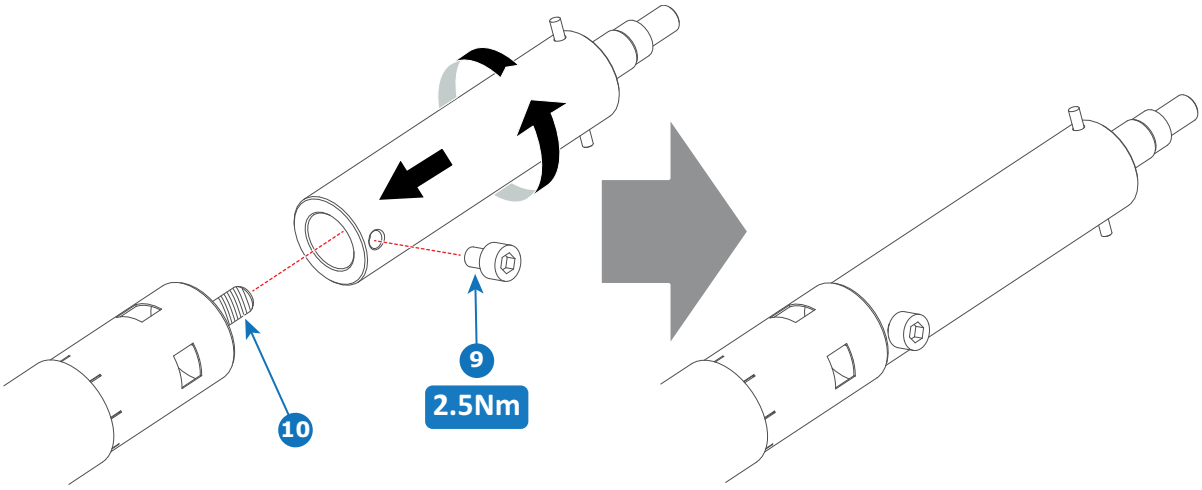


Image 6–81

2. Install the anode wire lug (reference 6 Image 6–82) upon the anode socket as illustrated. Use an 8mm Allen torque key set to **9Nm** (6.64lbf*ft) to secure the bolt (reference 8 Image 6–82). Place a flat washer (reference 7 Image 6–82) between the bolt and the wire lug.

*Warning:* Make sure that there is no tension on the anode wire of the xenon lamp.

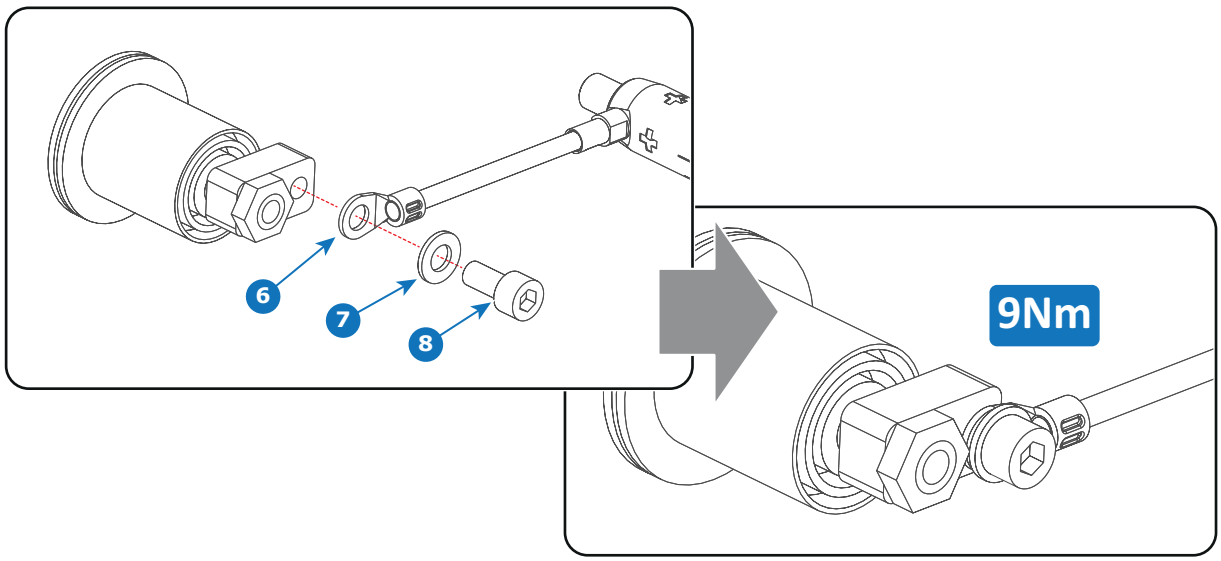


Image 6–82

*Tip:* Write down the serial number of the xenon lamp. You will need this while updating the lamp parameters after installation of the xenon lamp. The serial number of the xenon lamp is engraved in the neck of the xenon lamp.

3. Check the cathode connection inside the lamp house. Use an 22 mm open-end wrench to hold the first nut while fastening the second nut on the rod with a torque of **25Nm** (18.4 lbf*ft) using a torque wrench with 22 mm hexagon socket. Ensure that there is a flat washer at both sides of the wire lug. It's safer to do this check before the xenon lamp is installed to avoid accidental bumping against the xenon lamp.

*Tip:* The cathode socket can easily pulled out from the Lamp House as a whole to perform this check.

*Caution:* These cathode connections must be checked with every lamp change!

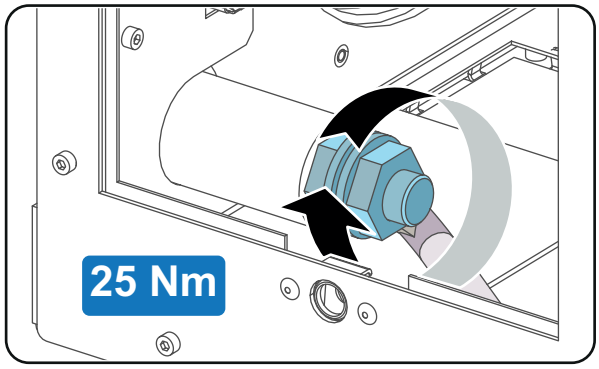


Image 6–83

4. Remove the protective packing from the xenon lamp and gently insert the xenon lamp into the Lamp House as illustrated. Lamp cathode first, Make sure that the wire of the lamp anode is upwards oriented. While inserting the lamp, rotate it slightly, **engaging the pins** (reference 11 Image 6–84) of the cathode adapter in the foreseen slots. This is to ensure the lamp cathode is completely inserted. Keep supporting the anode of the lamp with one hand once the xenon lamp is in position.

   *Caution:* Ensure that you wear protective clothing, a full face shield and protective gloves.

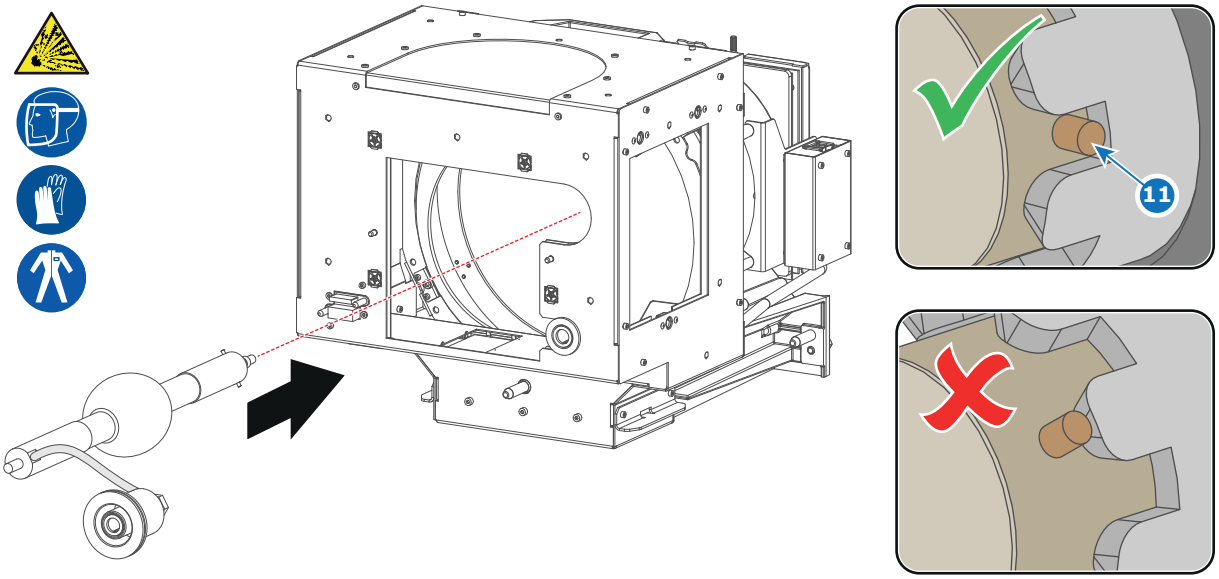


Image 6–84

5. Slide the anode connector in its position on the Lamp House as illustrated.

   *Caution:* Avoid any tension on the anode wire, ensuring there is no mechanical stress on the lamp.

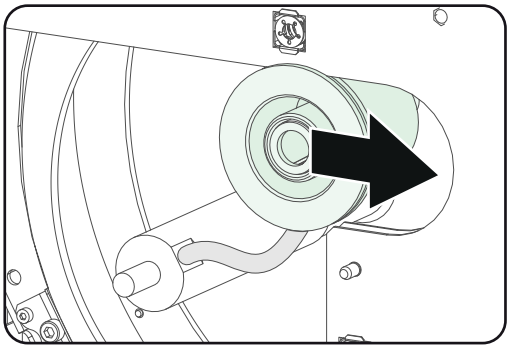

Image 6–85

6. Install the UV blocker assembly as illustrated. Use the opening at the side of the Lamp House to guide the anode pin of the xenon lamp into the anode supporting mechanism of the UV blocker.

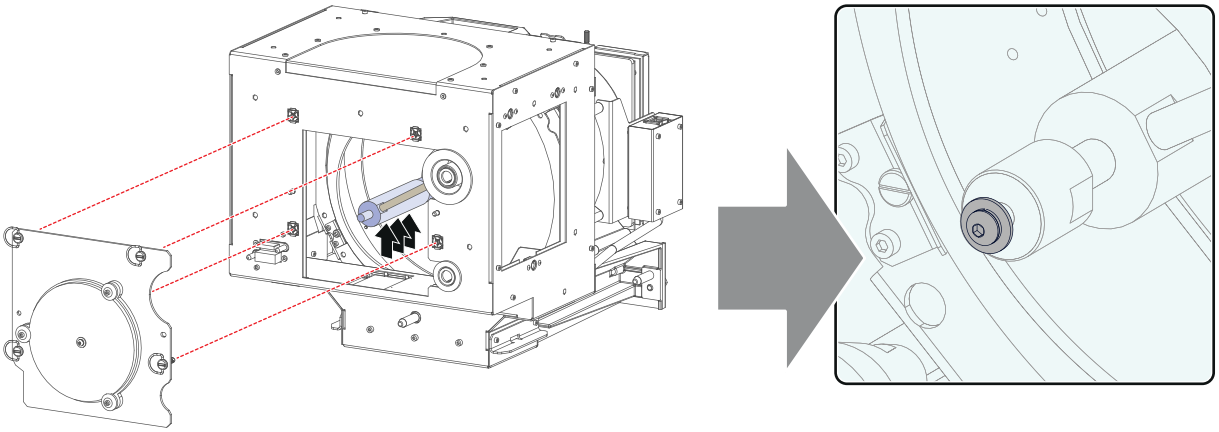

Image 6–86

7. Secure the UV blocker by fastening the four quarter turn screws (reference 5 Image 6–87) as illustrated.

   *Note:* Ensure that the quarter turn screws turning wires are flush with the cover or interference will occur while inserting the Lamp House into the projector.

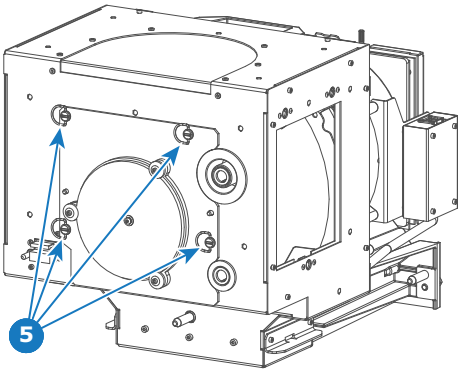


Image 6–87

8. Install the side cover of the Lamp House and fasten the three quarter turn screws (reference 4 Image 6–88) of the cover.

   *Note:* Please ensure that the quarter turn screws turning wires are flush with the cover or interference will occur while inserting the Lamp House into the projector.

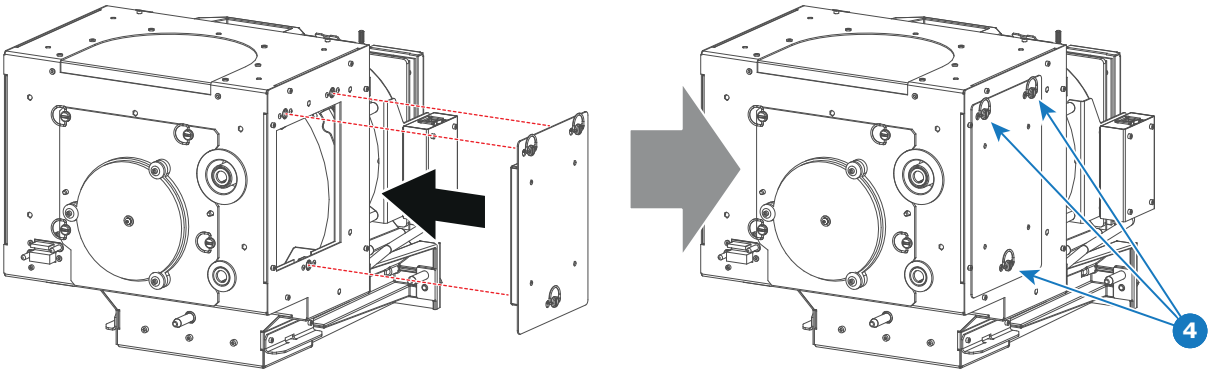


Image 6–88

9. Secure the xenon lamp cathode with the hexagon socket head cap screw (reference 1 Image 6–89), spring washer (reference 2 Image 6–89) and plain washer (reference 3 Image 6–89). Fasten the screw with a torque of **5 Nm** (3,7 lbf*ft). Use a torque wrench with a 5 mm Allen socket.

   *Caution:* The hexagon socket head cap screw must have a length of 55mm (not longer and not shorter).

   *Caution:* Make sure that both pins (reference 11Image 6–84 ) of the cathode adapter remain engaged in the foreseen slots.

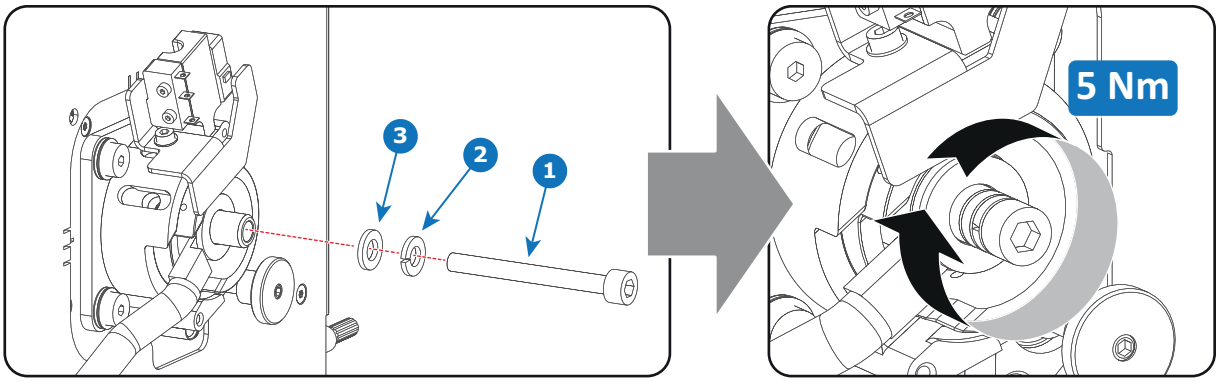


Image 6–89

**CAUTION:** The “LAMP INFO” parameters which are stored on a chip inside the Lamp House MUST be updated after each installation of an xenon lamp inside the Lamp House. Neglecting this update will result in poor performance and short life time of the xenon lamp.

A realignment of the xenon lamp in its reflector is required after the installation of the xenon lamp in the Lamp House.

# 6.13 Installation of the Lamp House

**WARNING:** This procedure may only be performed by qualified technical service personnel.

**CAUTION:** Due to its high internal pressure, the lamp may explode in either hot or cold states if improperly handled.

## Required tools

10mm nut driver or flat screw driver.

## How to install the Lamp House in the projector?

1. Check if the seven quarter turn screws turning wires (reference 1Image 6–90) are flush with the cover or interference will occur while inserting the Lamp House into the projector.

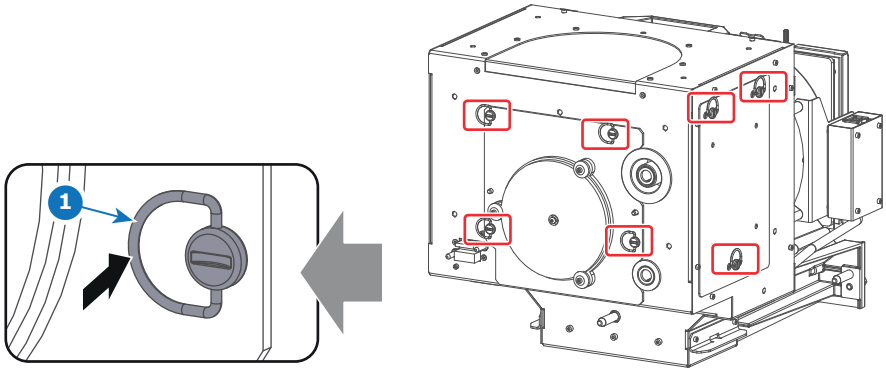


Image 6–90

2. Grip the Lamp House by both handles and place the front of the Lamp House on the base plate inside the lamp compartment of the projector, lining up the foot of the Lamp House with the slots on the base.
3. Push the Lamp House fully into the slots.
4. Secure the Lamp House by fastening the two retaining screws (reference 1 Image 6–91) at the base of the Lamp House.
5. Reinstall the cover of the Lamp House compartment.

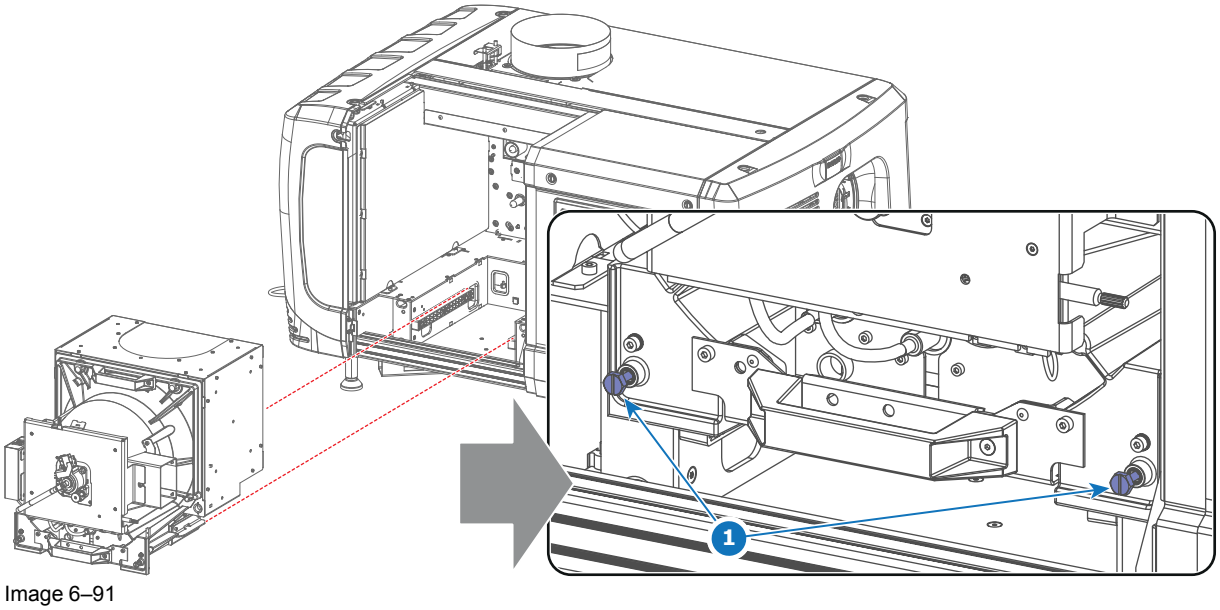


Image 6–91

# 6.14 Resetting lamp parameters & lamp alignment

## About resetting Lamp parameters

To set the value for run time and the number of strikes back to zero and to reset the remaining run time a reset of the lamp parameters is required after installing a new lamp. This chapter contain the procedure for “Resetting the lamp parameters”, page 120.

## About lamp alignment

Due to ageing of the lamp, the light output will be reduced if no corrective actions are taken. To bring the light output again on its normal level, lamp alignment should be performed on a regular time. Also when the lamp is replaced physically the alignment procedure has to be done. Normal Z-axis alignment is enough to bring the light output again on its normal level. But sometimes, alignment of the other axes are also necessary to reach the maximum light output. Depending on the used lamp house, these alignments can be done manually on the lamp house itself or motorized by tipping on the motor keys in the lamp alignment menu of the Communicator software. This chapter contains the procedures for “Automatic lamp alignment motorized lamp house”, page 124, and for “Manual lamp alignment for motorized lamp house”, page 126.

For more info about the Communicator software see user guide of the Communicator which is available on *https://my.barco.com*.

## 6.14.1 Resetting the lamp parameters

**CAUTION:** The “LAMP INFO” parameters MUST be updated after each installation of a xenon lamp inside the Lamp House. Neglecting this update will result in poor performance and short life time of the xenon lamp.

### For a new lamp, how to reset the values

1. While the *Lamp information* window is displayed, click on **Change lamp** (1).

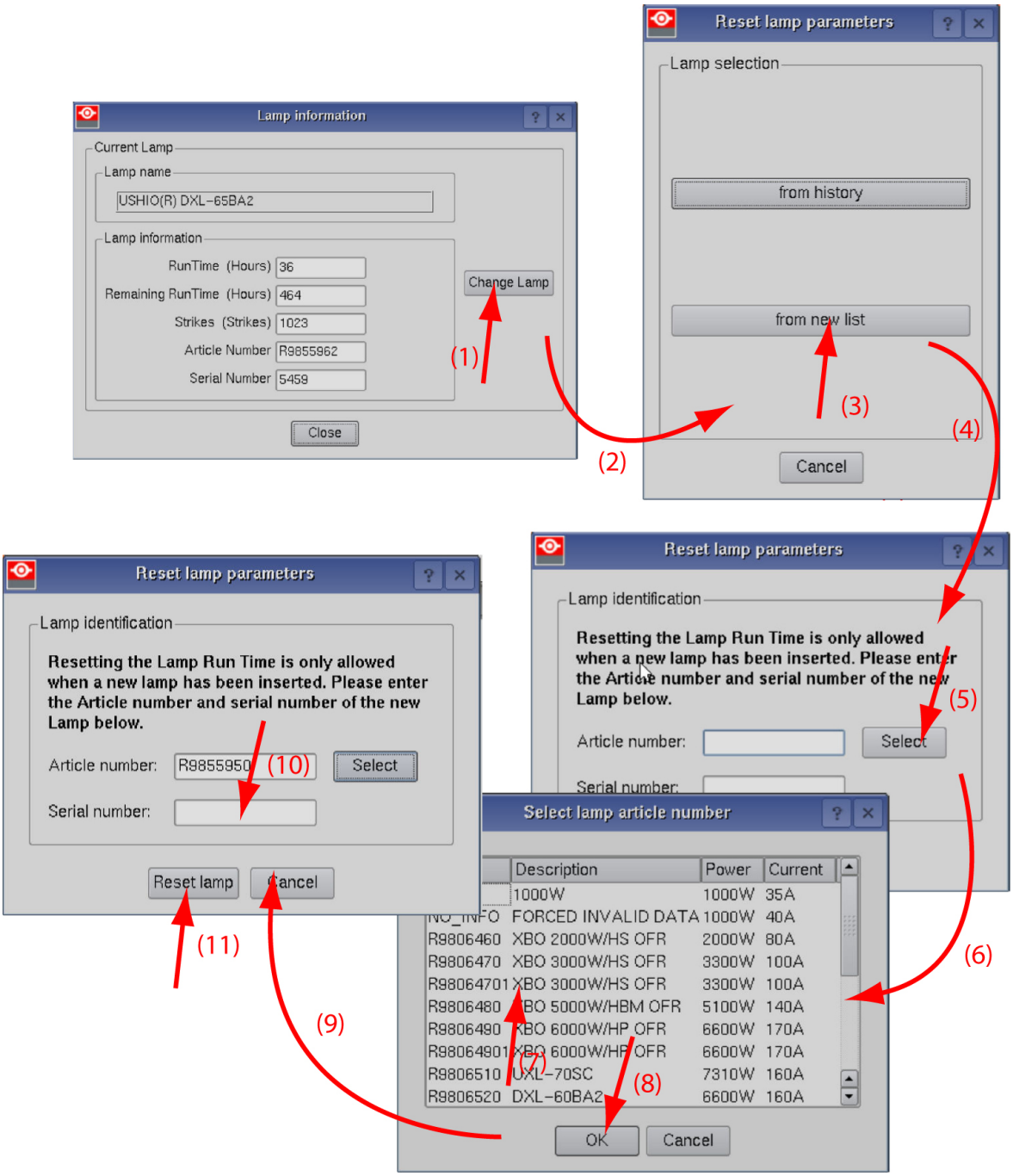


Image 6–92 Reset lamp info, new lamp

A Reset lamp parameters selection window opens (2).

2. To get new lamps, click on **From new list** (3).

   The lamp article and serial number opens (4).

3. Fill out the article number of the new lamp (5a)

   or

   click on **Select** (5b) to display a list of possible article numbers (6). Select a article number (7) and click **OK** (8).

   The software will check if the entered article number is a valid number (9).

4. Fill out the serial number of the lamp (10).

5. Click **Reset lamp** (11).

## For a used lamp, how to set back the original values

1. While the *Lamp information* window is displayed, click on **Change lamp** (1).

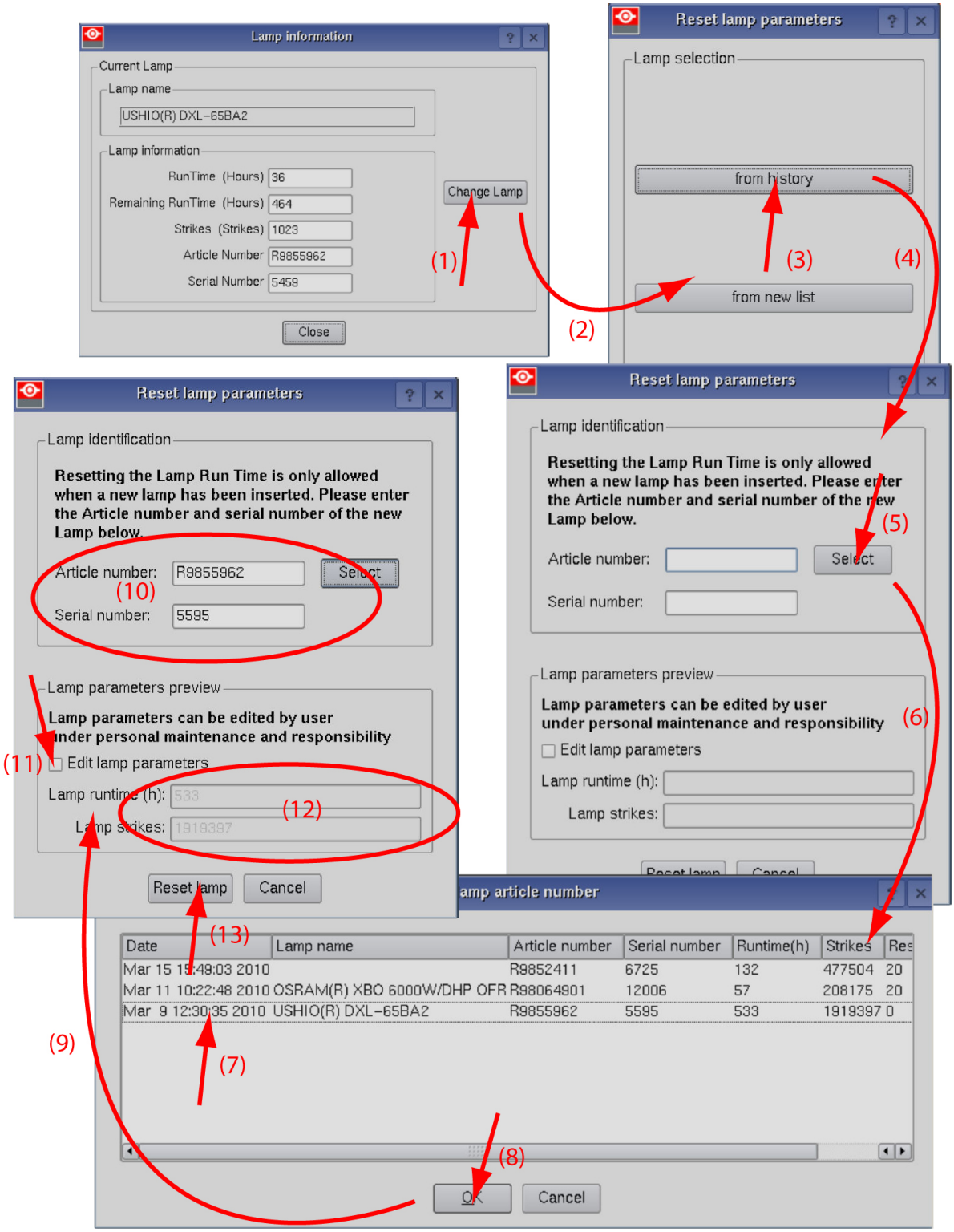


Image 6–93 Reset lamp info, used lamp

A *Reset lamp parameters* window opens (2).

2. To get history of the used lamps, click **from history** (3).

   The Reset lamp history selection window opens (4).

3. Click on **Select** (5) to display a list of possible lamps (6).

4. Select the desired lamp (7) and click **OK** (8).

   The article number and serial number of the selected lamp is added to the *Reset lamp parameters* window (10). The lamp run time and number of strikes of this lamp are added in *Lamp parameter preview* (12).

5. The lamp parameters can be edited by the user under personnel maintenance and responsibility. If you want to change these parameters, check the check box in front of *Edit lamp parameters* (11).

   The current parameter fields become active (12).

6. Click in an input field and change to the desired value.

7. Click **Reset lamp** (13).

## 6.14.2 Automatic lamp alignment motorized lamp house

### What can be done?

Both automatic lamp alignment functions adjust the lamp in either the Z-axis or in all axis to obtain the maximum light output. Wait until the process stops or interrupt the processes by stopping it manually.

### How to fast align?

1. While the automatic *Lamp alignment* is selected and the *Lamp alignment* window is open, click on **Automatic** tab.
2. Click on **Start Fast alignment (Z-axis only)**.

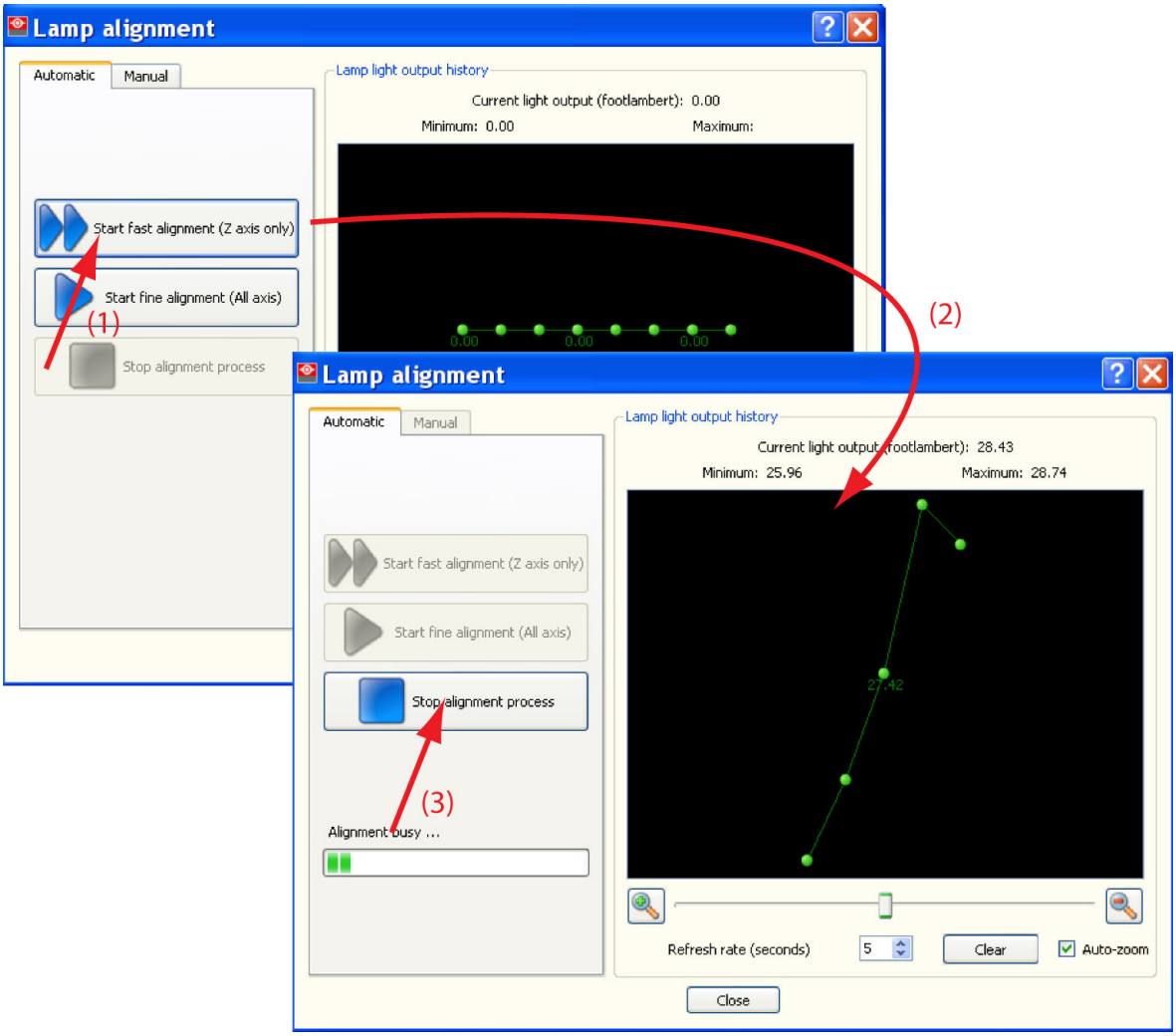


Image 6–94 Lamp alignment, Z-axis

The software starts with the alignment. The intermediate light output results can be followed on the preview graph.

Once the light output reaches its maximum value the process stops automatically.

3. To interrupt the alignment procedure, click on **Stop Alignment process**.

### How to fine align?

1. While the automatic *Lamp alignment* is selected and the *Lamp alignment* window is open, click on **Automatic** tab.
2. Click on **Start fine alignment (all axis)**.

The software starts with the alignment. The intermediate light output results can be followed on the preview graph.

The alignment can take a while. Once the light output reaches its maximum value the process stops automatically.

3. To interrupt the alignment procedure, click on **Stop Alignment process**.

## 6.14.3 Manual lamp alignment for motorized lamp house

### What can be done?

The light output of the lamp can be adjusted manually using the motor functions on the lamp house or by turning manually on the adjustment knobs on the lamp house. In both cases a preview is given in the *Lamp light output history*.

Z-axis alignment is the fast alignment to improve the light output. While the X and Y axis alignment is fine alignment to further improve the light output.

### How to align?

1. For the Z-axis alignment, click on left or right arrow keys below *Z alignment*.

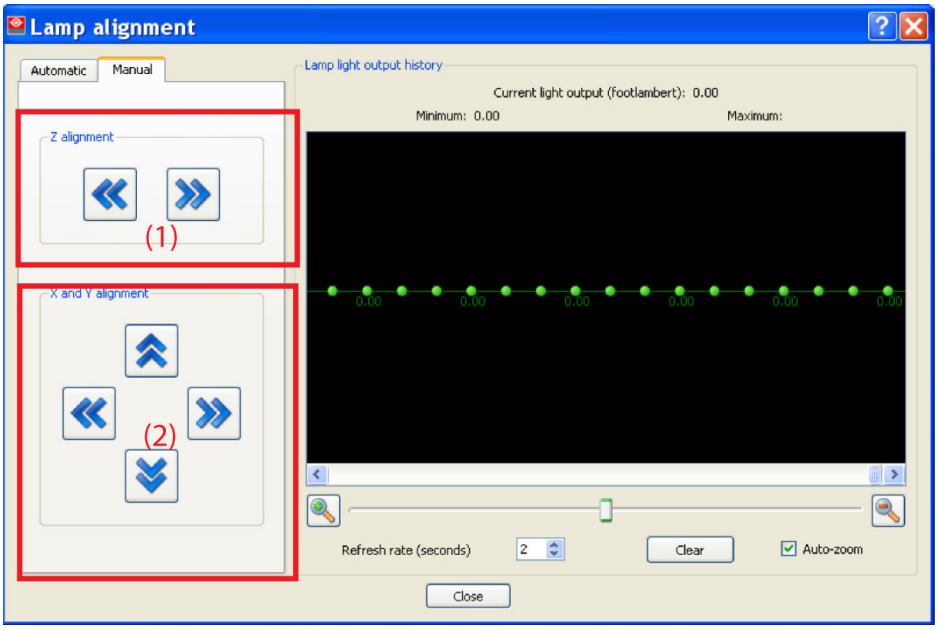


Image 6–95

Click first in one direction and look to the preview to see if there is an improvement. If there is an improvement, continue in the same direction. If not, click in the other direction until the maximum light output is obtained.

2. For a fine adjustment, adjust the X and Y axis. Click on the corresponding buttons.

   Adjust the X-axis (left - right keys) and the Y-axis (up down keys) for maximum current light output (Footlambert Measured). Carefully adjust for maximum light output. Once over the maximum, click slightly in opposite direction to reach the maximum light output again.

   Do this for each direction and minimum repeat this adjustment cycle twice.

# 6.15 Replacement of the Lamp Info module

This procedure requires that the Lamp House is removed from the projector.

## Required tools

- 6mm nut driver.
- 3mm Allen wrench (depends on design).

## How to replace the Lamp Info module?

1. Remove the cover of the Lamp Info module by releasing the four screws (or short spacers) as illustrated (reference 1).

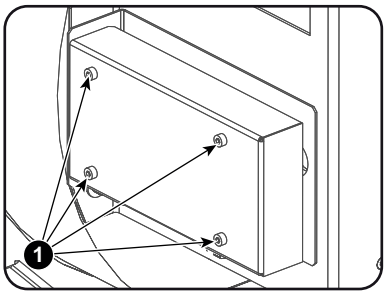


Image 6–96 Lamp info module cover

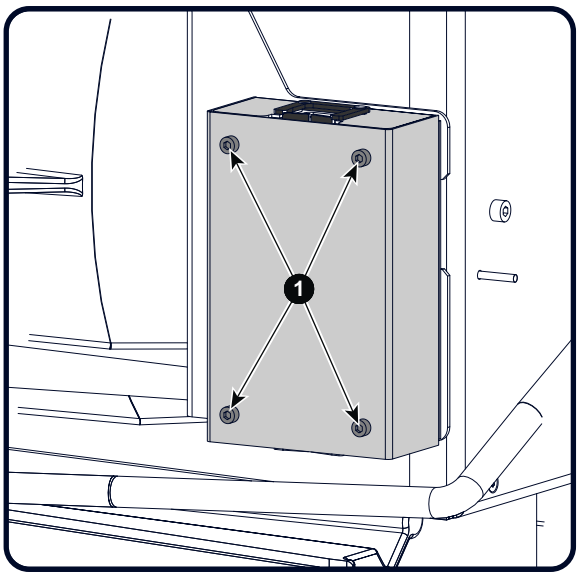


Image 6–97 Lamp info module cover on second generation lamp house

2. Disconnect all wire units (reference 1, 2, 3 and 4) from the Lamp Info module.

*Note:* In case of a manual Lamp House the wire units with reference 2, 3 and 4 are omitted.

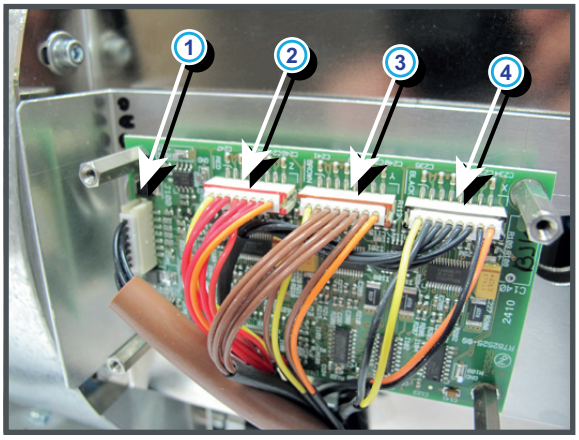


Image 6–98 Connections lamp info module

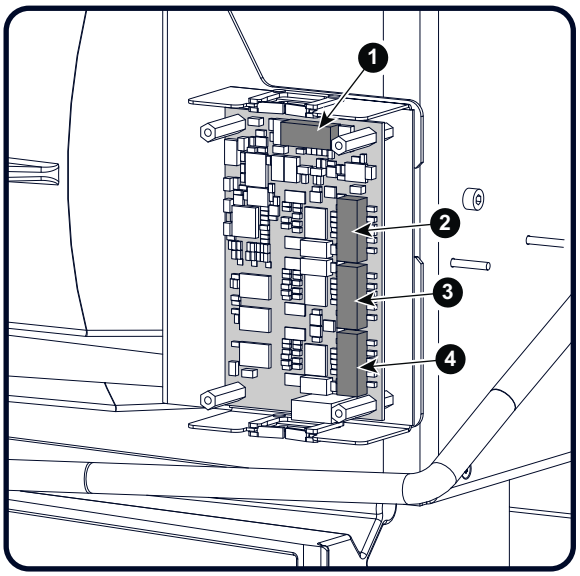


Image 6–99 Connections lamp info module on a second generation lamp house

3. Remove the Lamp Info module from the Lamp House by releasing the four spacers as illustrated. Use for that a 6 mm nut driver.

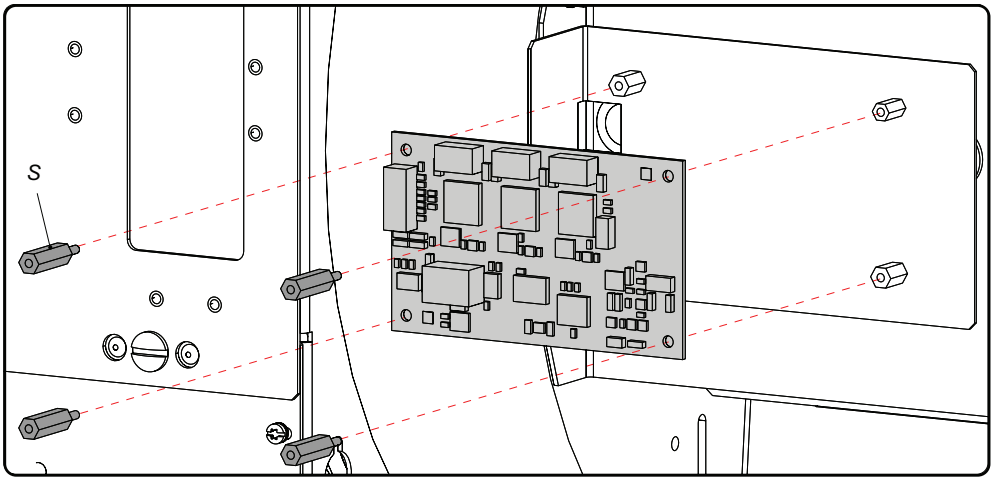


Image 6–100 Removing lamp info module

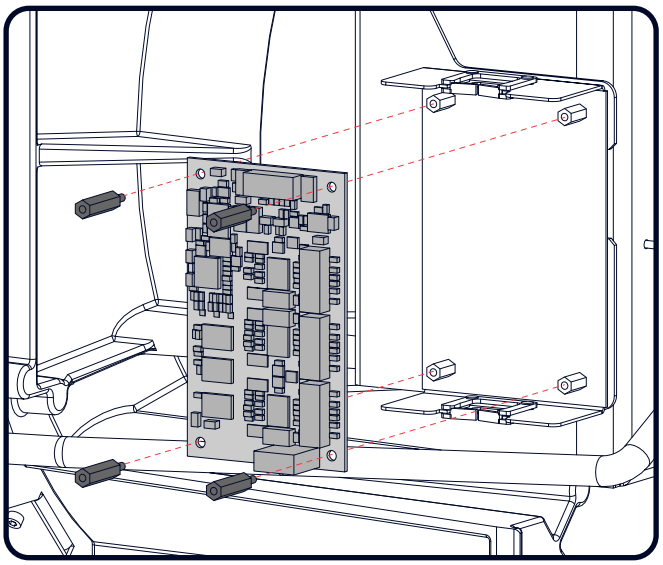

Image 6–101 Removing lamp info module on a second generation lamp house

4. Reinstall a new Lamp Info module and fasten with four spacers. Use a 6 mm nut driver.

   *Note:* Make sure that the Lamp Info module is correctly oriented. See corresponding drawing.

5. Reconnect all three wire units (reference 2, 3 & 4) from the stepper motors (if motorized lamp house) and the wire unit (reference 1) from the Lamp House with the Lamp Info module. Respect the color marking on the connectors.

6. Reinstall the cover of the Lamp Info module as illustrated. Fasten with four screws (or short spacers) (reference 1).

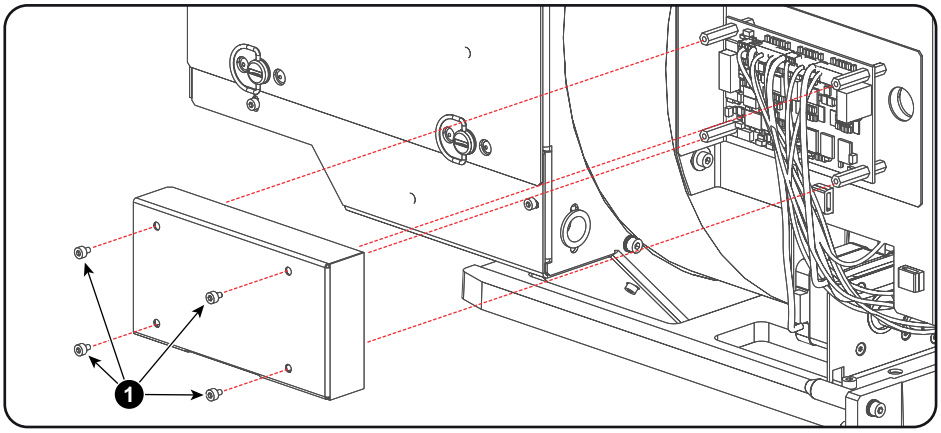


Image 6–102 Lamp info module on lamp house

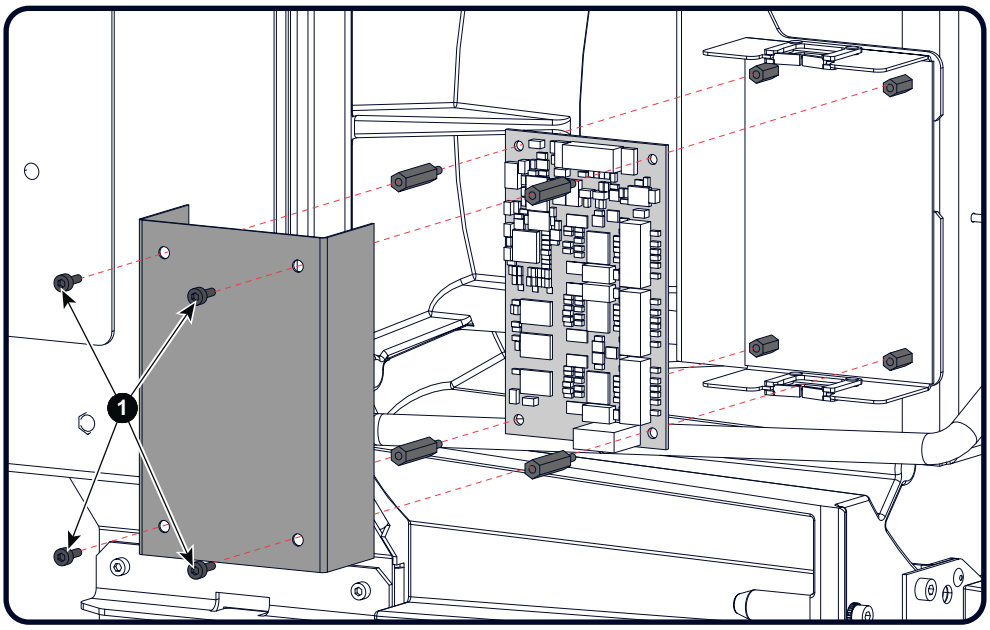


Image 6–103 Lamp info module on second generation lamp house

# 6.16 Replacement of the UV blocker

This procedure requires that the Lamp House is removed from the projector. Futhermore, this procedure is applicable upon a Lamp House equipped with an UV blocker with an integrated anode support instead of a three leg anode support. It is recommended to replace a three leg anode support with an integrated anode support. The three leg anode support is no longer available.

**CAUTION:** The person that performs this procedure MUST be wearing a full face shield with neck protector, a welder's jacket and clean leather gloves with wrist protectors. This is required to safely dismantle or assemble the lamp house, which contains a xenon lamp.

## Required tools

- 2,5 mm Allen wrench.
- Latex or cotton gloves.

## How to replace the UV blocker with integrated anode support?

1. Remove the side cover of the Lamp House by releasing the two quarter turn screws (reference 1 Image 6–104) at the bottom of the side cover as illustrated.

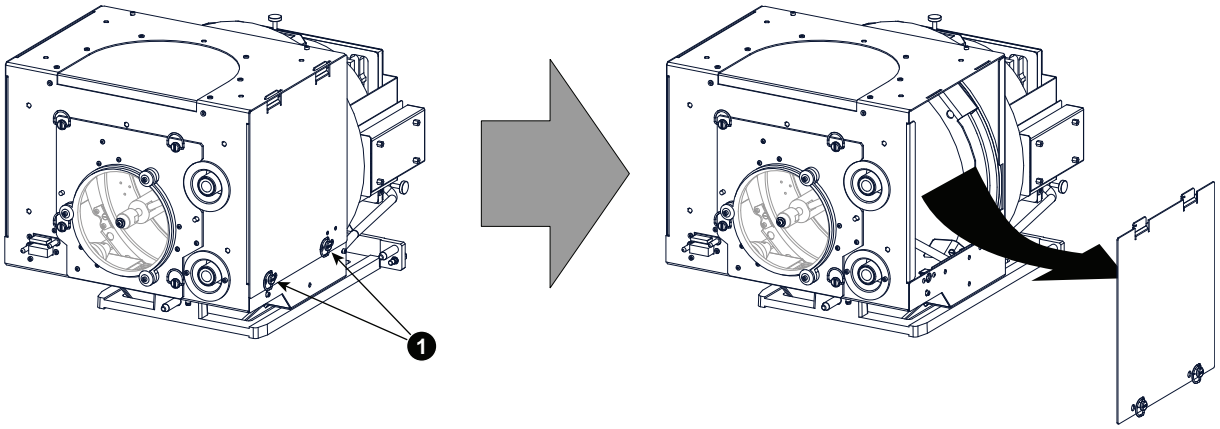


Image 6–104

2. Release the four quarter turn screws (reference 2 Image 6–105) of the UV blocker assembly as illustrated. Make sure that the anode support remains in its position while releasing the screws.

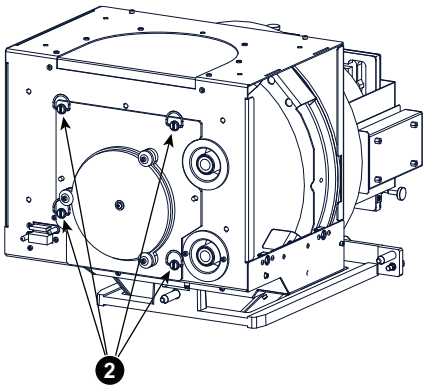


Image 6–105

3. Support the xenon lamp inside the lamp house with one hand while removing the UV blocker assembly from the Lamp House. Note that some xenon lamps are installed with an anode adaptation bushing (reference 12 Image 6–106).

*Caution:* Ensure that you wear protective clothing, a full face shield and protective gloves.

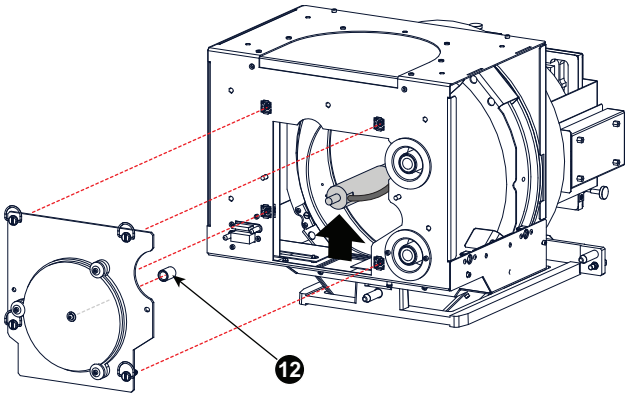


Image 6–106

4. Remove one of the three washers (reference 2 Image 6–107) which secure the UV blocker. Use a 2,5 mm Allen wrench to loosen the hexagon socket head cap screw (reference 1 Image 6–107).

   *Note:* The fixation screws may be secured with threadlocker. Only in case of frequently transported projectors it is necessary to apply threadlocker to the screws again. This is not needed in case of a Digital Cinema projector.

5. Loosen the fixation screws of the remaining two washers with a few turns. Use a 2,5 mm Allen wrench.

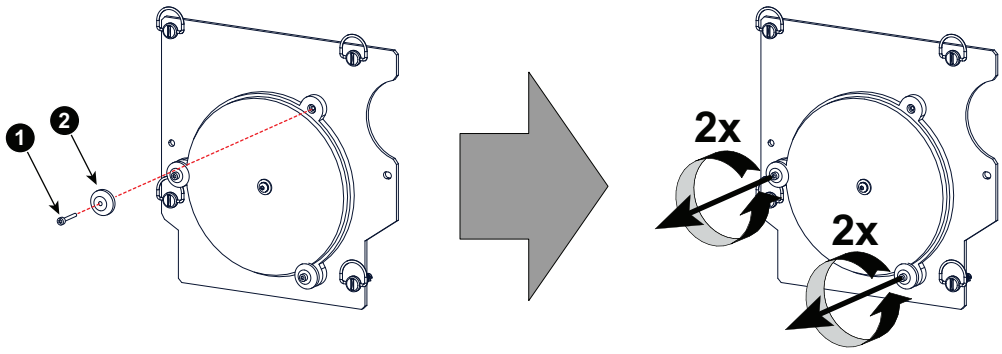


Image 6–107

6. Replace the UV blocker with integrated anode support with a new one.

   *Caution:* Do not touch the new UV blocker with bare fingers. Wear latex or cotton gloves.

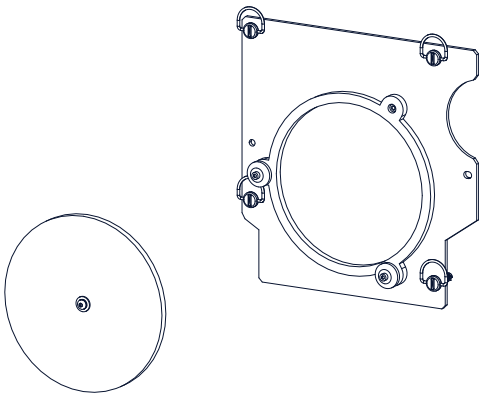

Image 6–108

   *Note:* One side of the UV blocker is marked with a white dot on the border. The UV blocker must be mounted so that the glass side with the white dot is the outer side of the Lamp House.

7. Fasten the three spacers which hold the UV blocker. Use a 2,5 mm Allen wrench.

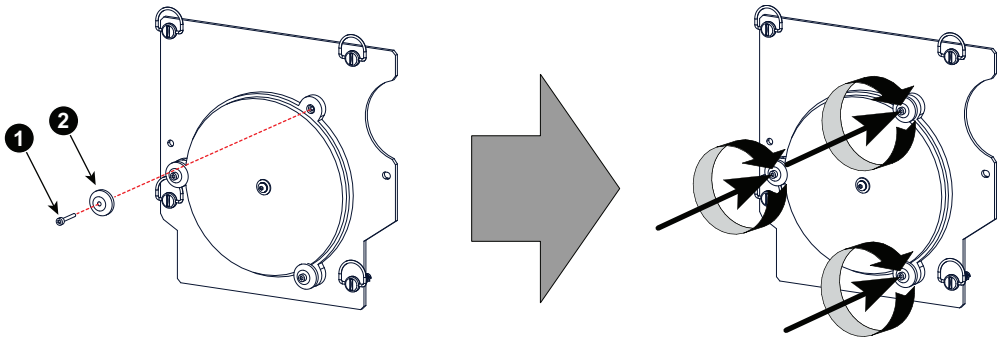


Image 6–109

*Note:* Notwithstanding that the fixation screws were original glued it is now not needed to apply glue on the fixation screws. The glue was be default applied at factory because this part is used on several common platforms. Digital Cinema projectors do not require that these screws are fixated with glue.

8. Install the UV blocker assembly as illustrated. Make sure that the xenon lamp is properly supported by the lamp supporting mechanism. Use the opening at the side of the Lamp House to guide the supporting pin of the xenon lamp into the supporting mechanism. Make sure that the tick wire of the lamp anode is upwards oriented.

   *Caution:* Do not forget to use an anode adaptation bushing in case one is needed for the xenon lamp inside the Lamp House.

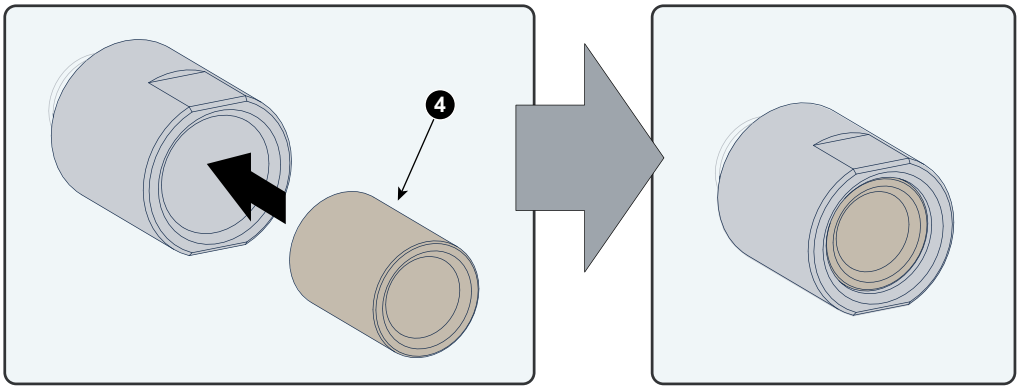


Image 6–110

*Tip:* Check if the UV blocker is clean. If not, see procedure "Cleaning the UV blocker of the Lamp House", page 149, before installing the UV blocker assembly on the Lamp House.

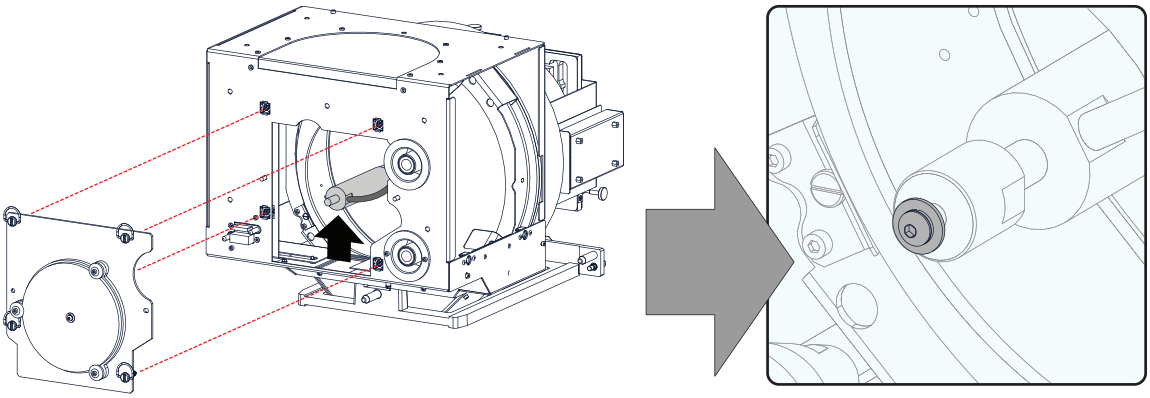

Image 6–111

9. Secure the UV blocker by fastening the four quarter turn screws (reference 2 Image 6–112) as illustrated.

   *Note:* Please ensure that the quarter turn screws turning wires are flush with the cover or interference will occur while inserting the Lamp House into the projector.

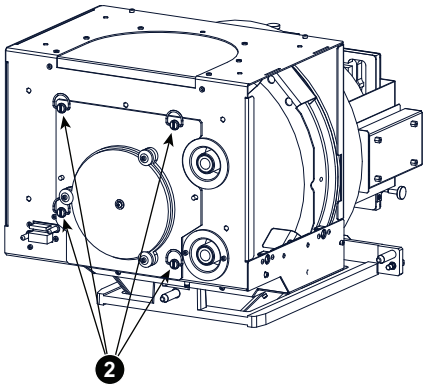


Image 6–112

**10.** Install the side cover of the Lamp House and fasten the two quarter turn screws (reference 1 Image 6–113) at the bottom of the cover.

*Note:* Please ensure that the quarter turn screws turning wires are flush with the cover or interference will occur while inserting the Lamp House into the projector.

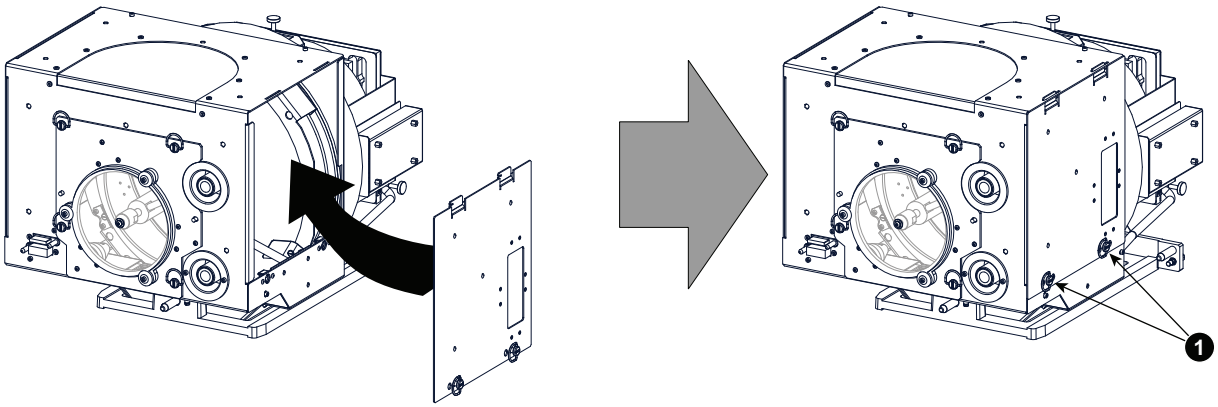


Image 6–113

# 6.17 Replacement of the Lamp Reflector

## Lamp Reflector assembly for S/M Lamp House and for XL Lamp House

The Lamp Reflector assembly of the Lamp House has three major parts. One metal mounting ring, one spheric glass mirror and one elliptic glass mirror. Both mirrors are assembled on the metal ring and are perfectly aligned with each other. The S/M Lamp House and the XL Lamp House have a different Reflector assembly. Nevertheless, the same replacement procedure is applicable for both projector types.

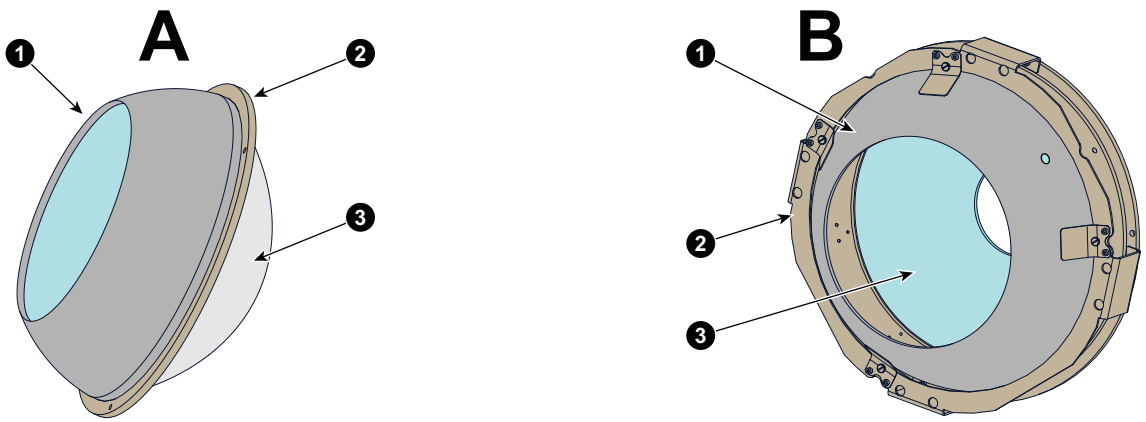


Image 6–114

**A1** Spheric glass mirror S/M Lamp House
**A2** Metal mounting ring S/M Lamp House
**A3** Elliptic glass mirror S/M Lamp House

**B1** Spheric glass mirror XL Lamp House
**B2** Metal mounting ring XL Lamp House
**B3** Elliptic glass mirror XL Lamp House

This procedure assumes that there is no lamp installed inside the Lamp House and that the side cover of the Lamp House is already removed.

**CAUTION:** Do not touch the glass of the reflector assembly while unpacking and installing. Hold the reflector assembly by its metal mounting ring.

## Required tools

- Two 22 mm open-end wrenches.
- Torque wrench with 22 mm hexagon socket.
- 2,5 mm Allen wrench.
- 3 mm Allen wrench.

## How to replace the Reflector of the Lamp House?

1. Disconnect the cathode wire lug (reference 3 Image 6–115) from the Lamp House as illustrated. Use two 22 mm open-end wrenches to release the nuts (reference 4 & 5 Image 6–115).

   *Tip:* Place the plane washers (reference 6 & 7 Image 6–115) and nut back on the rod after the lug is removed.

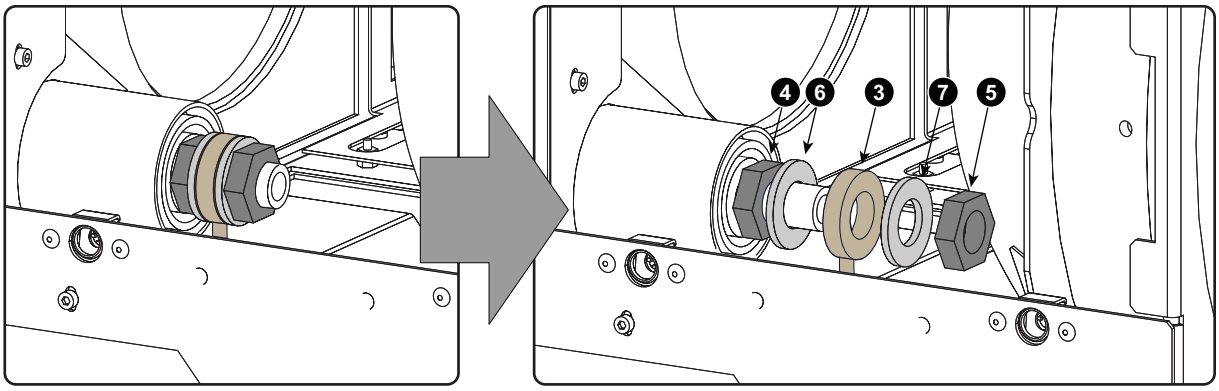


Image 6–115

2. Remove the corner plate of the Lamp House as illustrated. Use a 2,5 mm Allen wrench to loosen the four screws (reference 1 Image 6–116) which hold the plate.

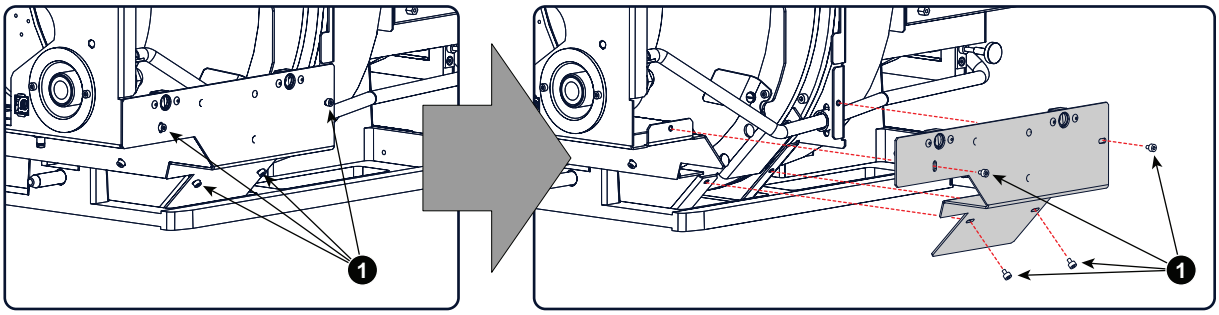


Image 6–116

3. Cut the cable tie (reference 2 Image 6–117) of the wire unit from the Lamp Info module. This gives the wire unit more play when removing the front assembly of the Lamp House.

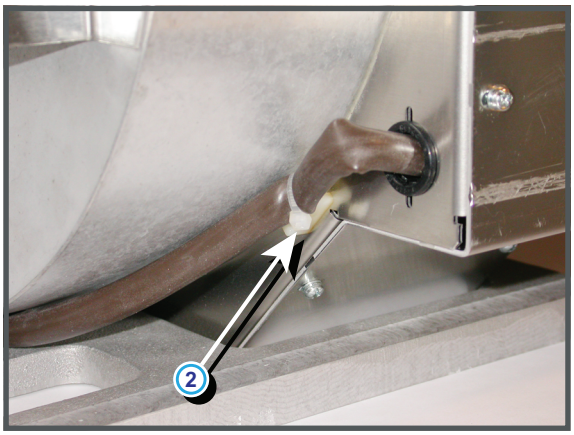


Image 6–117

4. Remove the front assembly of the Lamp House by loosening the 8 indicated screws (reference 3 Image 6–118). Use a 2,5 mm Allen wrench.

*Caution:* Do not damage the wire unit (reference 4 Image 6–118). The front assembly is still connected via the wire unit of the Lamp Info module with the base of the Lamp House. This wire unit has some play so that you can turn the front assembly away from the Lamp House.

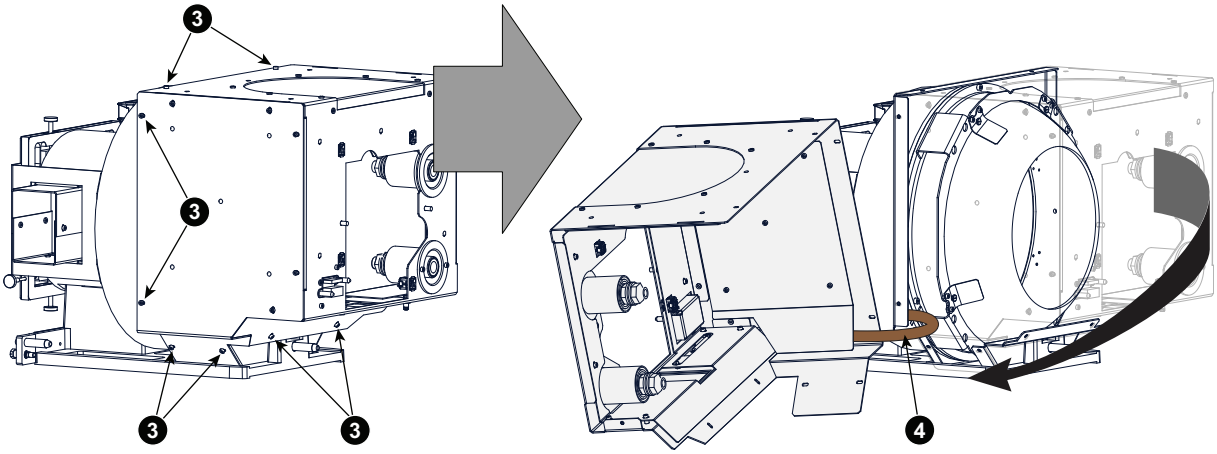


Image 6–118

5. Remove the Reflector assembly from the Lamp House by loosening the three hexagon socket head cap screws (reference 5 Image 6–119) as illustrated. Use a 3 mm Allen wrench.

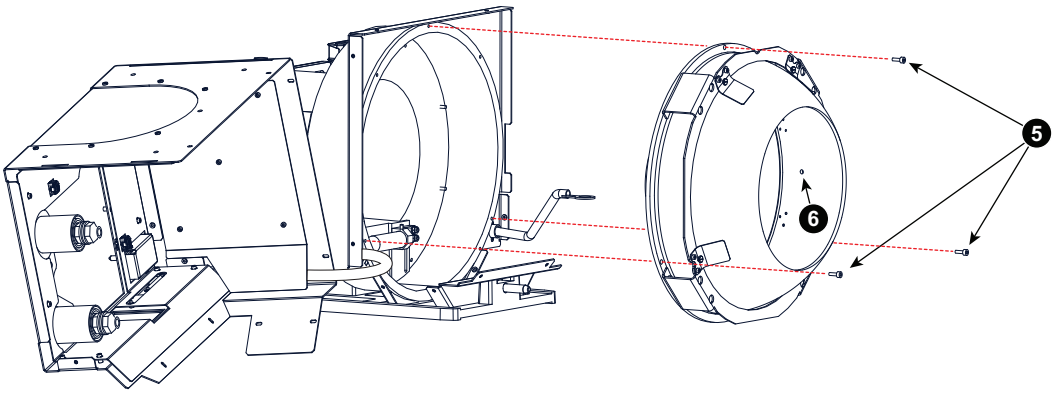


Image 6–119

6. Place a new Reflector assembly in the Lamp House and fasten with 3 hexagon head cap screws. Use a 3 mm Allen wrench to fasten the screws (reference 5 Image 6–119).

   *Caution:* Do not touch the glass of the Reflector assembly. Hold the Reflector assembly by its metal mounting ring.

7. Reinstall the front assembly of the Lamp House. Use a 2,5 mm Allen wrench to fasten the 8 hexagon head cap screws (reference 3 Image 6–118).

   *Caution:* Take care that the wire unit (reference 4 Image 6–118) of the Lamp Info module does not get jammed.

8. Fasten the wire unit with a cable tie (reference 2 Image 6–117).

9. Reinstall the corner plate of the Lamp House. Use a 2,5 mm Allen wrench to fasten the 4 hexagon head cap screws (reference 1 Image 6–116.

10. Reconnect the cathode wire with the Lamp House. Make sure to place a plane washer (reference 6 and 7 Image 6–115) between the nuts and the wire lug (reference 3 Image 6–115). Use a torque of **25 Nm** (18,4 lbf*ft) to fasten the nuts (reference 4 and 5 Image 6–115). Block the first nut (reference 4 Image 6–115) with a 22 mm open-end wrench while applying a torque of 25 Nm on the second nut (reference 5 Image 6–115) with a torque wrench.

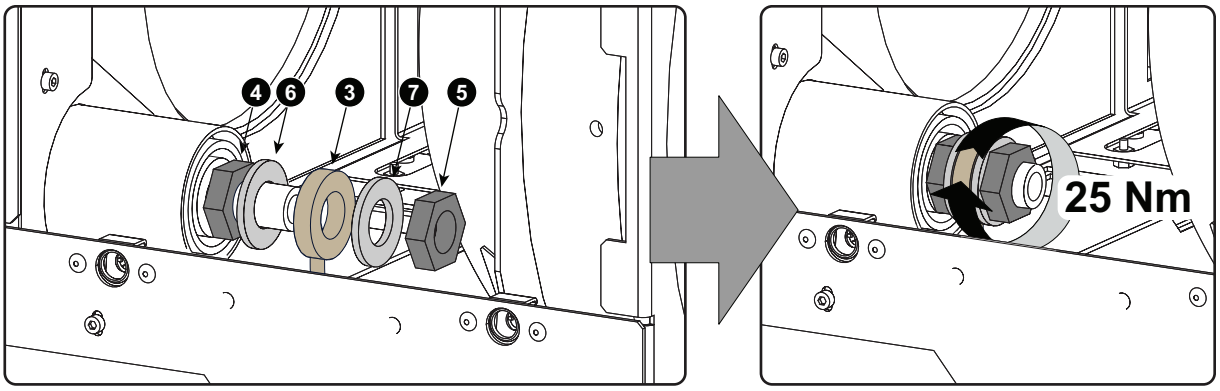


Image 6–120

The Lamp House is now ready to install an xenon lamp.

It is recommended for optimal performance to readjust the Cold Mirror after the replacement of the Lamp Reflector. See procedure “Adjusting the Cold Mirror”, page 205.

# 6.18 Replacement of the Lamp Reflector (second generation)

## Lamp Reflector assembly for XL Lamp House

The second generation Lamp Reflector assembly can be used in the old and the second generation lamp houses. The build-in procedure in the old lamp houses is the same as described in “Replacement of the Lamp Reflector”, page 135. The procedure for the second generation lamp houses is described hereafter. The reflector has three major parts and two sets of mounting holes, one set for the old lamp house and one set for the new generation lamp house.

The following parts can be distinguished: one metal mounting ring, one spheric glass mirror and one elliptic glass mirror. Both mirrors are assembled on the metal ring and are perfectly aligned with each other.

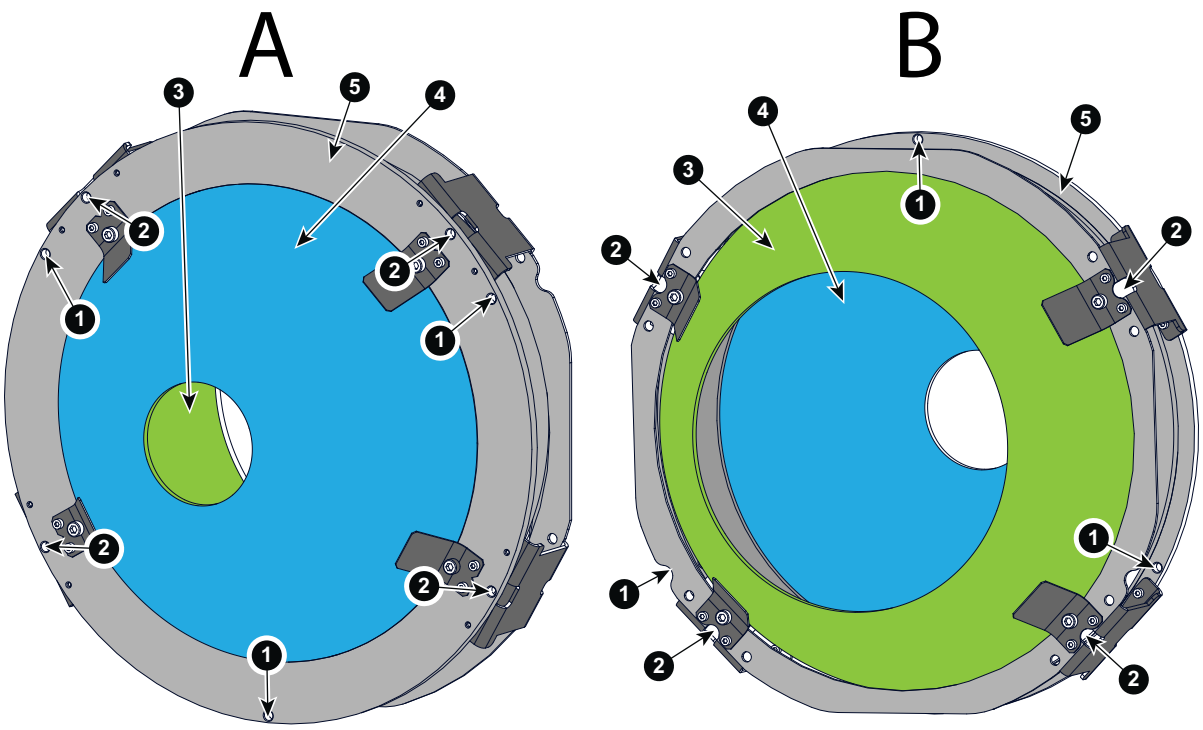


Image 6–121

**A** Back view , side ti be mounted to lamp house
**B** Front view
**1** Mounting holes for old lamp house
**2** Mounting holes for second generation lamp house
**3** Spheric glass mirror
**4** Elliptic glass mirror
**5** Metal mounting ring

## How to replace the reflector assembly

1. Disconnect the cathode wire lug (reference 3 Image 6–122) from the Lamp House as illustrated. Use two 22 mm open-end wrenches to release the nuts (reference 4 & 5 Image 6–122).

   *Tip:* Place the plane washers (reference 6 & 7 Image 6–122) and nut back on the rod after the lug is removed.

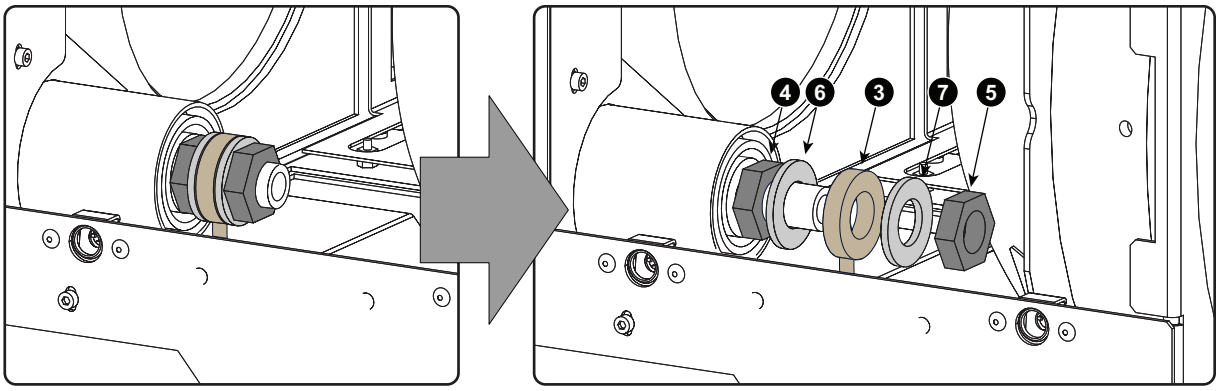


Image 6–122 Cathode wire lug

2. Cut the cable tie (reference 2 Image 6–123) of the wire unit from the Lamp Info module. This gives the wire unit more play when removing the front assembly of the Lamp House.

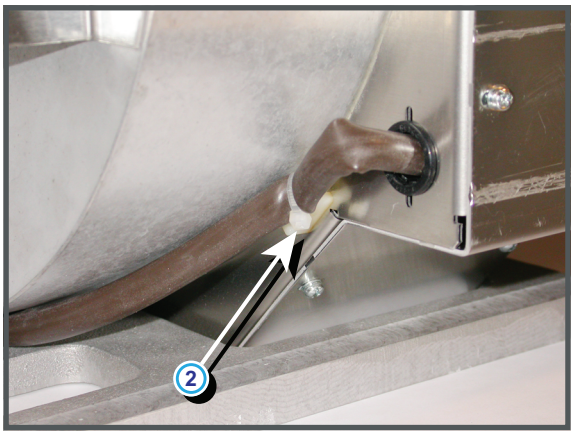


Image 6–123

3. Remove the 13 indicated screws (reference 1 Image 6–124). Use a 2,5 mm Allen wrench.

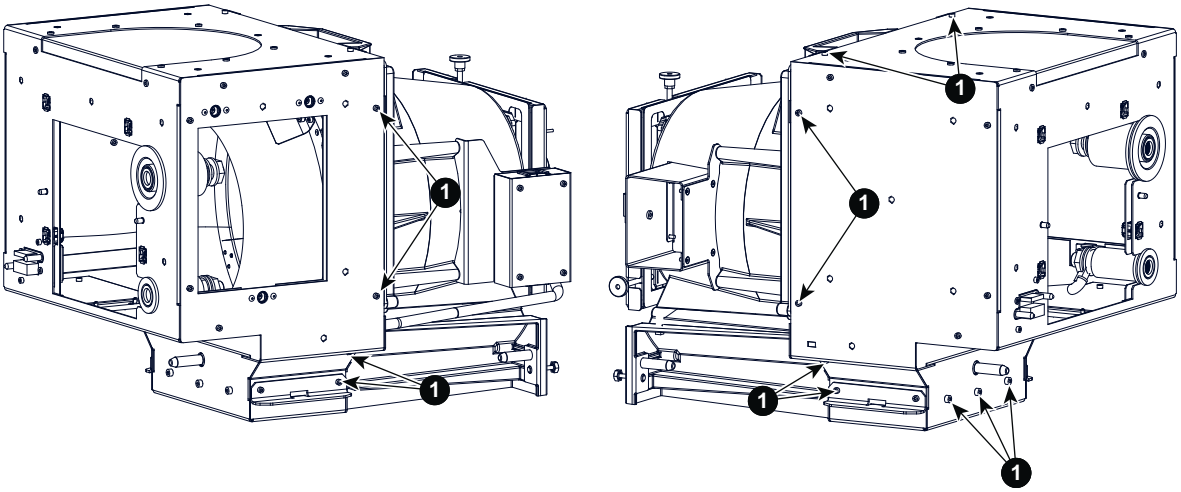


Image 6–124

4. Slide the front assembly a little bit to the front and turn it over as indicated.

*Caution:* Do not damage the wire unit (reference 3 Image 6–125). The front assembly is still connected via the wire unit of the Lamp Info module with the base of the Lamp House. This wire unit has some play so that you can turn the front assembly away from the Lamp House.

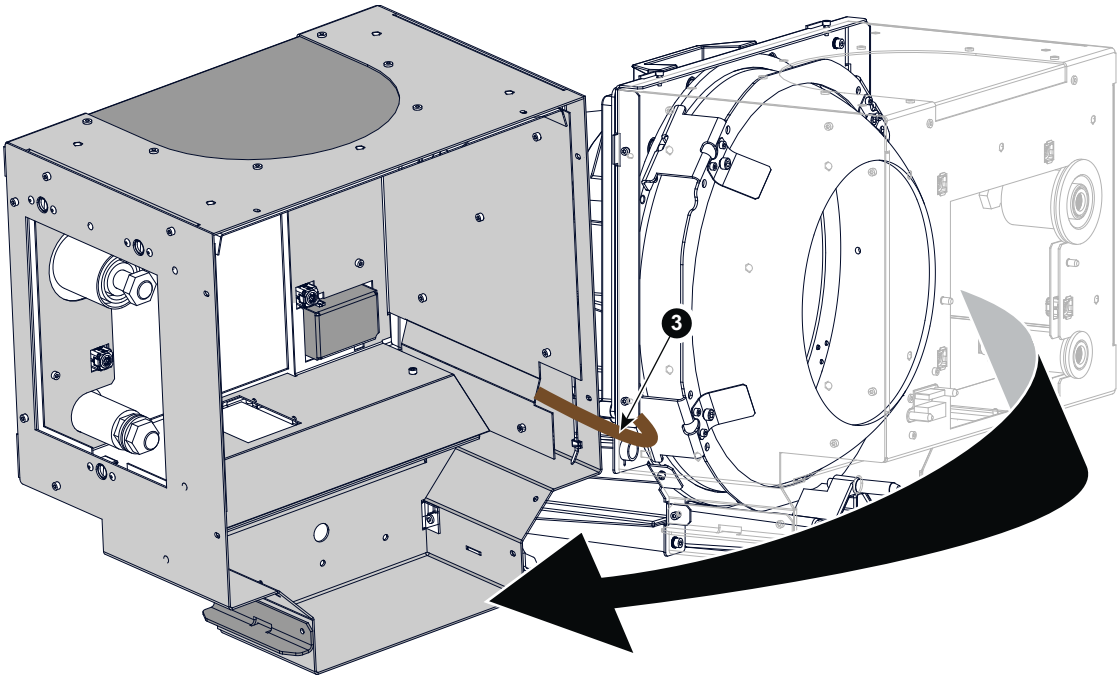


Image 6–125

5. Remove the Reflector assembly from the Lamp House by loosening the four hexagon socket head cap screws (reference 6 Image 6–126) via the indicated holes (reference 6) as illustrated. Use a 3 mm Allen wrench.

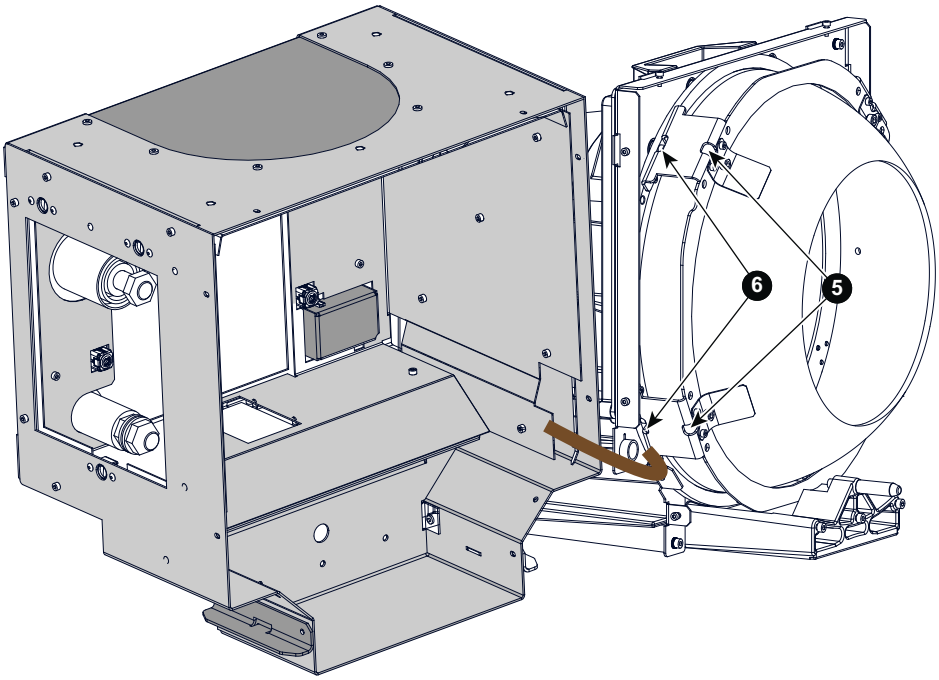


Image 6–126 Remove fixation screws

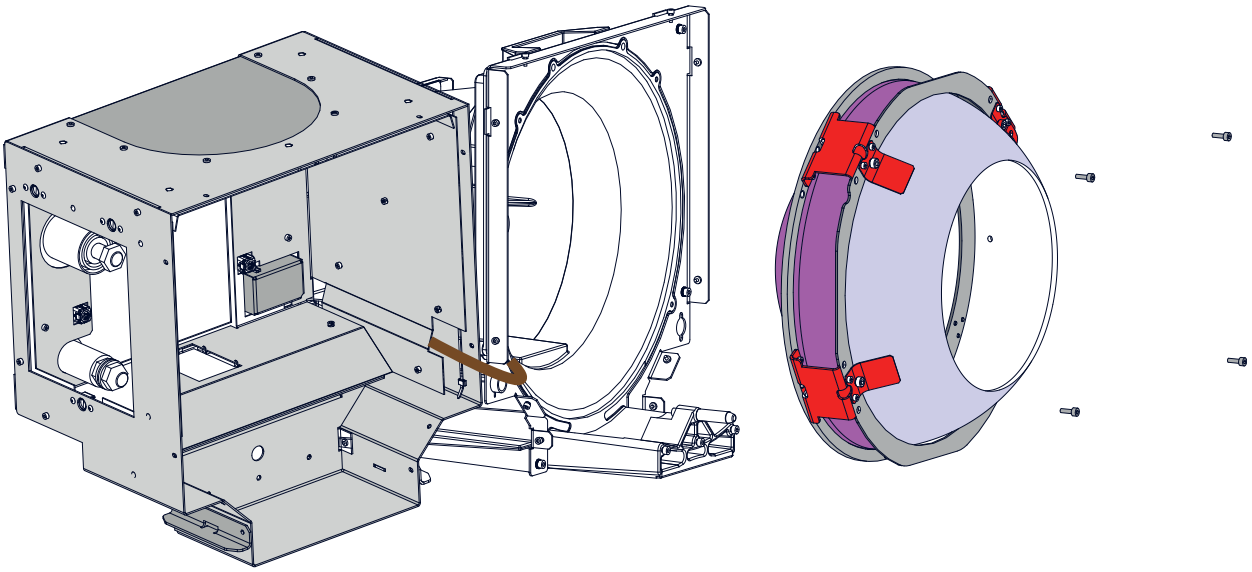

Image 6–127 Remove reflector assembly

6. Place a new Reflector assembly in the Lamp House and fasten with 4 hexagon head cap screws. Use a 3 mm Allen wrench to fasten the screws (reference 6 Image 6–126).

   *Caution:* Do not touch the glass of the Reflector assembly. Hold the Reflector assembly by its metal mounting ring.

7. Reinstall the front assembly of the Lamp House. Use a 2,5 mm Allen wrench to fasten the 13 hexagon head cap screws (reference 1 Image 6–124).

   *Caution:* Take care that the wire unit (reference 3 Image 6–125) of the Lamp Info module does not get jammed.

8. Reconnect the cathode wire with the Lamp House. Make sure to place a plane washer (reference 6 and 7 Image 6–128) between the nuts and the wire lug (reference 3 Image 6–128). Use a torque of **25 Nm** (18,4 lbf*ft) to fasten the nuts (reference 4 and 5 Image 6–128). Block the first nut (reference 4 Image 6–128) with a 22 mm open-end wrench while applying a torque of 25 Nm on the second nut (reference 5 Image 6–128) with a torque wrench.

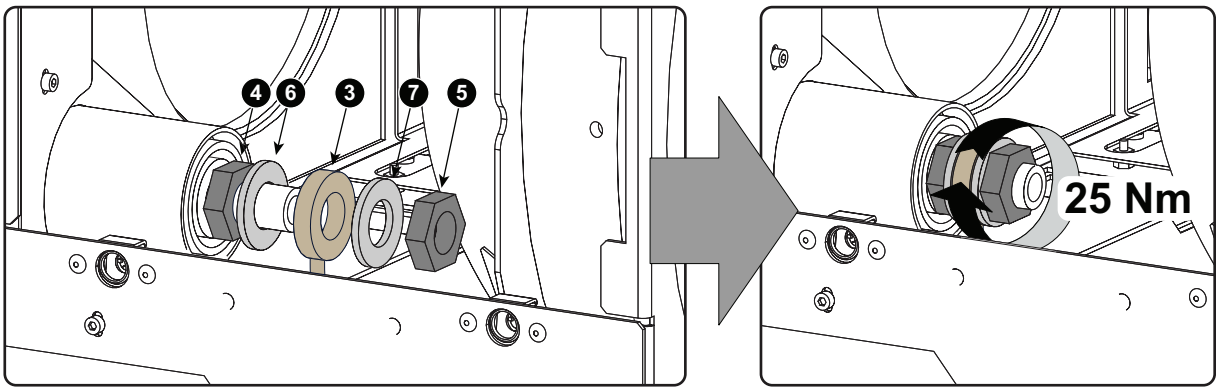


Image 6–128

# 6.19 Realignment of the lamp in its reflector (manual Lamp House)

Each xenon lamp installation requires a realignment of the lamp in its reflector for optimal performance of the xenon lamp in the DP2K and DP4K B series. Furthermore, it is recommended to realign the lamp after the first run time of 100 and 200 hours. Especially the Z-axis of the lamp.

## How to realign

1. Remove the lamp cover to get access to the X-, Y- and Z-axis adjustment thumbscrews of the lamp.
2. Some lamp houses may have lock nuts on the X and Y adjustment screws which are locked. Before starting the adjustment, fully turn these lock nuts against the thumbscrew.

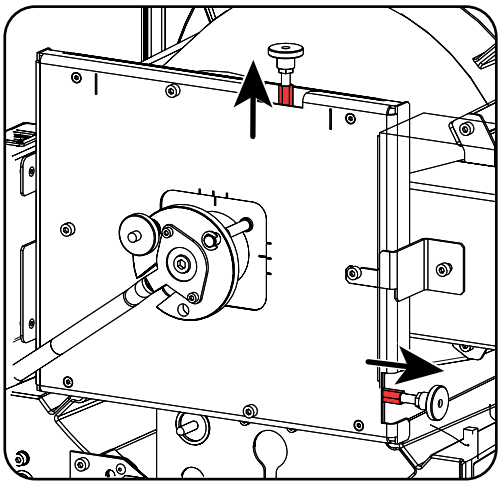

Image 6–129 Lock nuts

3. Switch on the projector and start up the lamp.
4. Go via the Communicator touch panel to the menu **“Installation”** > **“Lamp”** > **“Light output”**.
5. Set the “**Light output mode**” in **normal mode** and the “**Lamp Dimming**” on maximum (**255**).

   *Note:* This window on the Communicator touch panel shows in the upper left corner the measured value of the built-in light sensor of the projector.

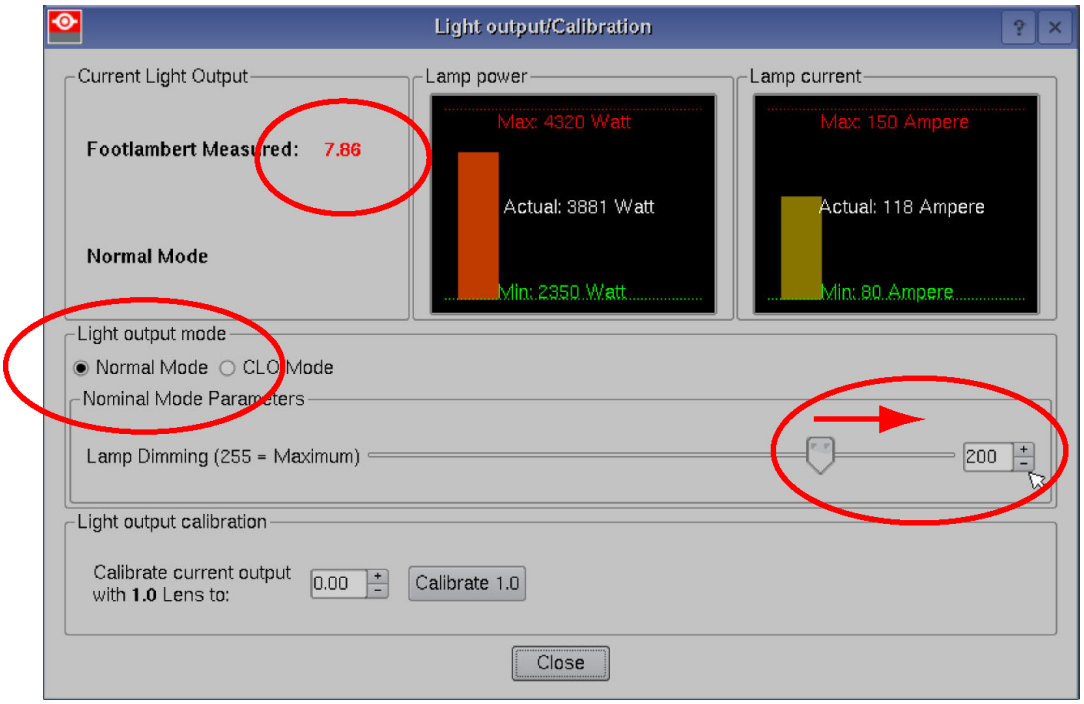


Image 6–130 Light mode selection

6. Adjust the X-axis (ref X Image 6–131), the Y-axis (ref Y Image 6–131) and the Z-axis (ref Z Image 6–131) for maximum current light output (Footlambert Measured). Carefully turn the thumbscrew for maximum light output. Once over the maximum, turn slightly in opposite direction to reach the maximum light output again. Do this for each direction and repeat this adjustment cycle twice.

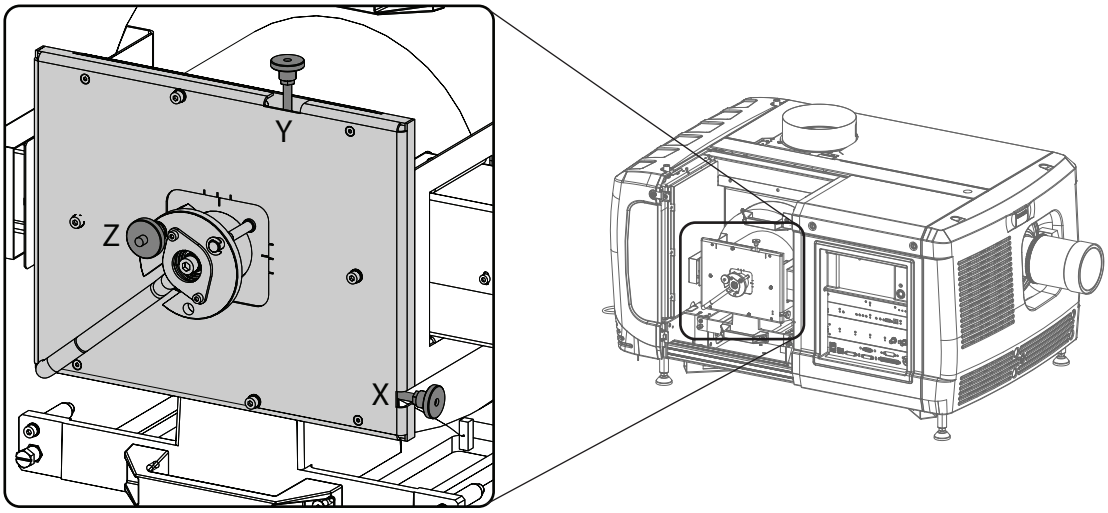


Image 6–131 Realignment points

7. If lock nuts are available, these nuts can be locked again.
8. Switch of the projector.
9. Reinstall the lamp cover.

# 6.20 Replacing a stepper motor of Motorized Lamp House

This procedure assumes that the Motorized Lamp House is already removed from the projector.

## Required tools

- 2mm Allen wrench.
- 3mm Allen wrench.
- T10 Torx screwdriver.

## How to replace a stepper motor of the Motorized Lamp House?

1. Make the bottom side of the Motorized Lamp House accessible by placing the Motorized Lamp House with the Lamp Info module facing upwards upon a flat and clean surface. (Image 6–132)
2. Disconnect the electrical wires (at the bottom side) from the three stepper motors (reference 1, 2 & 3 Image 6–132) and guide the wires through the grommet (reference 4Image 6–132).

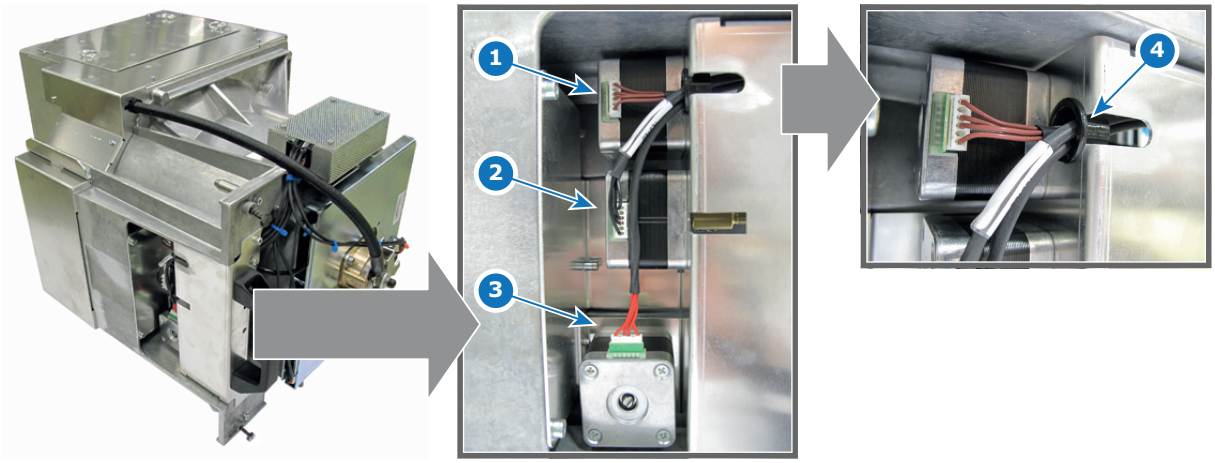


Image 6–132

1 Stepper motor Y motion. (brown wires)
2 Stepper motor X motion. (black wires)
3 Stepper motor Z motion. (red wires)
4 Grommet

3. Turn the thumbscrews of the X and Y adjustment until the fixation screws (reference 5 Image 6–133) of the X and Y flex cables are visible through the holes in the sheet metal at the bottom of the Motorized Lamp House.

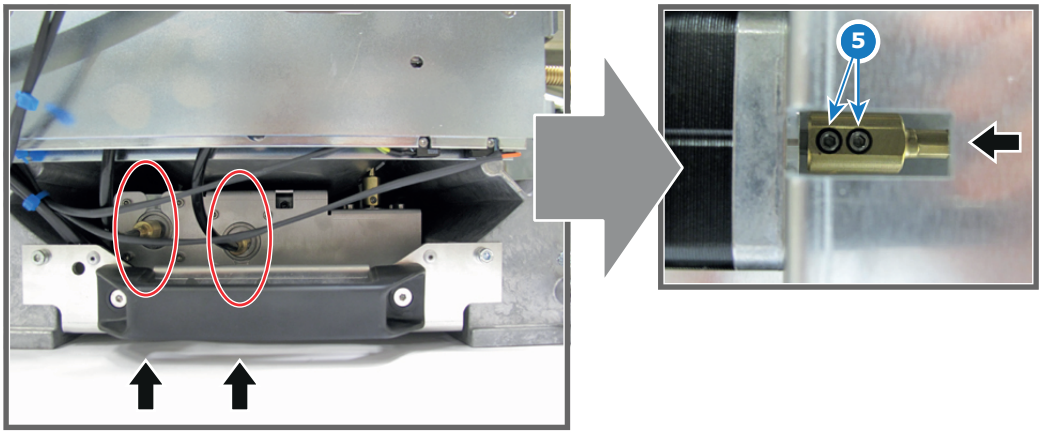


Image 6–133

4. Disconnect the flex cables of the X and Y adjustment from the stepper motors. Use a 2mm Allen wrench the loosen the two set screws of each flex cable. (Image 6–133)

5. Disconnect the flex cable of the Z adjustment. Use a 2mm Allen wrench the loosen the two set screws (reference 5 Image 6–134) of the flex cable.

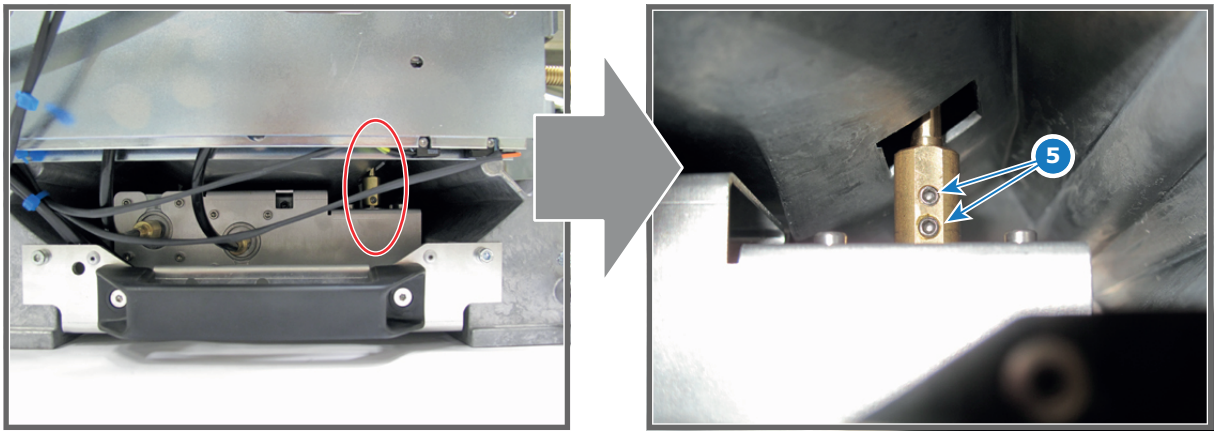


Image 6–134

6. Remove the stepper motor assembly from the base of the Motorized Lamp House. Use a 3mm Allen wrench to loosen the four screws (reference 1 Image 6–135).

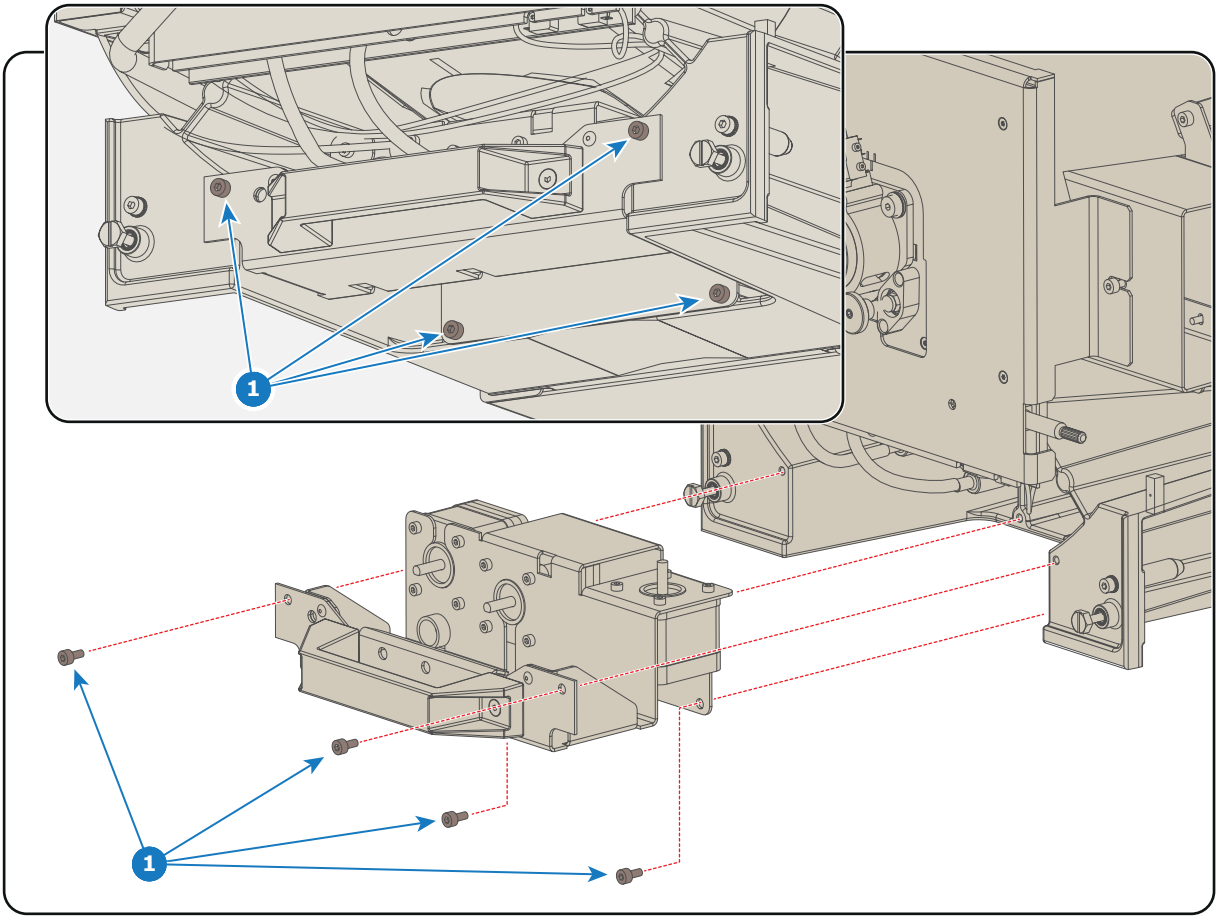


Image 6–135

7. Replace the defect stepper motor with a new one. Use a T10 Torx screwdriver to loosen/fasten the four screws (reference 4 Image 6–136) of the stepper motor.
   - Reference 1 Image 6–136: Stepper motor for Y motion.
   - Reference 2 Image 6–136: Stepper motor for X motion.
   - Reference 3Image 6–136: Stepper motor for Z motion.

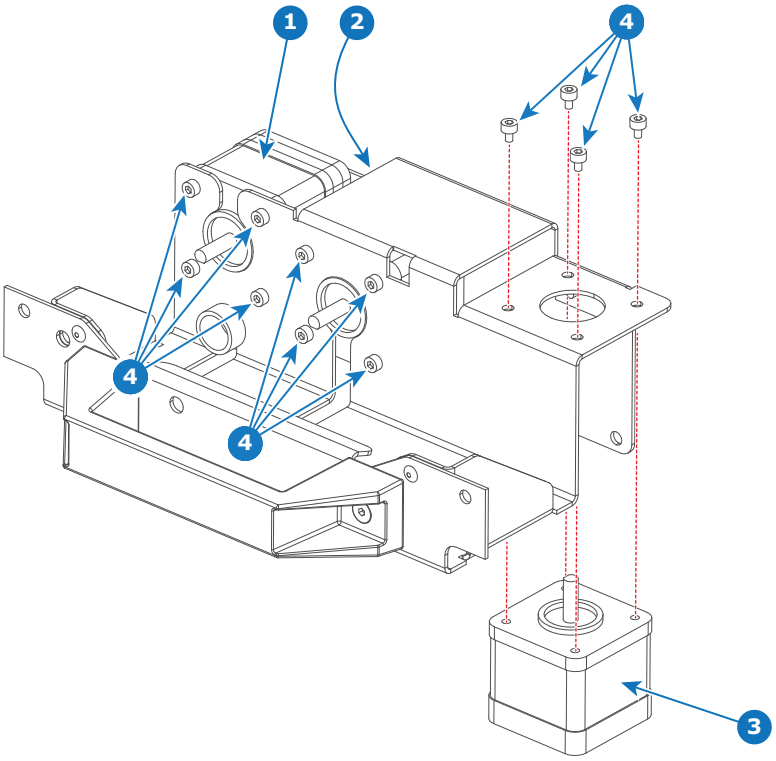


Image 6–136

8. Reinstall the stepper motors assembly. Use a 3mm Allen wrench to fasten the four hexagon socket head cap screws (reference 1 Image 6–135).

   ⚠ *Caution:* Do not damage the electrical wires while installing the stepper motors assembly.

9. Reconnect the three flex cables Image 6–133 and Image 6–134) with their respective stepper motor. Use a 2mm Allen wrench the fasten the two set screws of each flex cable.
   - Reference 1 Image 6–136: Stepper motor for Y motion.
   - Reference 2 Image 6–136: Stepper motor for X motion.
   - Reference 3Image 6–136: Stepper motor for Z motion.

10. Guide the electrical wires through the grommet and connect the wire with the stepper motors.
    - Reference 1 Image 6–132: Brown wires with the stepper motor for Y motion.
    - Reference 2 Image 6–132: Red wires with the stepper motor for X motion.
    - Reference 3Image 6–132: Black wires with the stepper motor for Z motion.

# 6.21 Lubrication of the XYZ mechanism

## How often lubricating the XYZ mechanism?

Barco recommends to lubricate the XYZ mechanism of the Motorized Lamp House every year.

For design reasons it's recommended to use the built-in stepper motors to operate the XYZ mechanism of the Motorized Lamp House instead of using the thumbscrews. See chapter “Manual Lamp Alignment”.

## Required parts

High-temperature and long-term lubricant with an expiry date one year from now.

## How to lubricate the XYZ mechanism of the Motorized Lamp House?

1. Place the adjustment mechanism in nominal position. Its recommended to use the stepper motors for the X and Y adjustment until the indicators (reference 1 Image 6–137) match with the centre as illustrated.
2. Lubricate the adjustment mechanism at the points 2, 3 and 4 (see image Image 6–137 ).
3. Place the adjustment mechanism in the upper right position. Its recommended to use the stepper motors for the X and Y adjustment instead of the thumbscrews.
4. Lubricate the screw thread of the thumbscrews for X and Y adjustment (reference 5 and 6 Image 6–137 ).
5. Place the adjustment mechanism in the lower left position. This to ensure that the rods are completely lubricated.
6. Reposition the adjustment mechanism in the centre.

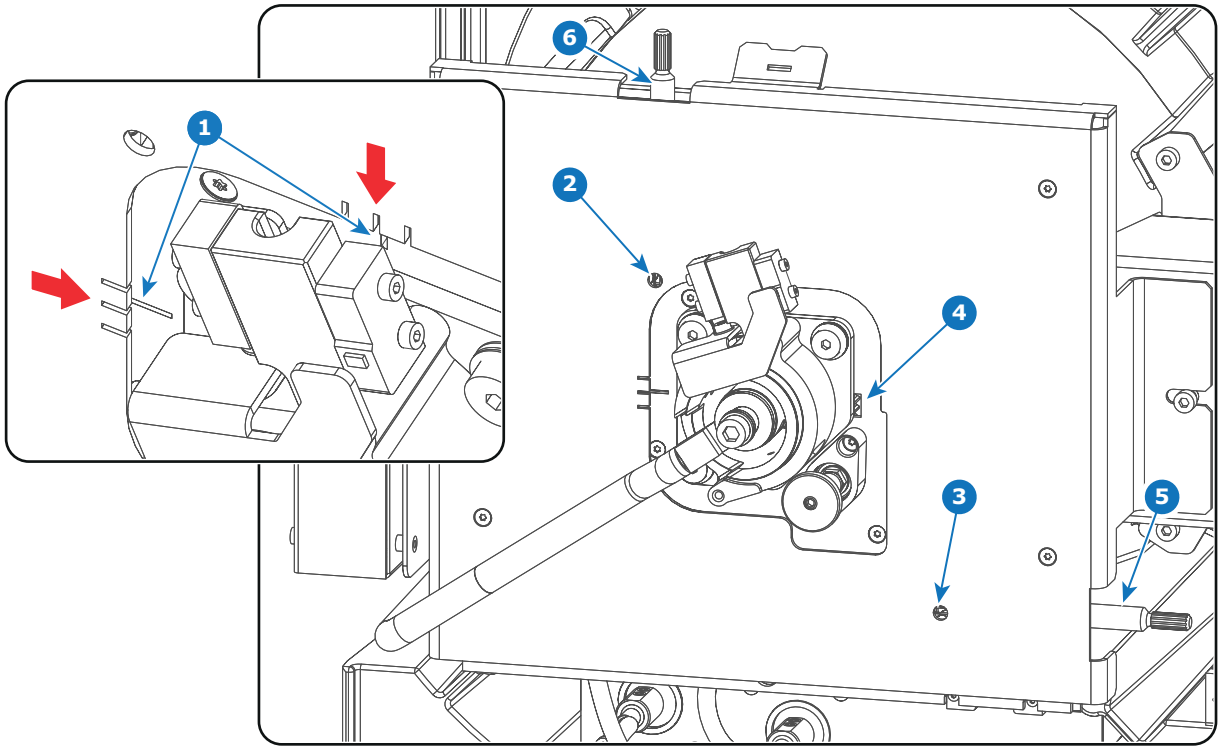


Image 6–137

A realignment of the xenon lamp is required after lubricating the XYZ mechanism of the Motorized Lamp House.

# 6.22 Cleaning the UV blocker of the Lamp House

## When cleaning the UV blocker?

Clean UV blocker on regular basis to maintain light output level.

This procedure requires that the UV blocker is removed from the Lamp House.

## Required tools

- Compressed air.
- Clean Toraysee® cloth or any micro fiber lens cleaning cloth.
- Clean cotton cloth.

## Required parts

Lens cleaner (e.g. Carl Zeiss lens cleaner or Purasol® or any waterbased lens cleaner)

## How to clean the UV blocker of the Lamp House?

1. Blow off dust with clean compressed air (or pressurized air cans).
2. Clean with lens cleaner together with a clean lens cleaning cloth to remove the dust and contamination. Use big wipes.
3. Use a dry lens cleaning cloth to remove left liquid or stripes. Polish with small circles.
4. If there are still fingerprints on the surface, wipe them off with lens cleaner together with a clean lens cleaning cloth. Polish again with a dry one.

**CAUTION:** Never reinstall a UV blocker which is cracked or has a damaged coating. Neglecting this will result in irreversible damage of optical parts in the projector.

# 6.23 Cleaning the Reflector of the Lamp House

## When cleaning the Reflector?

Clean the Reflector on a regular basis to maintain light output level.



This procedure requires that the lamp is removed from the Lamp House.

## Required tools

- Compressed air.
- Clean Toraysee® cloth or any micro fiber lens cleaning cloth.
- Clean cotton cloth.

## Required parts

Lens cleaner (e.g. Carl Zeiss lens cleaner or Purasol® or any waterbased lens cleaner)

## How to clean the Reflector of the Lamp House?

1. Blow off dust with clean compressed air (or pressurized air cans).
2. Clean with lens cleaner together with a clean lens cleaning cloth to remove the dust and contamination. Use big wipes.
3. Use a dry lens cleaning cloth to remove left liquid or stripes. Polish with small circles.
4. If there are still fingerprints on the surface, wipe them off with lens cleaner together with a clean lens cleaning cloth. Polish again with a dry one.



**CAUTION:** Never use a Lamp House with cracked or damaged Reflector. Neglecting this may result in irreversible damage of the projector.

# Lamps and Lamp House (motorized track2)

# 7


7.1 Introduction ..... 153
7.2 Removal of the Lamp House ..... 156
7.3 Removal of the xenon lamp from motorized S/M Lamp House ..... 157
7.4 Removal of the xenon lamp from motorized XL Lamp House ..... 161
7.5 Installation of the xenon lamp in motorized S/M Lamp House ..... 166
7.6 Installation of the xenon lamp in motorized XL Lamp House ..... 171
7.7 Installation of the Lamp House ..... 177
7.8 Resetting the lamp parameters & lamp alignment ..... 179
7.9 Replacement of the Lamp Info module ..... 180
7.10 Replacement of the UV blocker ..... 182
7.11 Replacement of the Lamp Reflector ..... 186
7.12 Lubrication of the XYZ mechanism ..... 190
7.13 Replacing a stepper motor ..... 192
7.14 Cleaning the UV blocker and the reflector ..... 195


## About this chapter

This chapter enumerates all the supported xenon lamps for the DP2K and DP4K B series and how to replace the xenon lamp in the Lamp House. Also included are the procedure to reset the lamp parameters, which is required after a xenon lamp replacement, and the procedure to realign the lamp in its reflector for optimal performance.

Also included in this chapter are the replacement procedures for the UV blocker, Lamp Reflector and the Lamp Info module.



**WARNING:** DO NOT PERMIT UNAUTHORIZED PERSONNEL TO PERFORM OR ATTEMPT ANY PHASE OF XENON LAMP HANDLING OR SERVICE. ONLY TRAINED AND QUALIFIED TECHNICAL SERVICE PERSONNEL ARE ALLOWED TO HANDLE THE XENON LAMP.



**CAUTION:** Xenon compact arc lamps are highly pressurized. When ignited, the normal operating temperature of the bulb increases the pressure to a level at which the bulb may explode if not handled in strict accordance to the manufacturer's instructions. The bulb is stable at room temperature, but may still explode if dropped or otherwise mishandled. Whenever the lamp house, containing a xenon lamp, has to be dismantled or whenever the protective container or cloth has to be removed from the xenon lamp, authorized protective clothing MUST be worn!



**WARNING:** Always wear face protection (full face shield) when handling xenon lamps.



**WARNING:** Always wear protective clothing (welder's jacket) when handling xenon lamps.



**WARNING:** Always wear clean leather gloves with wrist protectors when handling xenon lamps.

## About the where used of lamp houses

**S/M Lamp House** are used in DP2K-19B, DP2K-23B, DP4K-19B, DP4K-23B, DP2K-P and DP4K-P projectors

**XL Lamp House** are used in DP2K-32B and DP4K-32B projectors

# 7.1 Introduction

## Lamp and Lamp House

Xenon lamps are highly pressurized. At room temperature the pressure inside the bulb is between 10 and 15 bar. When ignited, the normal operating temperature of the bulb increases the pressure up to somewhere between 30 and 50 bar. The bulb temperature of an ignited lamp is approximately 700°C and the temperature of the arc is approximately 12000°C! To ignite a xenon lamp a voltage of 40000 volt is required. Once the lamp is ignited the startup voltage drops to a level between 20 and 42 volt. The DC current consumed by the lamp during normal operation can increase to 170 ampere. The maximum light produced by the xenon lamp inside the DP2K and DP4K-32B projector is roughly 250000 lumens.

The xenon lamp is safely sheltered inside the Lamp House. The Lamp House exist in a reflector, a UV blocker, a lamp anode socket, a lamp cathode socket, a Lamp Info module, and a manual or motorized XYZ-adjustment mechanism to align the lamp in the reflector. The Lamp House can handle xenon lamps up to 7000 Watt. The xenon lamp and Lamp House can be removed from the projector as a whole, which allows a fast lamp replacement in cases when time is critical.

The Motorized Lamp House has a motorized XYZ-adjustment mechanism. This feature combined with the built-in Light Sensor of the projector allows for an automated adjustment of the lamp position for maximum light output of the projector.

The Lamp Info module holds the lamp parameters and keeps track of the lamp history such as lamp power, number of strikes, total lamp run time, etc. For that it is important to reset the lamp parameters after each lamp replacement.

## Parts identification xenon lamp

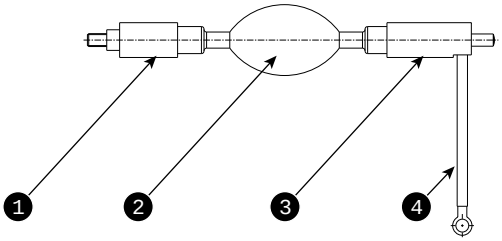


Image 7–1

1 Cathode of the xenon lamp.
2 Envelope (bulb) of the xenon lamp.
3 Anode of the xenon lamp.
4 Anode wire of the xenon lamp.

## Parts identification Motorized Lamp House

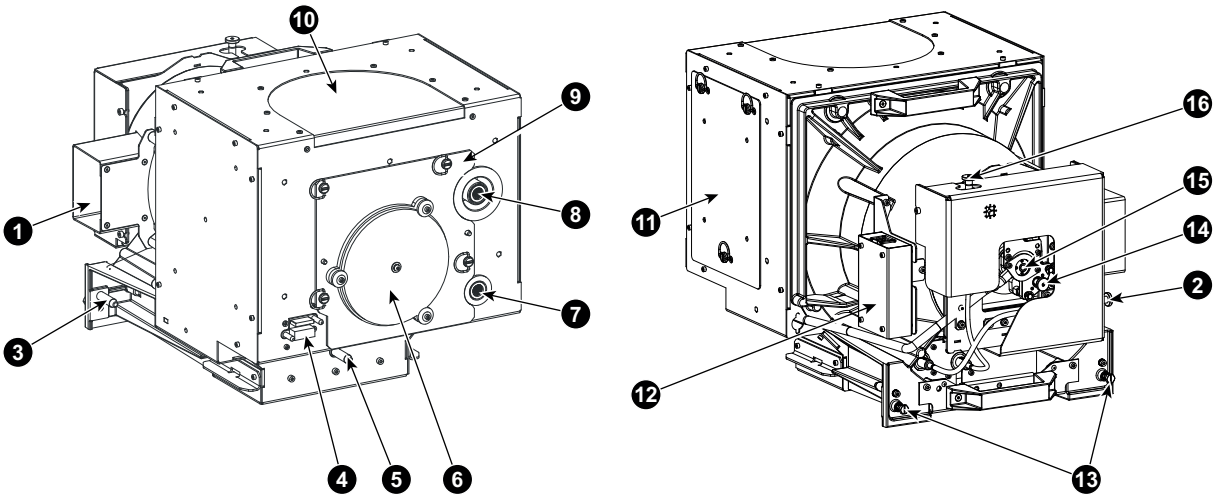


Image 7–2

1 Air inlet cathode cooling.
2 Adjustment screw horizontal lamp alignment.
3 Positioning pin.
4 Connection Lamp Info module.
5 Positioning pin.
6 UV blocker.
7 Cathode connection with SPG.
8 Anode connection with SPG.
9 Removable front cover.
10 Air out let.
11 Removable side cover.
12 Lamp Info module.
13 Lamp House fixation screw.
14 Adjustment screw for lamp Z-alignment.
15 Lamp cathode wire fixation screw.
16 Adjustment screw vertical lamp alignment.

## S/M Lamp House versus XL Lamp House for DP2K and DP4K B series

There exist two Lamp Houses for the DP2K and DP4K B series projectors. One **S/M Lamp House** for small and medium lamps sizes and one **XL Lamp House** for large lamp sizes.

Externally both Lamp Houses looks the same but inside the XL Lamp House houses a physical bigger xenon lamp which requires a bigger **Reflector** inside the Lamp House. The S/M Lamp House has a smaller Reflector inside and contains an **adaptation piece** on the inner anode connection pin. Furthermore, the integrated **anode support** on the UV Blocker is shorter and contains a spring for the XL Lamp House.

Both Lamp Houses fit in all DP2K and DP4K B series projectors. However, not all lamps are supported by all DP2K and DP4K B series projector. For that it is important to check with the Communicator software which lamps are supported per projector type.

Take into account that both Lamp Houses uses different anode and cathode adaptors.

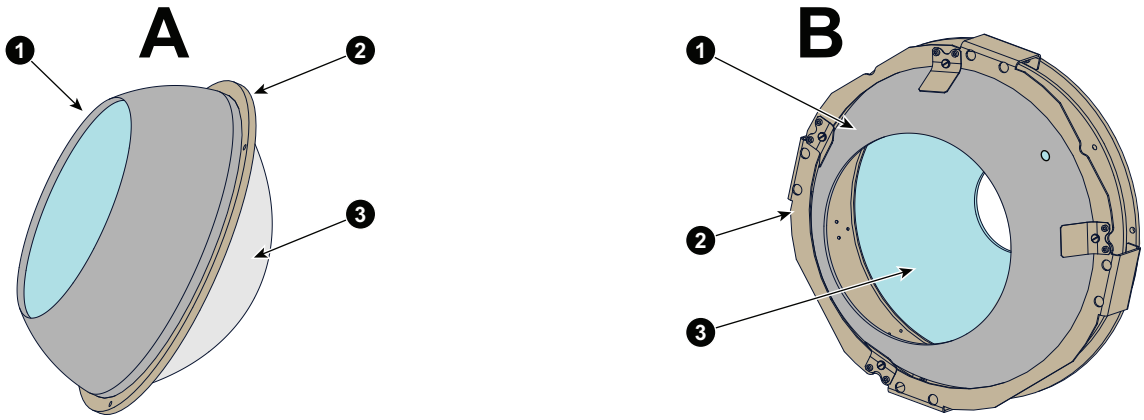


Image 7–3

A1 Spheric glass mirror S/M Lamp House
A2 Metal mounting ring S/M Lamp House
A3 Elliptic glass mirror S/M Lamp House
B1 Spheric glass mirror XL Lamp House
B2 Metal mounting ring XL Lamp House
B3 Elliptic glass mirror XL Lamp House

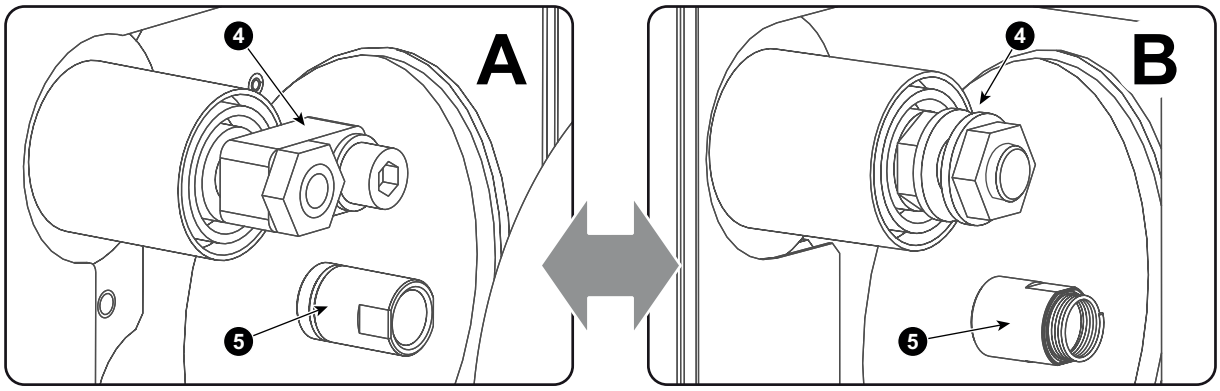


Image 7–4

A4 Anode connection S/M Lamp House
A5 Anode support (long) S/M Lamp House
B4 Anode connection XL Lamp House
B5 Anode support (short) XL Lamp House (Motorized)

## Supported lamps

Motorized lamp house track2 uses the same lamps as the motorized lamp house track1. For an overview of the supported lamps and adapters, see chapters “Supported xenon lamps for the XL Lamp House”, page 75, and “Supported xenon lamps for the S/M Lamp House”, page 77.

## Protective packaging

The xenon lamp is packed in a protective container or wrapped in a protective cloth. Never remove this protective container or protective cloth without wearing adequate protective clothing (face shield, clean cotton glovers, welder's jacket).

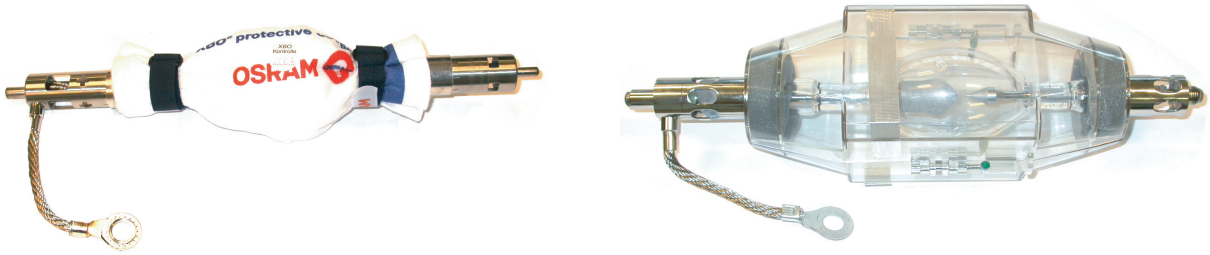


Image 7–5 Left: Xenon lamp wrapped in protective cloth. Right: Xenon lamp packed in protective container.

## Lamp strike policy and lamp warning/error policy versus the lamp runtime

- The projector issues a lamp run time notification message (end have blue status LEDs) approximately 30 hours before the maximum lamp runtime occurs.
- The projector issues a lamp run time notification message (end have blue status LEDs) when the maximum lamp runtime occurs.
- The projector will always try to strike the lamp, independent of the lamp runtime.

# 7.2 Removal of the Lamp House

**WARNING:** This procedure may only be performed by qualified technical service personnel.

**WARNING:** The Lamp House is very hot after operation. To avoid burns, let the projector cool down for at least 15 minutes before proceeding to remove the Lamp House.

**CAUTION:** Due to its high internal pressure, the lamp may explode in either hot or cold states if improperly handled.

## Required tools

10mm nut driver or flat screw driver.

## How to remove the Lamp House

1. Make sure the projector is switched off and cooled down.
2. Remove the cover of the Lamp House compartment.
3. Release the two retaining screws (reference 1 Image 7–6) at the base of the Lamp House. Use a 10mm nut driver or a flat screw driver.
4. Remove the Lamp House as follows:
   1. Grip the Lamp House by the bottom handle and partially slide it out of the lamp compartment
   2. Grip the Lamp House by both handles and remove it completely from the projector.
   3. Place the Lamp House on a stable support.

   *Caution:* Be aware of the weight of the lamp assembly. Take the necessary precautions to avoid personal injury.

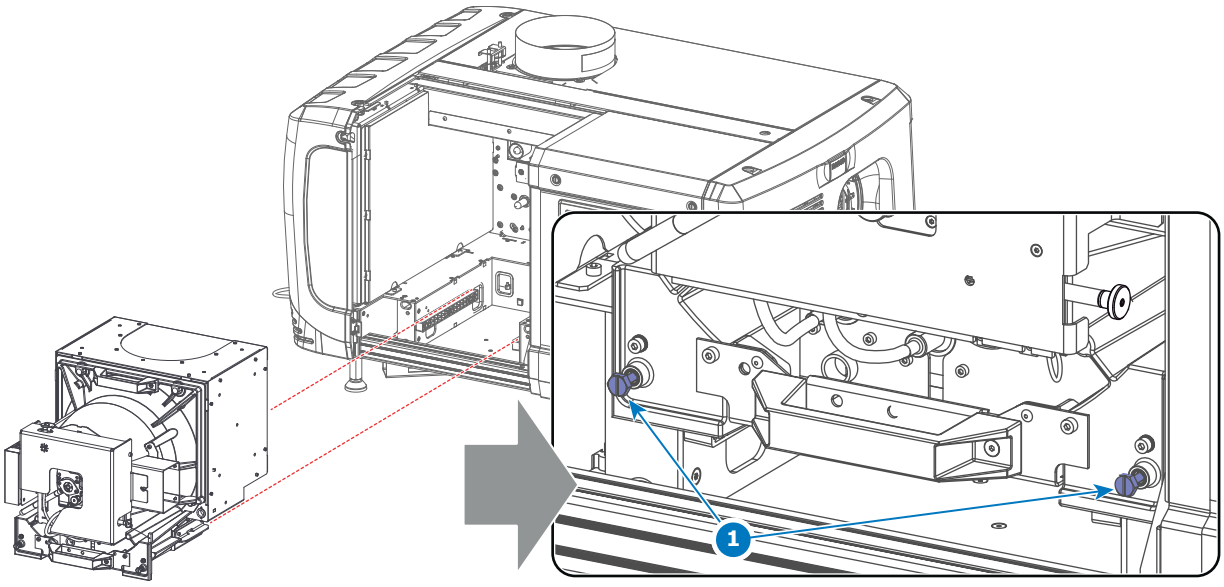


Image 7–6 Remove lamp house

This procedure is illustrated with a Motorized Lamp House. Nevertheless, the instructions are also applicable for the manual Lamp House.

# 7.3 Removal of the xenon lamp from motorized S/M Lamp House

**WARNING:** DO NOT PERMIT UNAUTHORIZED PERSONNEL TO PERFORM OR ATTEMPT ANY PHASE OF XENON LAMP HANDLING OR SERVICE. ONLY TRAINED AND QUALIFIED TECHNICAL SERVICE PERSONNEL ARE ALLOWED TO HANDLE THE XENON LAMP.

**WARNING:** This procedure may only be performed by qualified technical service personnel.

**CAUTION:** Xenon compact arc lamps are highly pressurized. When ignited, the normal operating temperature of the bulb increases the pressure to a level at which the bulb may explode if not handled in strict accordance to the manufacturer's instructions. The bulb is stable at room temperature, but may still explode if dropped or otherwise mishandled. Whenever the lamp house, containing a xenon lamp, has to be dismantled or whenever the protective container or cloth has to be removed from the xenon lamp, authorized protective clothing MUST be worn!

**WARNING:** Always wear face protection (full face shield) when handling xenon lamps.

**WARNING:** Always wear protective clothing (welder's jacket) when handling xenon lamps.

**WARNING:** Always wear clean leather gloves with wrist protectors when handling xenon lamps.

## Required tools

- 5mm Allen wrench.
- 8mm Allen wrench.
- Lamp protective container or protective cloth with two binders.
- Flat blade screw driver.

## How to remove the xenon lamp

1. Remove the hexagon socket head cap screw (reference 1 Image 7–7) which fasten the cathode of the xenon lamp. Use a 5mm Allen wrench. Do not release the cathode wire lug. The screw contains a spring washer and a plain washer (reference 2 & 3 Image 7–7).

   *Note:* The cathode wire remains in its position after the screw and two washers are removed.

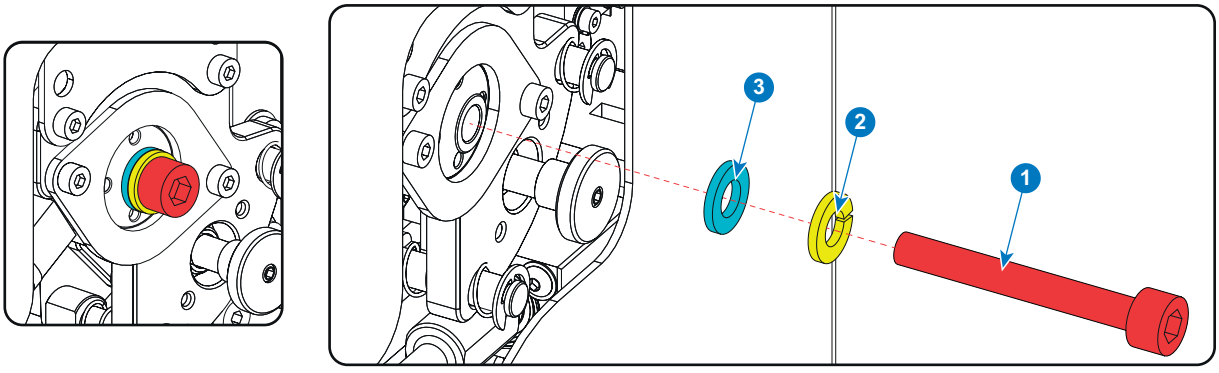


Image 7–7 Cathode screw

2. Remove the side cover of the Lamp House by releasing the three quarter turn screws (reference 4 Image 7–8) of the side cover as illustrated.

*Caution:* Ensure that you wear protective clothing, a full face shield and protective gloves.

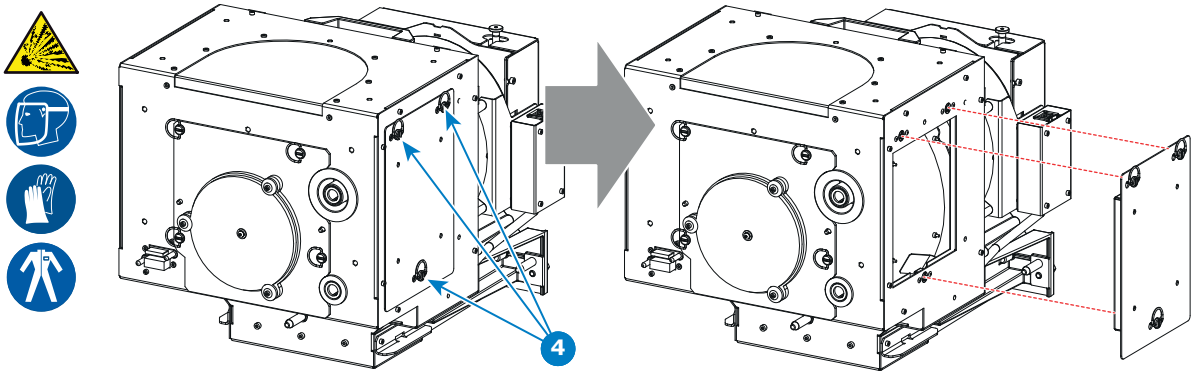


Image 7–8 Lamp house side cover

3. Release the four quarter turn screws (reference 5 Image 7–9) of the UV blocker assembly as illustrated. Make sure that the anode support remains in its position while releasing the screws.

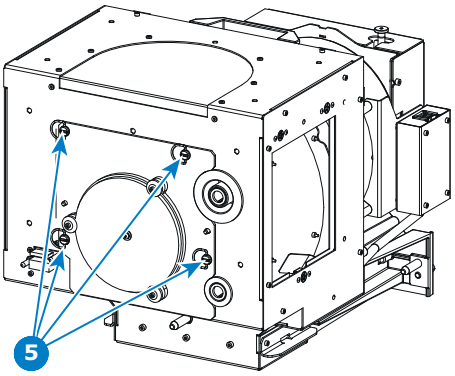


Image 7–9 UV blocker assembly

4. Support the xenon lamp inside the Lamp House with one hand while removing the UV blocker assembly from the lamp house.

*Warning:* Supporting the xenon lamp with one hand prevents the xenon lamp from dropping and colliding with the chassis of the Lamp House.

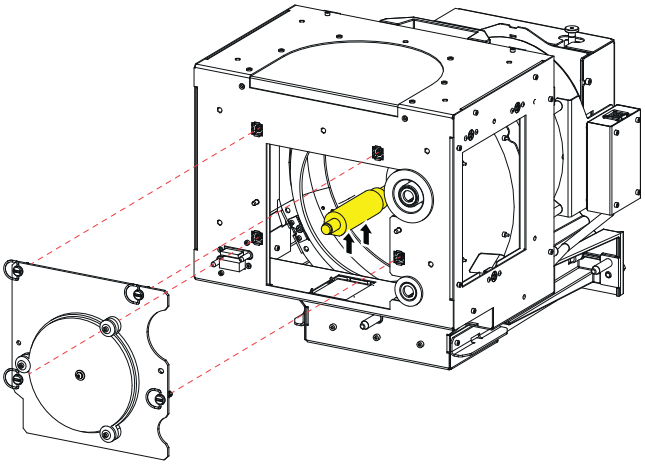

Image 7–10 UV blocker assembly removal

5. Slide out the anode connector from the Lamp House. The anode connector remains attached with the lamp anode wire.

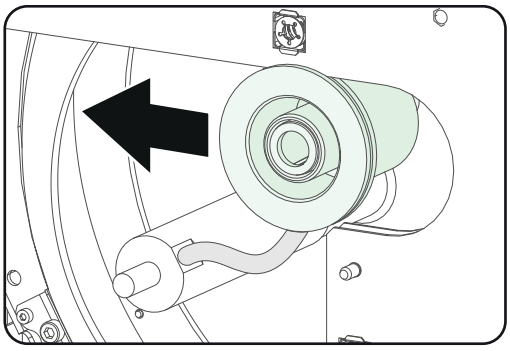

Image 7–11 Anode connector

6. Gently remove the xenon lamp together with the anode socket out of the Lamp House. Do not use excessive force upon the xenon lamp. Normally the xenon lamp will easily slide out the cathode socket of the Lamp House.

   *Warning:* Supporting the xenon lamp with one hand while pulling it out with other hand prevents it from bumping against the chassis of the Lamp House.

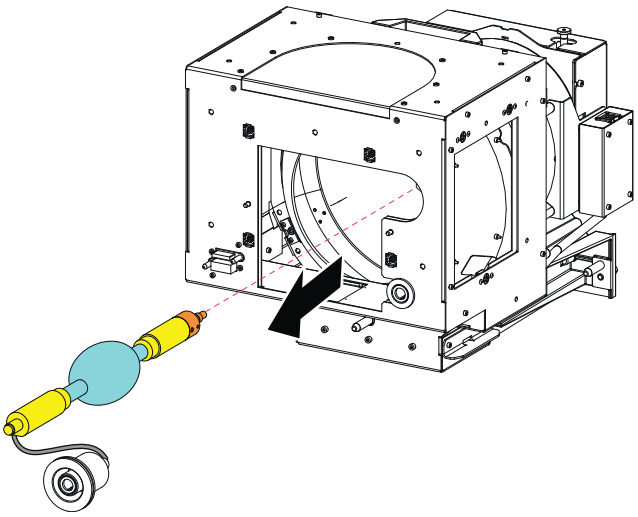

Image 7–12 Lamp out

7. Place the xenon lamp in its protective container or wrap the xenon lamp in a protective cloth and secure with two binders.

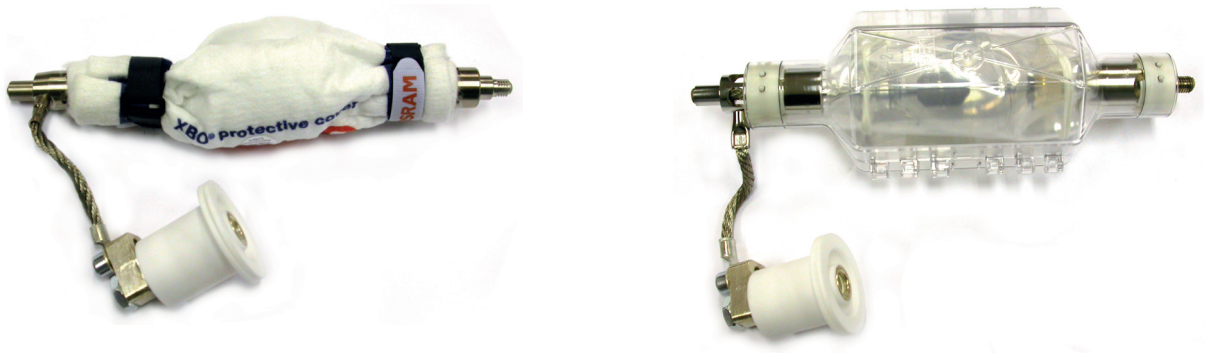

Image 7–13 Left: Xenon lamp wrapped in a protective cloth. Right: Xenon lamp captured in a protective container.

8. Remove the anode wire lug (reference 6 Image 7–14) from the anode socket as illustrated. Use a 8mm Allen wrench.

   *Tip:* Place the flat washer and bolt (reference 7 & 8 Image 7–14) back on its place after the lug is removed.

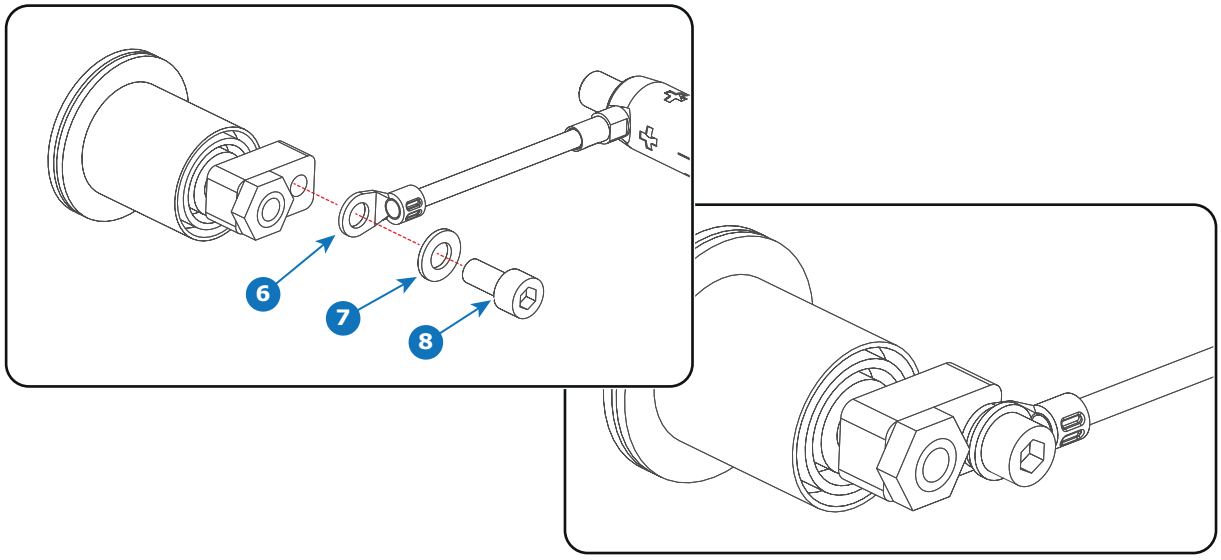


Image 7–14 Anode cable connection

9. Remove the cathode adapter from the xenon lamp by releasing the hexagon socket head cap screw (reference 9 Image 7–15) of the adapter as illustrated. Use a 5mm Allen wrench.

*Note:* Some xenon lamps have a cathode pin with screw threat (reference 10 Image 7–15).

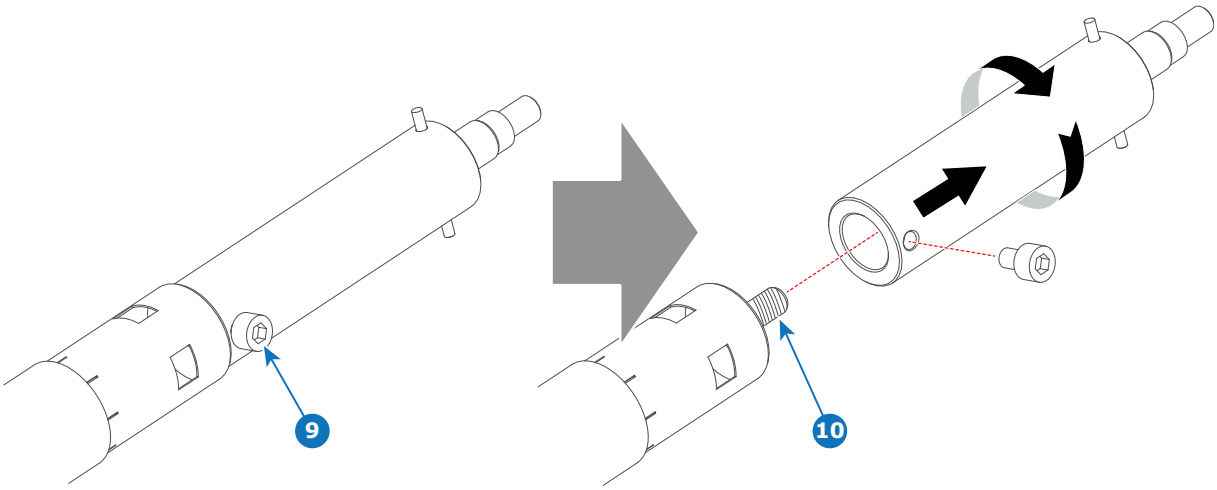


Image 7–15 Cathode adapter

**CAUTION: Expired xenon lamps**.
Dispose of expired bulbs that are beyond warranty according the national regulations. See also related user manual of the lamp supplier for more guidance.

**CAUTION:** Small amounts of radioactive material (< 1000 Bq per lamp) are deliberately added to Xenon lamps for functional reasons. These lamps are manufactured under regulatory control as consumer product according to IAEA basic safety standard BSS 115. Disposal according to national regulations is required e.g. in Europe covered by WEEE regulation. See also related user manual of the lamp supplier for more guidance.

When returning a xenon lamp for warranty adjustment, pack it in its original shipping container. Complete and return all required warranty information.

# 7.4 Removal of the xenon lamp from motorized XL Lamp House

**WARNING:** DO NOT PERMIT UNAUTHORIZED PERSONNEL TO PERFORM OR ATTEMPT ANY PHASE OF XENON LAMP HANDLING OR SERVICE. ONLY TRAINED AND QUALIFIED TECHNICAL SERVICE PERSONNEL ARE ALLOWED TO HANDLE THE XENON LAMP.

**WARNING:** This procedure may only be performed by qualified technical service personnel.

**CAUTION:** Xenon compact arc lamps are highly pressurized. When ignited, the normal operating temperature of the bulb increases the pressure to a level at which the bulb may explode if not handled in strict accordance to the manufacturer's instructions. The bulb is stable at room temperature, but may still explode if dropped or otherwise mishandled. Whenever the lamp house, containing a xenon lamp, has to be dismantled or whenever the protective container or cloth has to be removed from the xenon lamp, authorized protective clothing MUST be worn!

**WARNING:** Always wear face protection (full face shield) when handling xenon lamps.

**WARNING:** Always wear protective clothing (welder's jacket) when handling xenon lamps.

**WARNING:** Always wear clean leather gloves with wrist protectors when handling xenon lamps.

## Required tools

- Two open-end wrenches of 22mm.
- Lamp protective container or protective cloth with two binders.
- Flat blade screw driver.
- 5mm Allen wrench.
- 2,5 mm Allen wrench.

## How to remove the xenon lamp

1. Remove the hexagon socket head cap screw (reference 1 Image 7–16) which fasten the cathode of the xenon lamp. Use a 5mm Allen wrench. Do not release the cathode wire lug. The screw contains a spring washer and a plain washer (reference 2 & 3 Image 7–16).

   *Note:* The cathode wire remains in its position after the screw and two washers are removed.

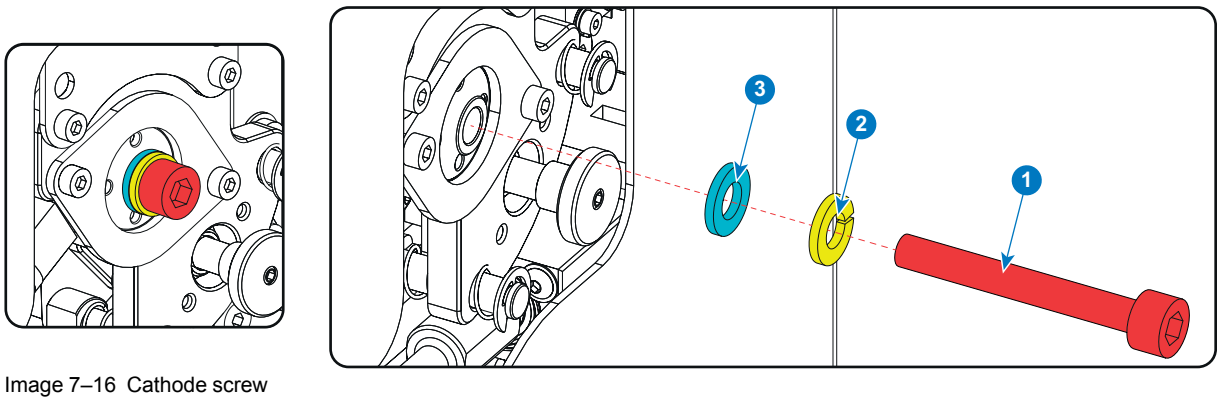


Image 7–16 Cathode screw

2. Remove the side cover of the Lamp House by releasing the three quarter turn screws (reference 4 Image 7–17) of the side cover as illustrated.

*Caution:* Ensure that you wear protective clothing, a full face shield and protective gloves.

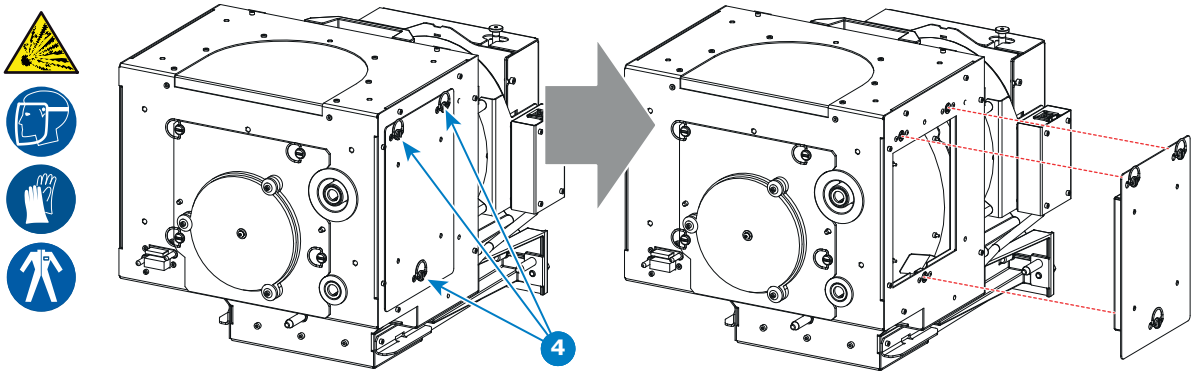


Image 7–17 Lamp house side cover

3. Release the four quarter turn screws (reference 5 Image 7–18) of the UV blocker assembly as illustrated. Make sure that the anode support remains in its position while releasing the screws.

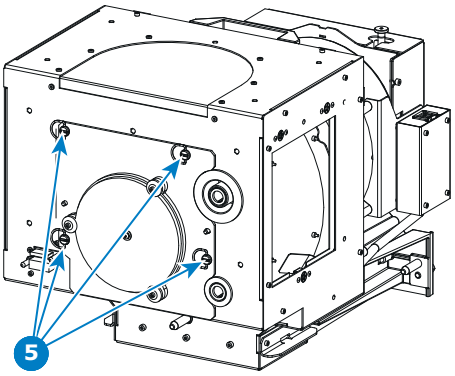


Image 7–18 UV blocker assembly

4. Support the xenon lamp inside the Lamp House with one hand while removing the UV blocker assembly from the lamp house.

*Warning:* Supporting the xenon lamp with one hand prevents the xenon lamp from dropping and colliding with the chassis of the Lamp House.

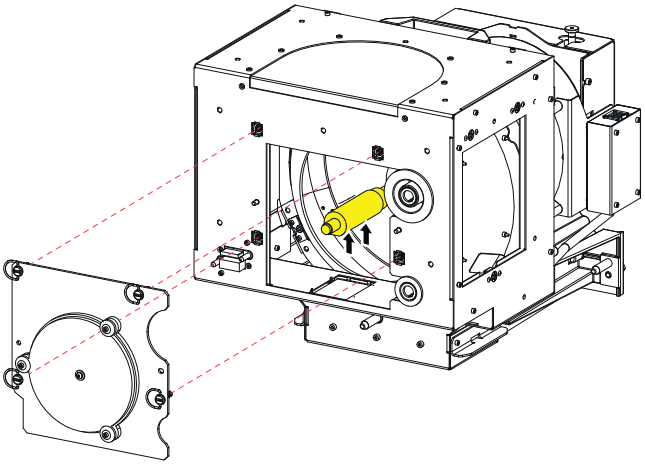

Image 7–19 UV blocker assembly removal

5. Slide out the anode connector from the Lamp House. The anode connector remains attached with the lamp anode wire.

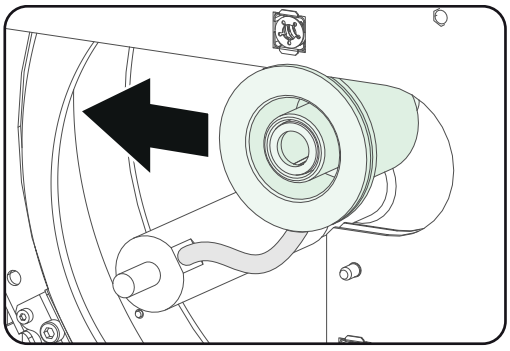

Image 7–20 Anode connector

6. Gently remove the xenon lamp together with the anode socket out of the Lamp House. Do not use excessive force upon the xenon lamp. Normally the xenon lamp will easily slide out the cathode socket of the Lamp House.

   *Warning:* Supporting the xenon lamp with one hand while pulling it out with other hand prevents it from bumping against the chassis of the Lamp House.

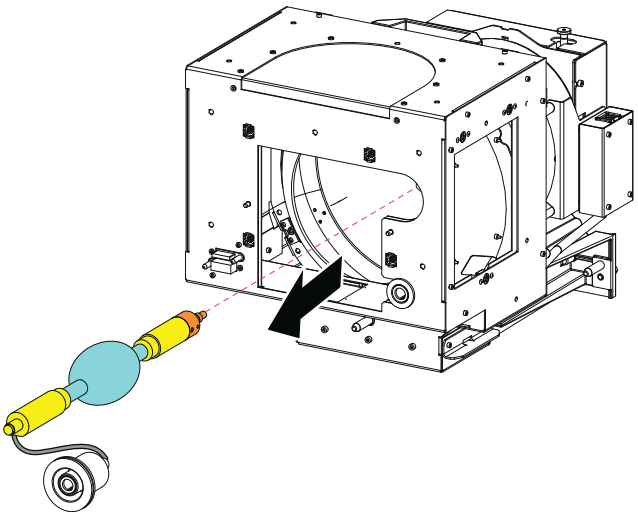

Image 7–21 Lamp out

7. Place the xenon lamp in its protective container or wrap the xenon lamp in a protective cloth and secure with two binders.

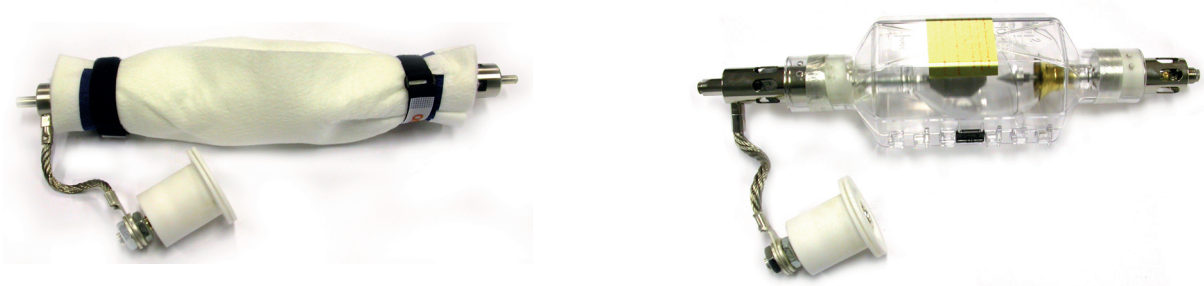

Image 7–22 Left: Xenon lamp wrapped in a protective cloth. Right: Xenon lamp captured in a protective container.

8. Remove the anode wire lug (reference 7 Image 7–22) from the anode socket. Use two open ended spanners of 22 mm. Hold the first nut (reference 5) with one spanner while releasing the second nut (reference 9 Image 7–22) with the other spanner.

   *Tip:* Place the flat washer and the nut back on the rod after the lug is removed.

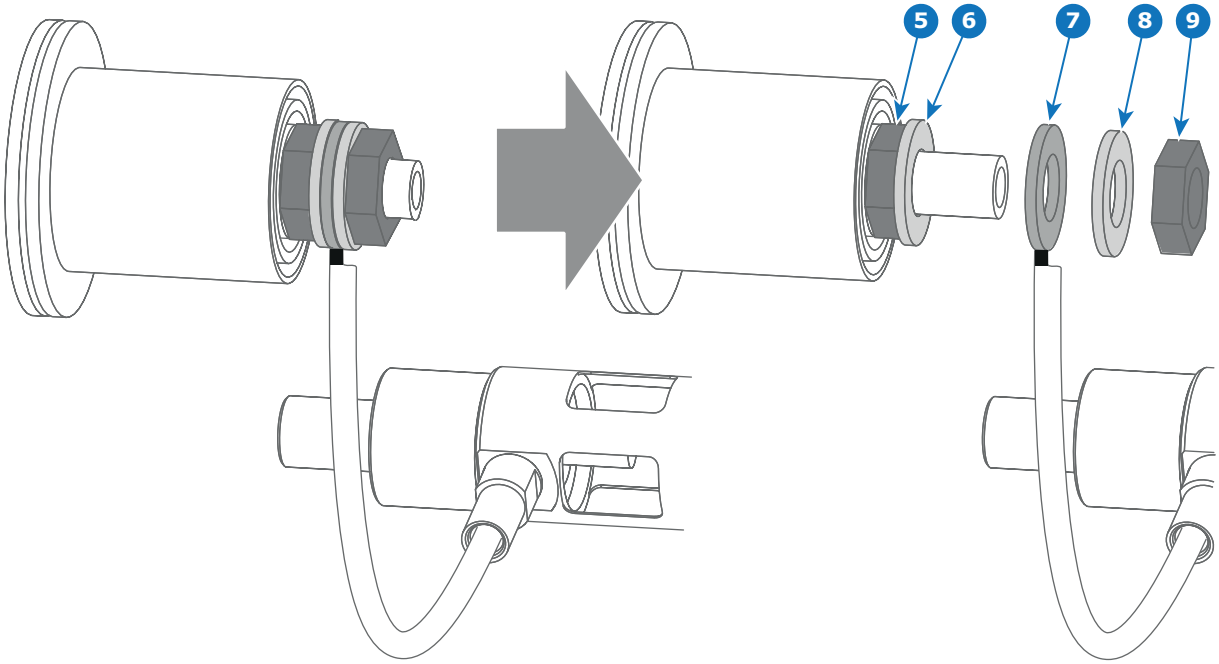


Image 7–23 Anode connection

**9.** Remove the cathode adapter from the xenon lamp by releasing the hexagon socket head set screw (reference 9 Image 7–23) of the adapter as illustrated. Use a 2.5mm Allen wrench.

*Note:* Some xenon lamps have a cathode pin with screw threat (reference 10 Image 7–23.

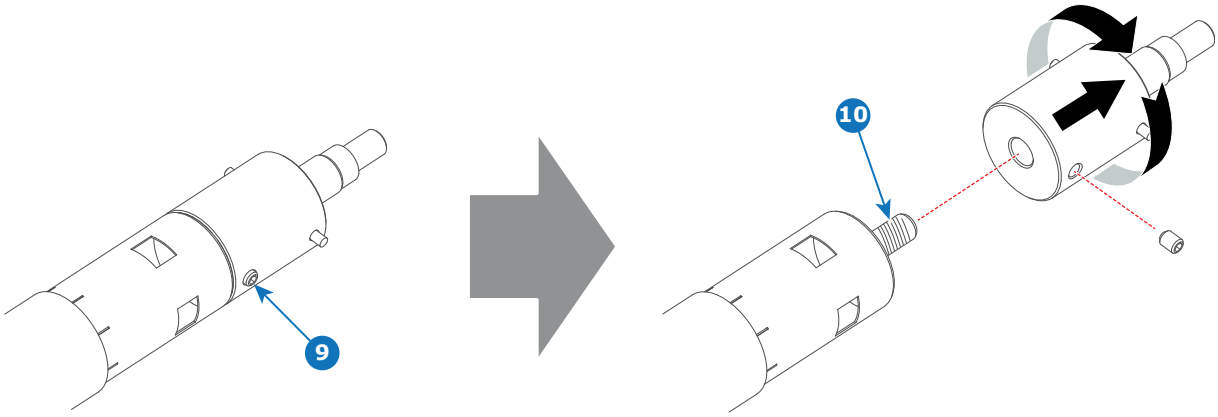


Image 7–24 Cathode adapter

**10.** Remove the anode adapter from the xenon lamp by releasing the hexagon socket head set screw (reference 13 Image 7–25) of the lamp adapter as illustrated. Use a 2.5mm Allen wrench.

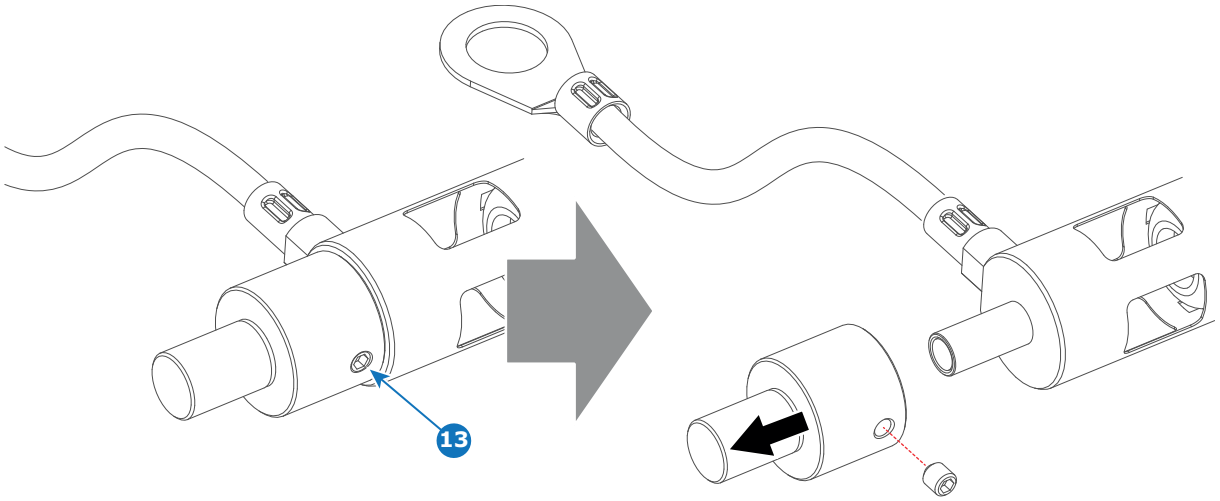


Image 7–25 Anode adapter

**CAUTION: Expired xenon lamps**.
Dispose of expired bulbs that are beyond warranty according the national regulations. See also related user manual of the lamp supplier for more guidance.

**CAUTION:** Small amounts of radioactive material (< 1000 Bq per lamp) are deliberately added to Xenon lamps for functional reasons. These lamps are manufactured under regulatory control as consumer product according to IAEA basic safety standard BSS 115. Disposal according to national regulations is required e.g. in Europe covered by WEEE regulation. See also related user manual of the lamp supplier for more guidance.

Reinstall the UV blocker assembly and the side cover in case you do not intend to install another xenon lamp immediately in the Lamp House.

# 7.5 Installation of the xenon lamp in motorized S/M Lamp House

**WARNING:** DO NOT PERMIT UNAUTHORIZED PERSONNEL TO PERFORM OR ATTEMPT ANY PHASE OF XENON LAMP HANDLING OR SERVICE. ONLY TRAINED AND QUALIFIED TECHNICAL SERVICE PERSONNEL ARE ALLOWED TO HANDLE THE XENON LAMP.

**WARNING:** This procedure may only be performed by qualified technical service personnel.

**CAUTION:** Xenon compact arc lamps are highly pressurized. When ignited, the normal operating temperature of the bulb increases the pressure to a level at which the bulb may explode if not handled in strict accordance to the manufacturer's instructions. The bulb is stable at room temperature, but may still explode if dropped or otherwise mishandled. Whenever the lamp house, containing a xenon lamp, has to be dismantled or whenever the protective container or cloth has to be removed from the xenon lamp, authorized protective clothing MUST be worn!

**WARNING:** Always wear face protection (full face shield) when handling xenon lamps.

**WARNING:** Always wear protective clothing (welder's jacket) when handling xenon lamps.

**WARNING:** Always wear clean leather gloves with wrist protectors when handling xenon lamps.

This procedure assumes that the anode support assembly and the side cover are already removed from the Lamp House due to the removal of the xenon lamp.

## Required tools

- Torque Allen key.
- 22mm open-end wrench.
- Torque wrench with a 22mm hexagon socket.
- Torque wrench with a 8mm Allen socket.
- Torque wrench with a 5mm Allen socket.

## How to install the xenon lamp

1. Install the lamp cathode adapter on the cathode of the xenon lamp. Note that some xenon lamps have a cathode pin with screw threat (reference 10 Image 7–26). Screw the adaptor on the anode pin as far as possible. Make sure that there is full contact between the adapter flat surface and the lamp base. Fasten the set screw (reference 9 Image 7–26) of the cathode adapter with a torque of **2.5Nm** (1.84 lbf*ft). Use a torque wrench with a 5mm Allen socket.

   *Caution:* Ensure that the adaptor is clean. Periodically clean the adapter. Remove oxide from silver plated adaptor with standard household metal polish (E.g. Brasso).

   *Warning:* Install the cathode adapter prior to removing the protective container or protective cloth from the xenon lamp.

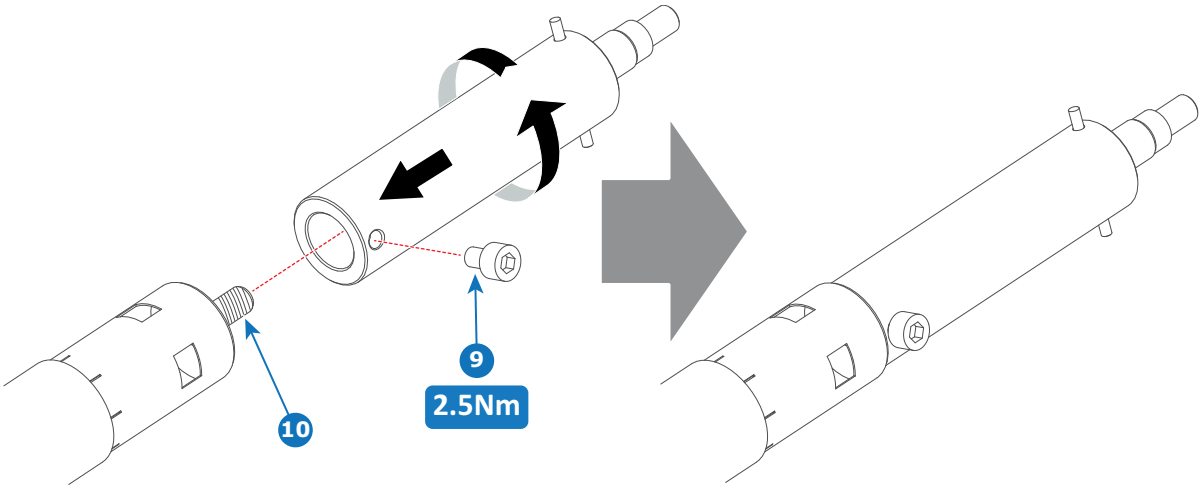


Image 7–26 Cathode adapter

2. Install the anode wire lug (reference 6 Image 7–27) upon the anode socket as illustrated. Use an 8mm Allen torque key set to **9Nm** (6.64lbf*ft) to secure the bolt (reference 8 Image 7–27). Place a flat washer (reference 7 Image 7–27) between the bolt and the wire lug.

*Warning:* Make sure that there is no tension on the anode wire of the xenon lamp.

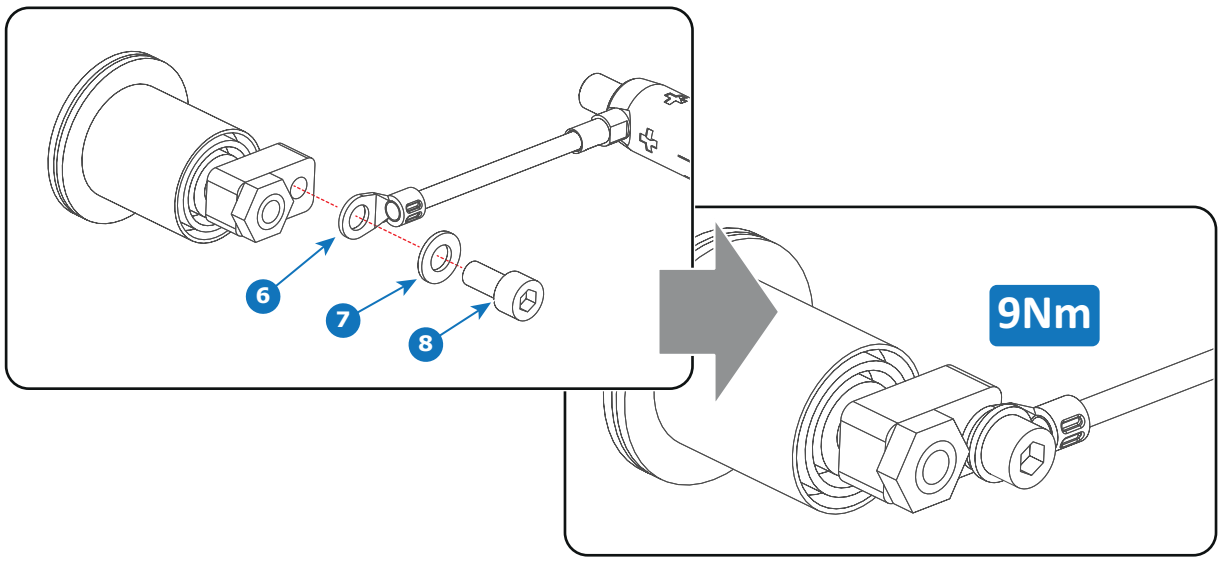


Image 7–27 Anode connection

*Tip:* Write down the serial number of the xenon lamp. You will need this while updating the lamp parameters after installation of the xenon lamp. The serial number of the xenon lamp is engraved in the neck of the xenon lamp.

3. Check the cathode connection inside the lamp house. Use an 22 mm open-end wrench to hold the first nut while fastening the second nut on the rod with a torque of **25Nm** (18.4 lbf*ft) using a torque wrench with 22 mm hexagon socket. Ensure that there is a flat washer at both sides of the wire lug. It's safer to do this check before the xenon lamp is installed to avoid accidental bumping against the xenon lamp.

*Tip:* The cathode socket can easily pulled out from the Lamp House as a whole to perform this check.

*Caution:* These cathode connections must be checked with every lamp change!

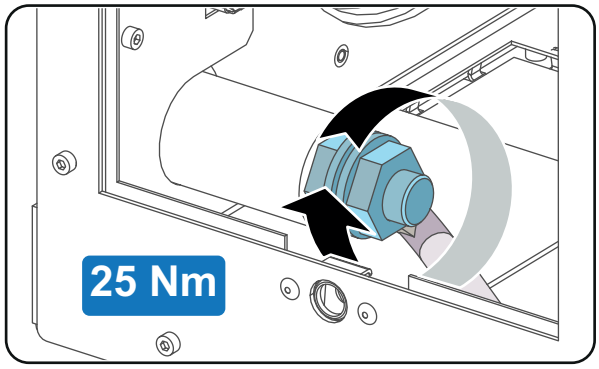


Image 7–28 Cathode connection

4. Remove the protective packing from the xenon lamp and gently insert the xenon lamp into the Lamp House as illustrated. Lamp cathode first, Make sure that the wire of the lamp anode is upwards oriented. While inserting the lamp, rotate it slightly, **engaging the pins** (reference 11 Image 7–29) of the cathode adapter in the foreseen slots. This is to ensure the lamp cathode is completely inserted. Keep supporting the anode of the lamp with one hand once the xenon lamp is in position.

*Caution:* Ensure that you wear protective clothing, a full face shield and protective gloves.

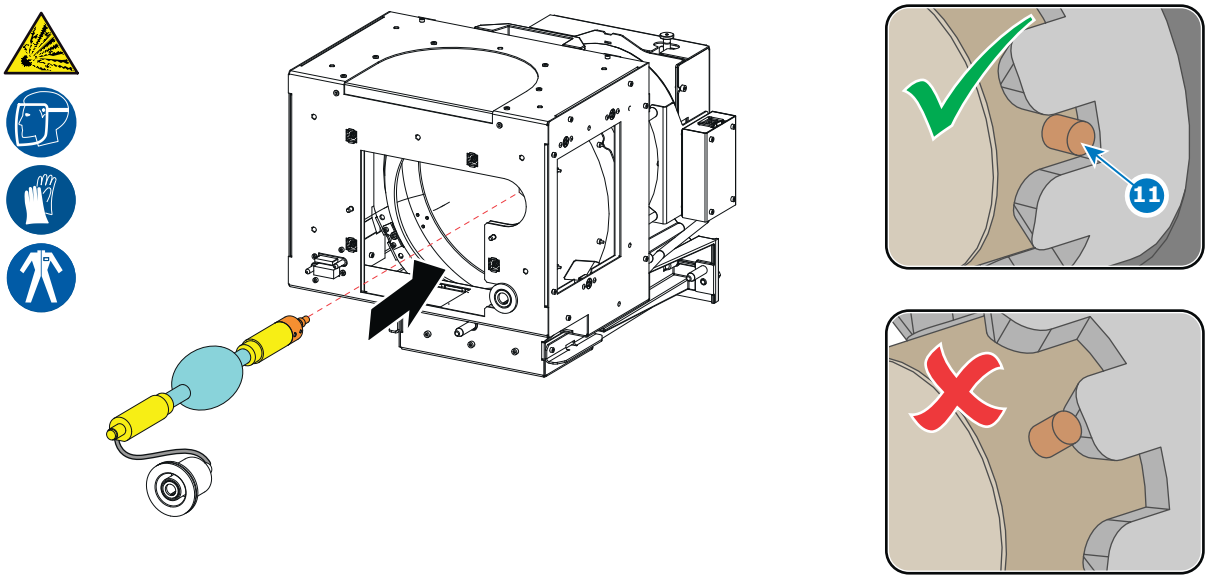


Image 7–29 Mounting lamp

5. Slide the anode connector in its position on the Lamp House as illustrated.

*Caution:* Avoid any tension on the anode wire, ensuring there is no mechanical stress on the lamp.

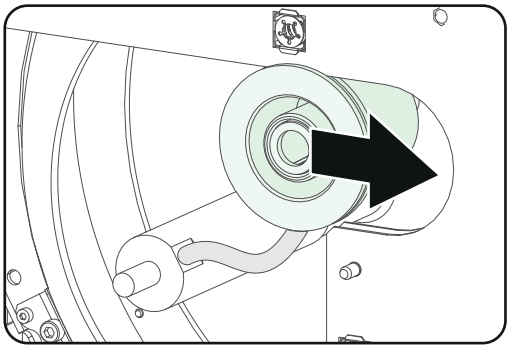

Image 7–30 Mount anode connector

6. Install the UV blocker assembly as illustrated. Use the opening at the side of the Lamp House to guide the anode pin of the xenon lamp into the anode supporting mechanism of the UV blocker.

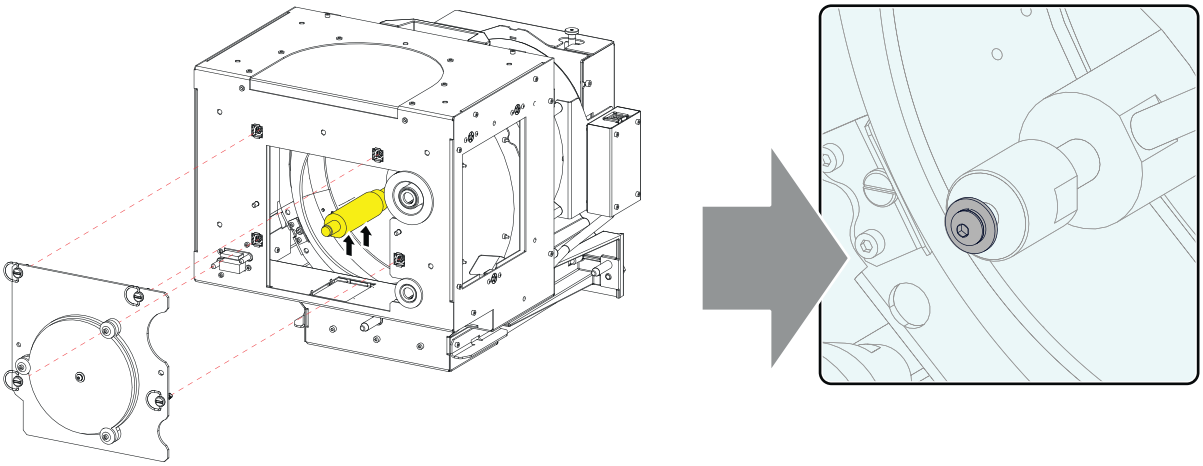

Image 7–31 UV filter assembly, mount

7. Secure the UV blocker by fastening the four quarter turn screws (reference 5 Image 7–32) as illustrated.

   *Note:* Ensure that the quarter turn screws turning wires are flush with the cover or interference will occur while inserting the Lamp House into the projector.

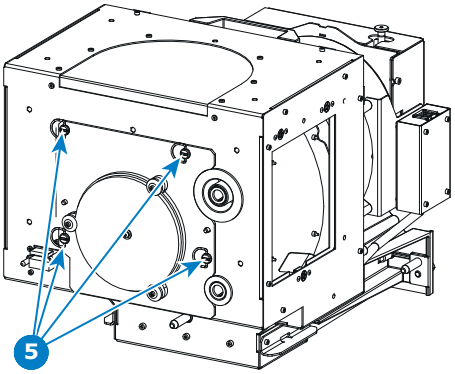


Image 7–32 UV blocker assembly, close

8. Install the side cover of the Lamp House and fasten the three quarter turn screws (reference 4 Image 7–33) of the cover.

   *Note:* Please ensure that the quarter turn screws turning wires are flush with the cover or interference will occur while inserting the Lamp House into the projector.

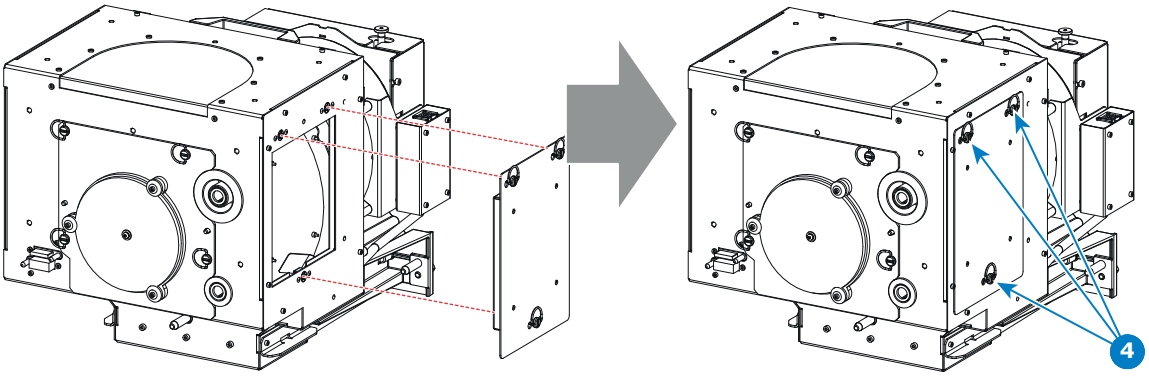


Image 7–33 Mount side cover

9. Secure the xenon lamp cathode with the hexagon socket head cap screw (reference 1 Image 7–34), spring washer (reference 2 Image 7–34) and plain washer (reference 3 Image 7–34). Fasten the screw with a torque of **5 Nm** (3,7 lbf*ft). Use a torque wrench with a 5 mm Allen socket.

   *Caution:* The hexagon socket head cap screw must have a length of 45 mm (not longer and not shorter).

*Caution:* Make sure that both pins (reference 11 Image 7–29) of the cathode adapter remain engaged in the forseen slots.

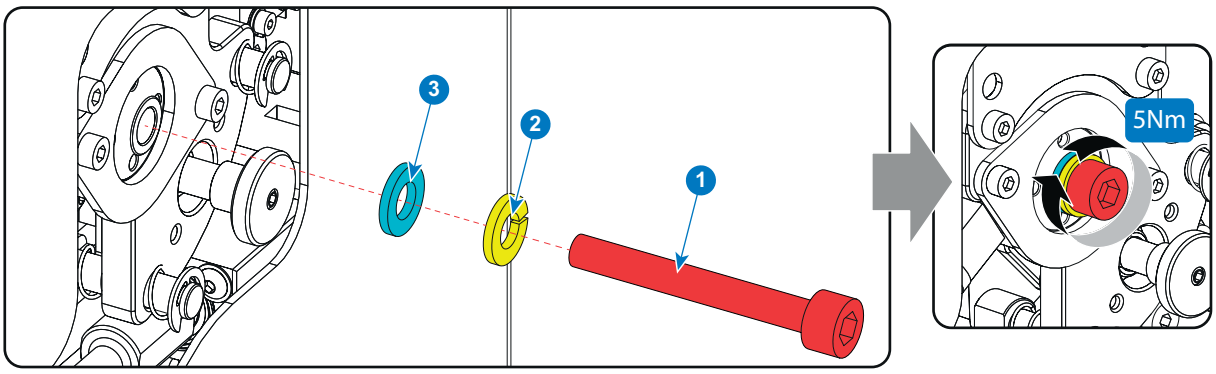


Image 7–34 Cathode screw, mount

**CAUTION:** The “LAMP INFO” parameters which are stored on a chip inside the Lamp House MUST be updated after each installation of an xenon lamp inside the Lamp House. Neglecting this update will result in poor performance and short life time of the xenon lamp.

A realignment of the xenon lamp in its reflector is required after the installation of the xenon lamp in the Lamp House.

# 7.6 Installation of the xenon lamp in motorized XL Lamp House

**WARNING:** DO NOT PERMIT UNAUTHORIZED PERSONNEL TO PERFORM OR ATTEMPT ANY PHASE OF XENON LAMP HANDLING OR SERVICE. ONLY TRAINED AND QUALIFIED TECHNICAL SERVICE PERSONNEL ARE ALLOWED TO HANDLE THE XENON LAMP.

**WARNING:** This procedure may only be performed by qualified technical service personnel.

**CAUTION:** Xenon compact arc lamps are highly pressurized. When ignited, the normal operating temperature of the bulb increases the pressure to a level at which the bulb may explode if not handled in strict accordance to the manufacturer's instructions. The bulb is stable at room temperature, but may still explode if dropped or otherwise mishandled. Whenever the lamp house, containing a xenon lamp, has to be dismantled or whenever the protective container or cloth has to be removed from the xenon lamp, authorized protective clothing MUST be worn!

**WARNING:** Always wear face protection (full face shield) when handling xenon lamps.

**WARNING:** Always wear protective clothing (welder's jacket) when handling xenon lamps.

**WARNING:** Always wear clean leather gloves with wrist protectors when handling xenon lamps.

This procedure assumes that the anode support assembly and the side cover are already removed from the Lamp House due to the removal of the xenon lamp.

## Required tools

- Torque wrench with a 2,5 mm Allen socket.
- Torque Allen key
- 22 mm open-end wrench.
- Torque wrench with a 22 mm hexagon socket.
- Torque wrench with a 5 mm Allen socket.

## How to install the xenon lamp

1. Install the appropriate lamp cathode adapter on the cathode of the xenon lamp. Note that some xenon lamps have a cathode pin with screw threat (reference 10 Image 7–35). Screw the adaptor on the anode pin as far as possible. Make sure that there is full contact between the adapter flat surface and the lamp base. Fasten the set screw (reference 9 Image 7–35) of the cathode adapter with a torque of **2.5Nm** (1.84 lbf*ft). Use a torque wrench with a 2.5mm Allen socket.

   *Tip:* See supported xenon bulb lamps to know which cathode adapter your lamp requires.

   *Caution:* Ensure that the adaptor is clean. Periodically clean the adapter. Remove oxide from silver plated adaptor with standard household metal polish (E.g. Brasso).

   *Warning:* Install the cathode adapter prior to removing the protective container or protective cloth from the xenon lamp.

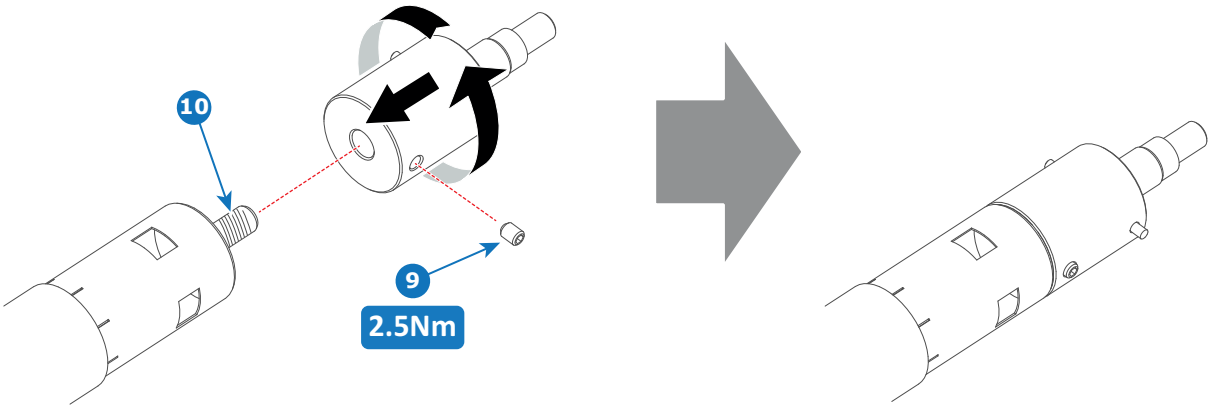


Image 7–35 Cathode adapter

2. Requires the xenon lamp an anode adapter? See supported xenon bulb lamps to know if your lamp requires an anode adapter
   ► If yes, install the appropriate lamp anode adapter on the anode of the xenon lamp. Fasten the set screw (reference 13 Image 7–36) of the anode adapter with a torque of **2.5Nm** (1.84 lbf*ft). Use a torque wrench with a 2.5mm Allen socket. Make sure that there is full contact between the adapter flat surface and the lamp base.

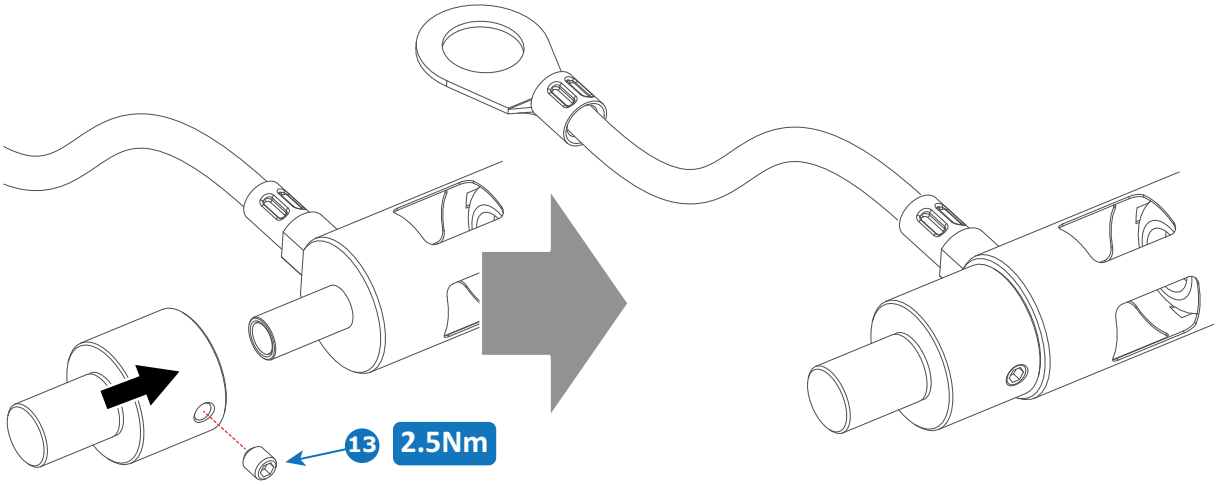


Image 7–36 Anode adapter

   ► If no, make sure that there is no anode adapter installed on the anode of the xenon lamp.

3. Install the anode wire lug (reference 7 Image 7–37) on the anode socket of the Lamp House as illustrated. Use an open-end wrench of 22 mm to hold the first nut (reference 5 Image 7–37) while fastening the second nut (reference 9 Image 7–37) with a torque of **25Nm** (18.4 lbf*ft) using a torque wrench. Ensure that there is a flat washer (reference 6 & 8 Image 7–37) at both sides of the wire lug (reference 7 Image 7–37).

   *Warning:* A torque of **25Nm** (18.4 lbf*ft) must be applied to fasten the nuts. Make sure that there is no tension on the anode wire of the xenon lamp.

   *Caution:* Do not tighten the first nut against the connector housing. There must be some play (minimum 1 mm to maximum 4 mm). This is important to insert the Lamp House smoothly into the projector

   *Note:* Alter tightening the two nuts, the connector should still be “floating”.

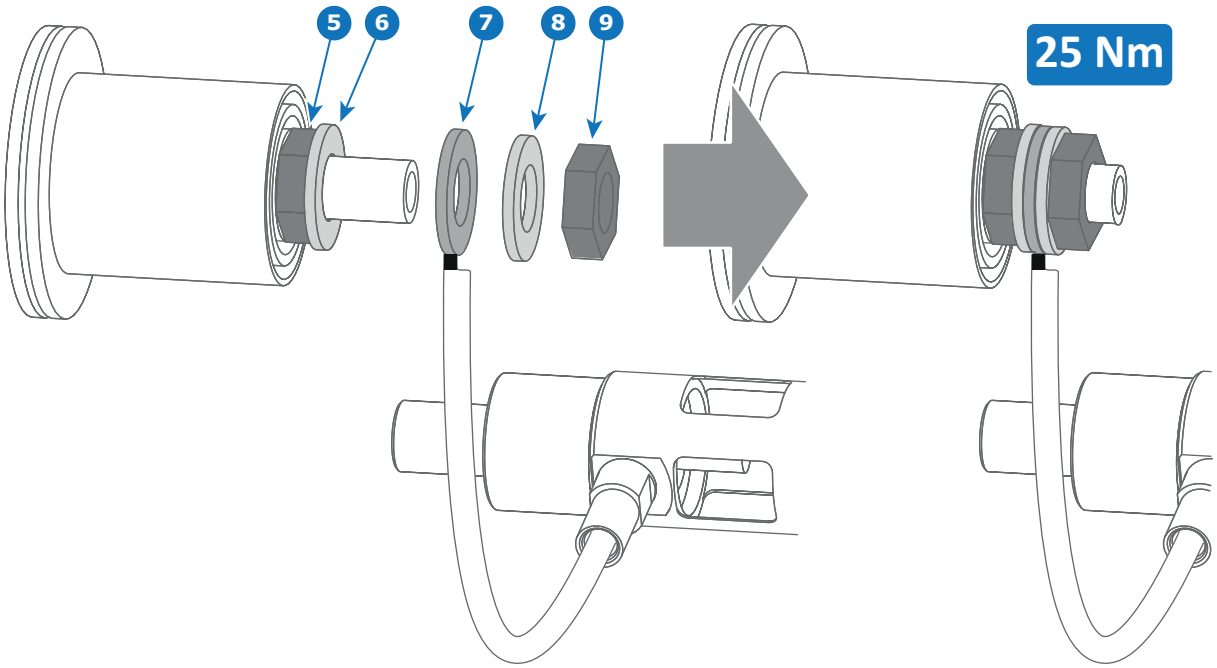


Image 7–37 Anode connection

*Tip:* Write down the serial number of the xenon lamp. You will need this while updating the lamp parameters after installation of the xenon lamp. The serial number of the xenon lamp is engraved in the neck of the xenon lamp.

4. Check the cathode connection inside the lamp house. Use an 22 mm open-end wrench to hold the first nut while fastening the second nut on the rod with a torque of **25Nm** (18.4 lbf*ft) using a torque wrench with 22 mm hexagon socket. Ensure that there is a flat washer at both sides of the wire lug. It's safer to do this check before the xenon lamp is installed to avoid accidental bumping against the xenon lamp.

   *Tip:* The cathode socket can easily pulled out from the Lamp House as a whole to perform this check.

   *Caution:* These cathode connections must be checked with every lamp change!

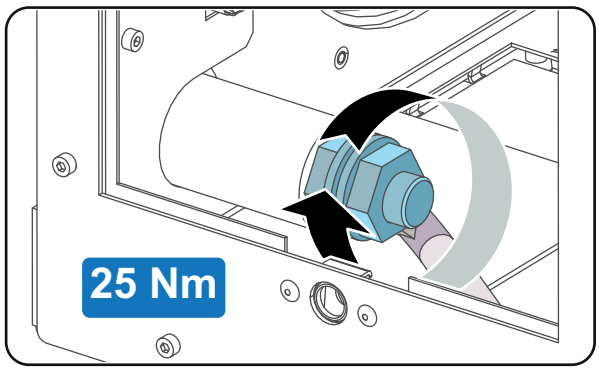


Image 7–38 Cathode connection

5. Check the cathode connection inside the lamp house. Use an 22 mm open-end wrench to hold the first nut while fastening the second nut on the rod with a torque of **25Nm** (18.4 lbf*ft) using a torque wrench with 22 mm hexagon socket. Ensure that there is a flat washer at both sides of the wire lug.

   *Caution:* These cathode connections must be checked with every lamp change!

6. Requires the lamp an anode adaptation bushing inside the anode support?

   *Tip:* See supported xenon bulb lamps to know if your lamp requires an anode adaptation bushing.

If yes, insert the anode adaptation bushing (reference 12 Image 7–39 and Image 7–42) into the integrated anode support of the UV blocker.

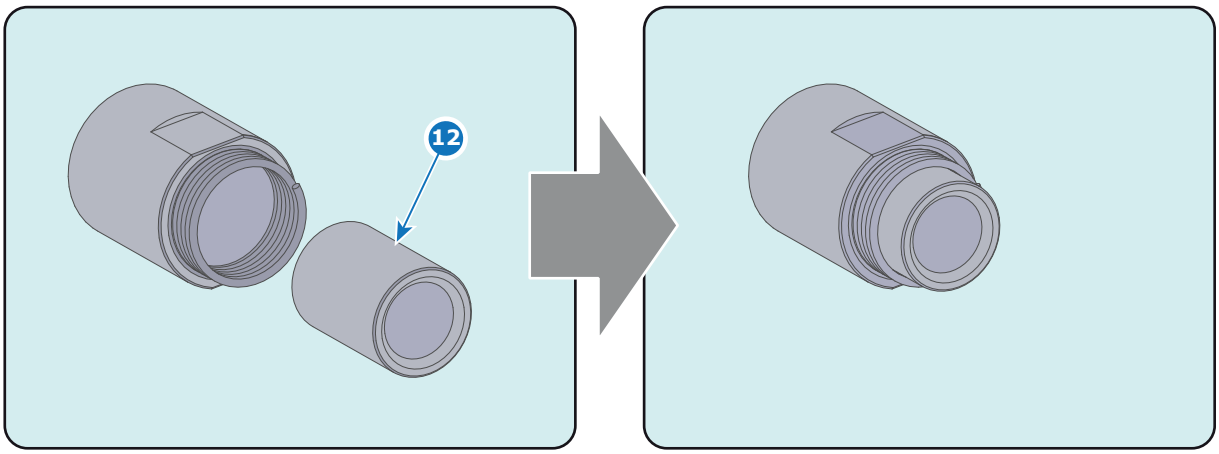


Image 7–39 Anode adaptation busing

If no, make sure that there is no anode adaptation bushing inserted into the anode support.

7. Remove the protective packing from the xenon lamp and gently insert the xenon lamp into the Lamp House as illustrated. Lamp cathode first, Make sure that the wire of the lamp anode is upwards oriented. While inserting the lamp, rotate it slightly, **engaging the pins** (reference 11 Image 7–40) of the cathode adapter in the foreseen slots. This is to ensure the lamp cathode is completely inserted. Keep supporting the anode of the lamp with one hand once the xenon lamp is in position.

*Caution:* Ensure that you wear protective clothing, a full face shield and protective gloves.

*Tip:* Write down the serial number of the xenon lamp. You will need this while updating the lamp parameters after installation of the xenon lamp. The serial number of the xenon lamp is engraved in the neck of the xenon lamp.

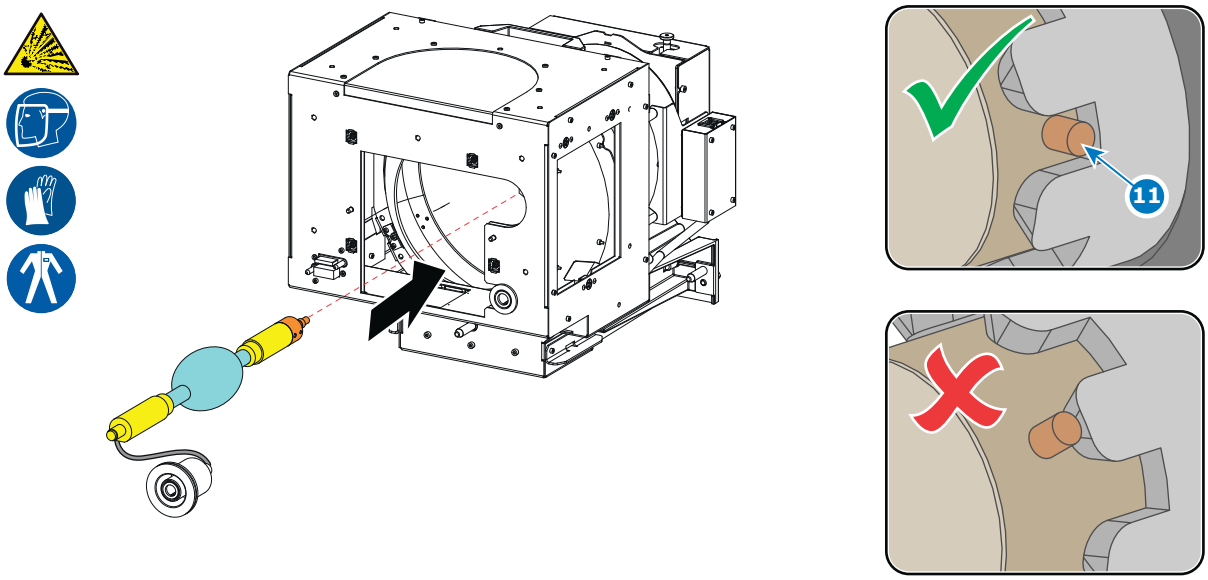


Image 7–40 Mounting lamp

8. Slide the anode connector in its position on the Lamp House as illustrated.

*Caution:* Avoid any tension on the anode wire, ensuring there is no mechanical stress on the lamp.

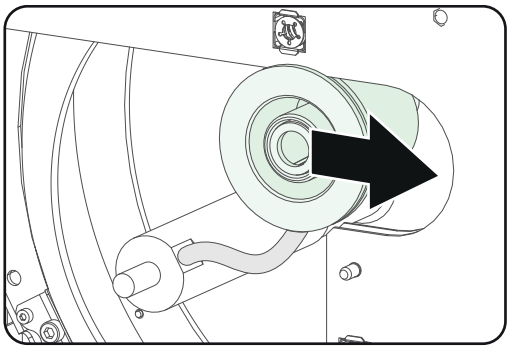

Image 7–41 Mounting anode

9. Install the UV blocker assembly as illustrated. Use the opening at the side of the Lamp House to guide the anode pin of the xenon lamp into the anode supporting mechanism of the UV blocker.

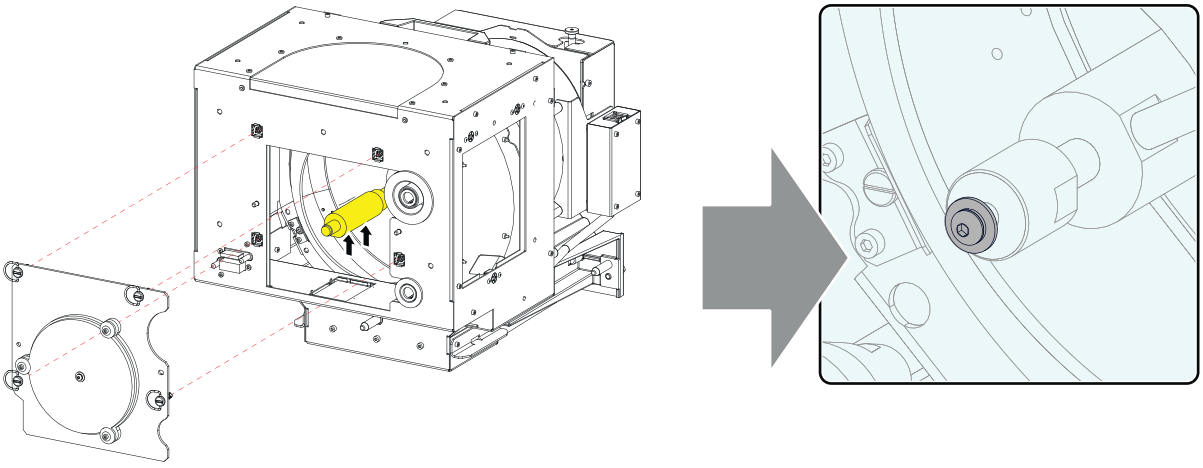

Image 7–42 UV filter assembly, mount

10. Secure the UV blocker by fastening the four quarter turn screws (reference 5 Image 7–43) as illustrated.

*Note:* Ensure that the quarter turn screws turning wires are flush with the cover or interference will occur while inserting the Lamp House into the projector.

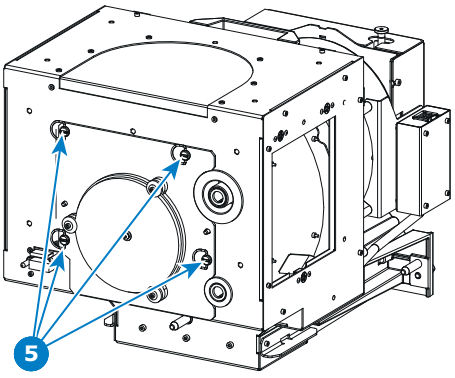


Image 7–43 UV blocker assembly, close

11. Install the side cover of the Lamp House and fasten the three quarter turn screws (reference 4 Image 7–44) of the cover.

*Note:* Please ensure that the quarter turn screws turning wires are flush with the cover or interference will occur while inserting the Lamp House into the projector.

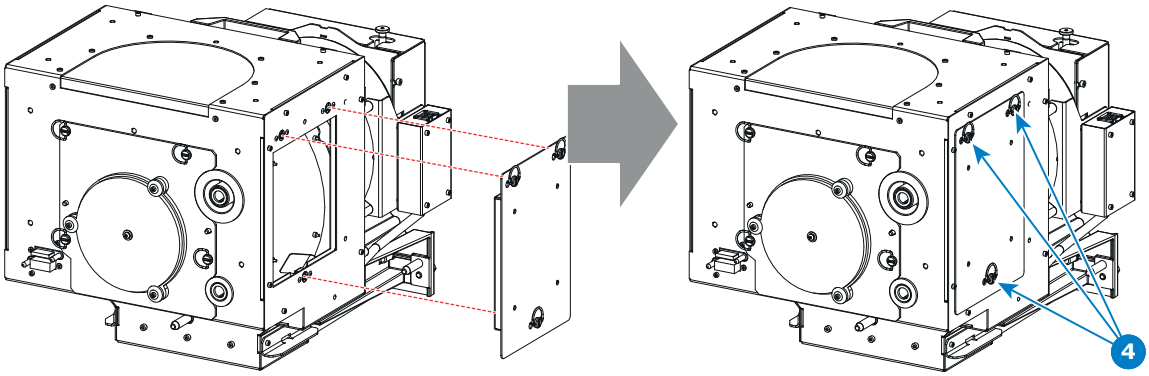


Image 7–44 Mount side cover

**12.** Secure the xenon lamp cathode with the hexagon socket head cap screw (reference 1 Image 7–45), spring washer (reference 2 Image 7–45) and plain washer (reference 3 Image 7–45). Fasten the screw with a torque of **5 Nm** (3,7 lbf*ft). Use a torque wrench with a 5 mm Allen socket.

*Caution:* The hexagon socket head cap screw must have a length of 45 mm (not longer and not shorter).

*Caution:* Make sure that both pins (reference 11 Image 7–40) of the cathode adapter remain engaged in the foreseen slots.

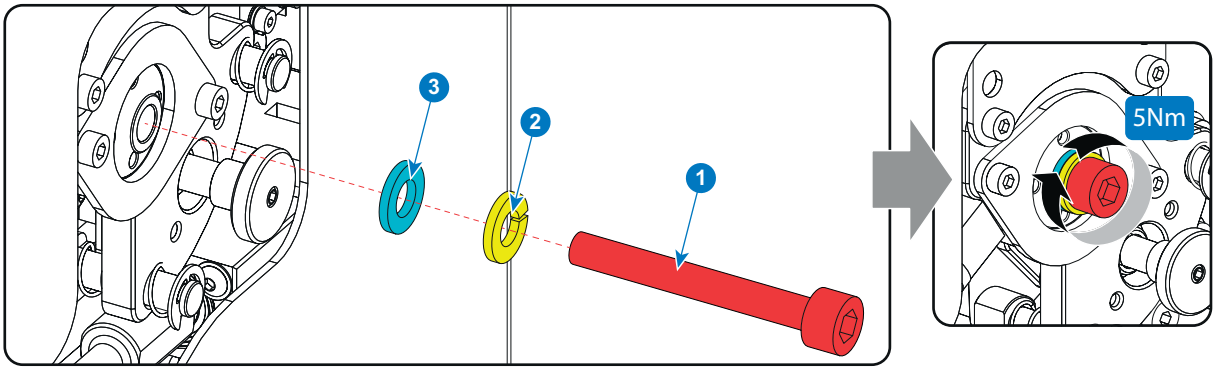


Image 7–45 Cathode screw, mount

**CAUTION:** The “LAMP INFO” parameters which are stored on a chip inside the Lamp House MUST be updated after each installation of an xenon lamp inside the Lamp House. Neglecting this update will result in poor performance and short life time of the xenon lamp.

A realignment of the xenon lamp in its reflector is required after the installation of the xenon lamp in the Lamp House.

# 7.7 Installation of the Lamp House

**WARNING:** This procedure may only be performed by qualified technical service personnel.

**CAUTION:** Due to its high internal pressure, the lamp may explode in either hot or cold states if improperly handled.

## Required tools

10mm nut driver or flat screw driver.

## How to install the Lamp House

1. Check if the seven quarter turn screws turning wires (reference 1Image 7–46) are flush with the cover or interference will occur while inserting the Lamp House into the projector.

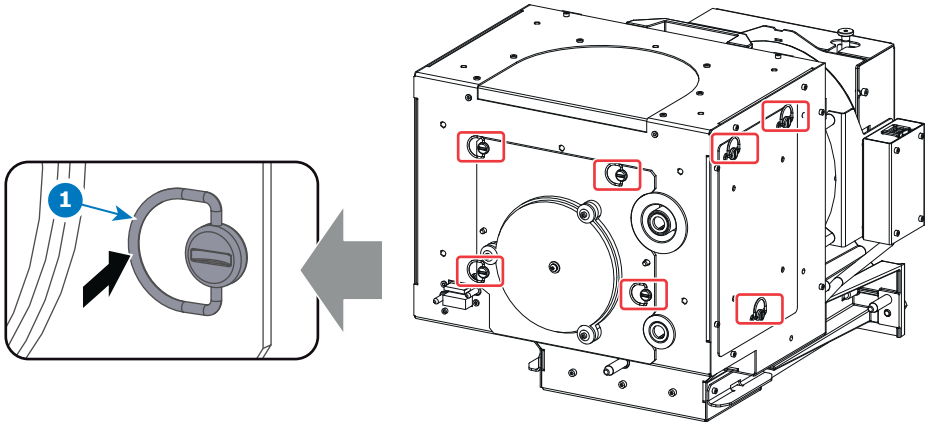


Image 7–46 Check lock screws

2. Grip the Lamp House by both handles and place the front of the Lamp House on the base plate inside the lamp compartment of the projector, lining up the foot of the Lamp House with the slots on the base.
3. Push the Lamp House fully into the slots.
4. Secure the Lamp House by fastening the two retaining screws (reference 1 Image 7–47) at the base of the Lamp House.
5. Reinstall the cover of the Lamp House compartment.

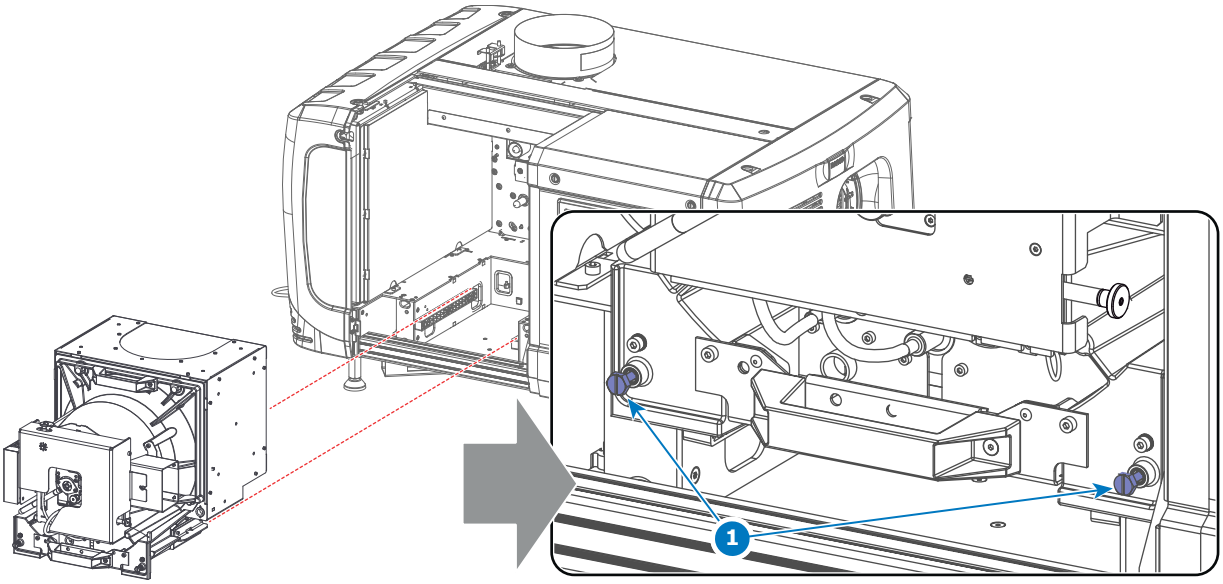


Image 7–47 Insert lamp house

# 7.8 Resetting the lamp parameters & lamp alignment

## Overview

To reset the lamp parameters, “Resetting the lamp parameters”, page 120

For the automatic lamp alignment, “Automatic lamp alignment motorized lamp house”, page 124

# 7.9 Replacement of the Lamp Info module

This procedure requires that the Lamp House is removed from the projector.

## Required tools

- 6mm nut driver.
- 3mm Allen wrench (depends on design).

## How to replace?

1. Remove the cover of the Lamp Info module by releasing the four screws (or short spacers) as illustrated (reference 1).

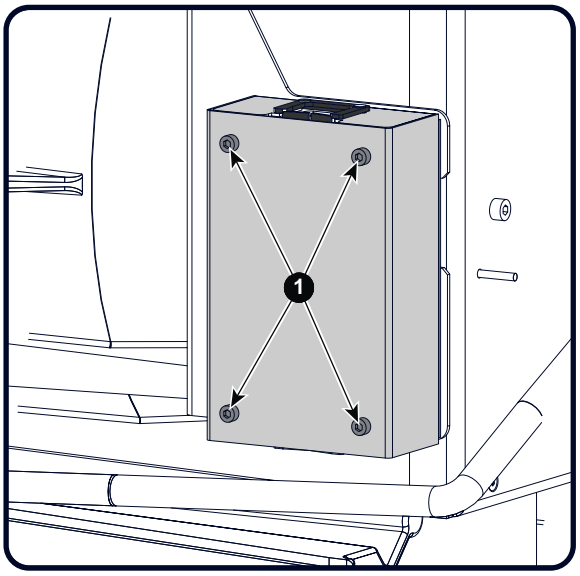


Image 7–48 Lamp info module cover

2. Disconnect all wire units (reference 1, 2, 3 and 4) from the Lamp Info module.

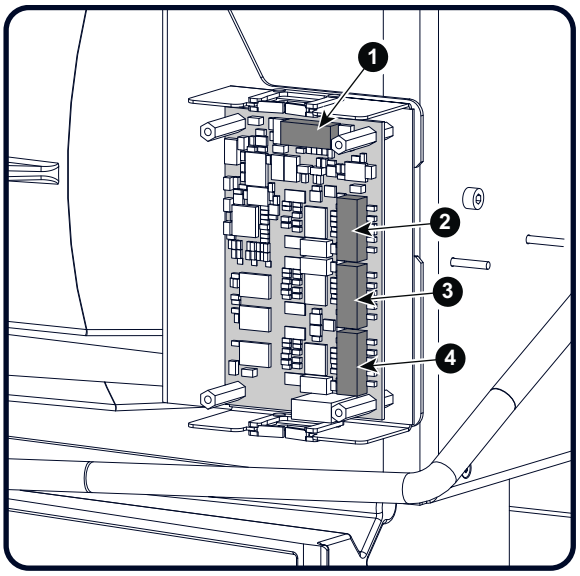


Image 7–49 Connections lamp info module

3. Remove the Lamp Info module from the Lamp House by releasing the four spacers as illustrated. Use for that a 6 mm nut driver.

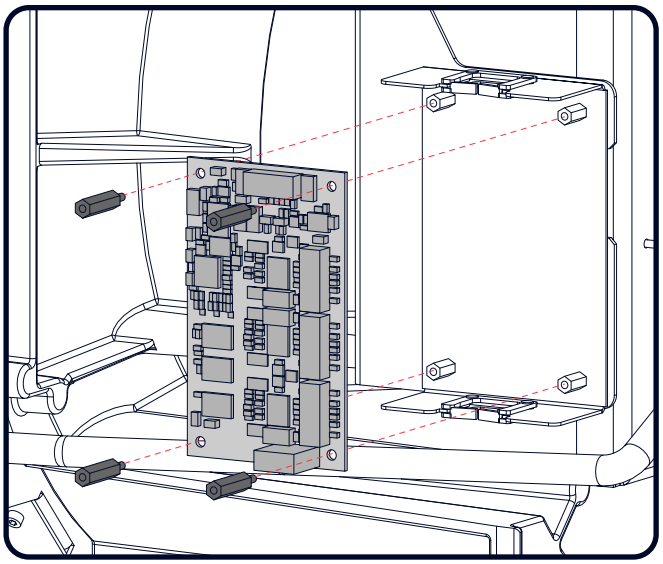

Image 7–50 Removing lamp info module

4. Reinstall a new Lamp Info module and fasten with four spacers. Use a 6 mm nut driver.

   *Note:* Make sure that the Lamp Info module is correctly oriented. See corresponding drawing.

5. Reconnect all three wire units (reference 2, 3 & 4) from the stepper motors (if motorized lamp house) and the wire unit (reference 1) from the Lamp House with the Lamp Info module. Respect the color marking on the connectors.

6. Reinstall the cover of the Lamp Info module as illustrated. Fasten with four screws (or short spacers) (reference 1).

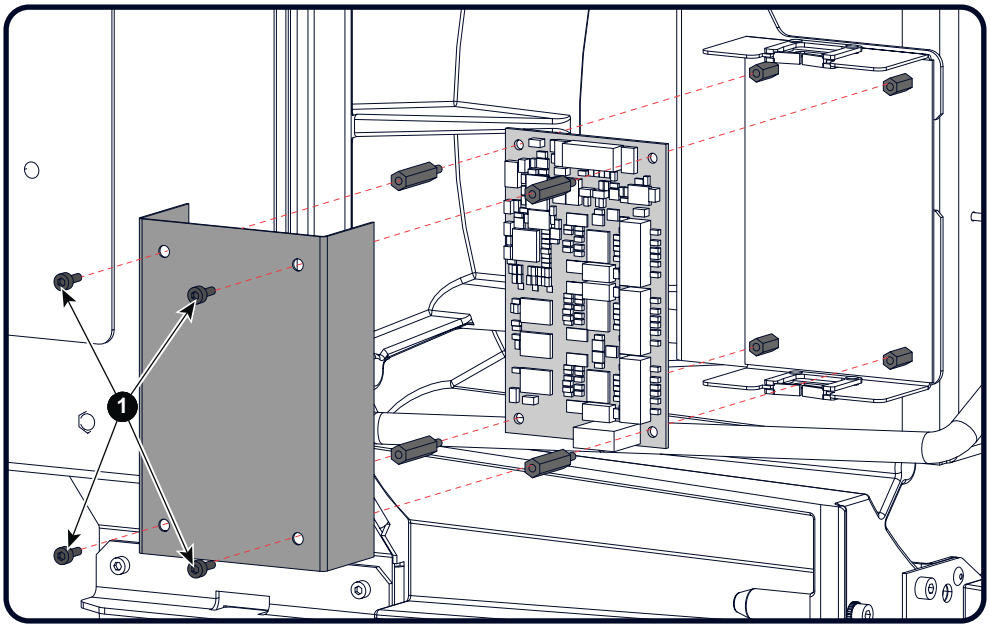


Image 7–51 Lamp info module on lamp house

# 7.10 Replacement of the UV blocker

This procedure requires that the Lamp House is removed from the projector. Futhermore, this procedure is applicable upon a Lamp House equipped with an UV blocker with an integrated anode support instead of a three leg anode support. It is recommended to replace a three leg anode support with an integrated anode support. The three leg anode support is no longer available.

**CAUTION:** The person that performs this procedure MUST be wearing a full face shield with neck protector, a welder's jacket and clean leather gloves with wrist protectors. This is required to safely dismantle or assemble the lamp house, which contains a xenon lamp.

## Required tools

- 2,5 mm Allen wrench.
- Latex or cotton gloves.

## How to replace

1. Remove the side cover of the Lamp House by releasing the two quarter turn screws (reference 4 Image 7–52) at the bottom of the side cover as illustrated.

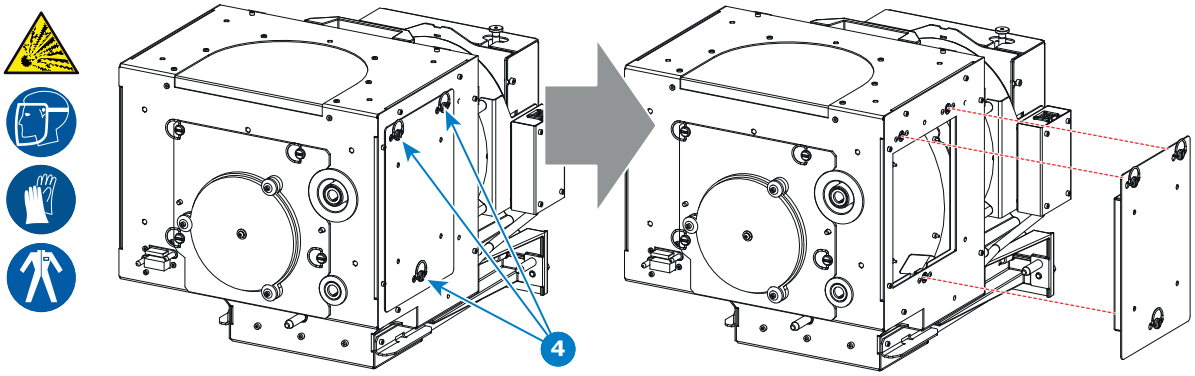


Image 7–52

2. Release the four quarter turn screws (reference 5 Image 7–53) of the UV blocker assembly as illustrated. Make sure that the anode support remains in its position while releasing the screws.

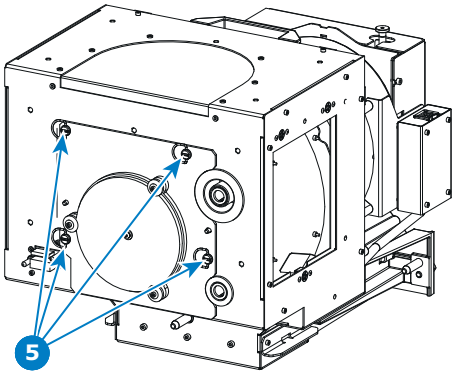


Image 7–53

3. Support the xenon lamp inside the Lamp House with one hand while removing the UV blocker assembly from the lamp house. Note that some xenon lamps are installed with an anode adaptation bushing

*Warning:* Supporting the xenon lamp with one hand prevents the xenon lamp from dropping and colliding with the chassis of the Lamp House.

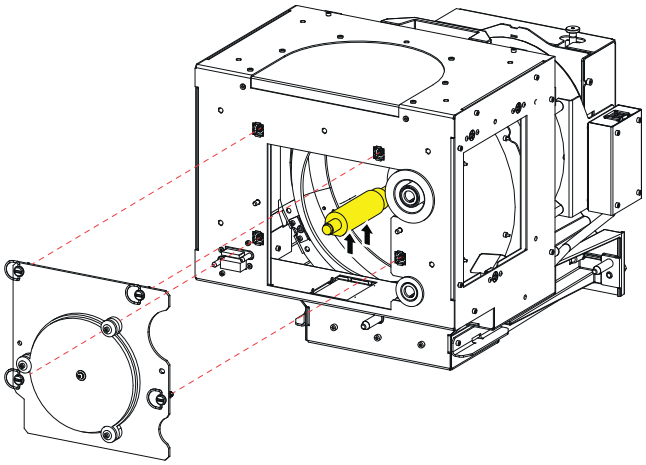

Image 7–54

4. Remove one of the three washers (reference 2 Image 7–55) which secure the UV blocker. Use a 2,5 mm Allen wrench to loosen the hexagon socket head cap screw (reference 1 Image 7–55).
5. Loosen the fixation screws of the remaining two washers with a few turns. Use a 2,5 mm Allen wrench.

   *Note:* The fixation screws may be secured with threadlocker. Only in case of frequently transported projectors it is necessary to apply threadlocker to the screws again. This is not needed in case of a Digital Cinema projector.

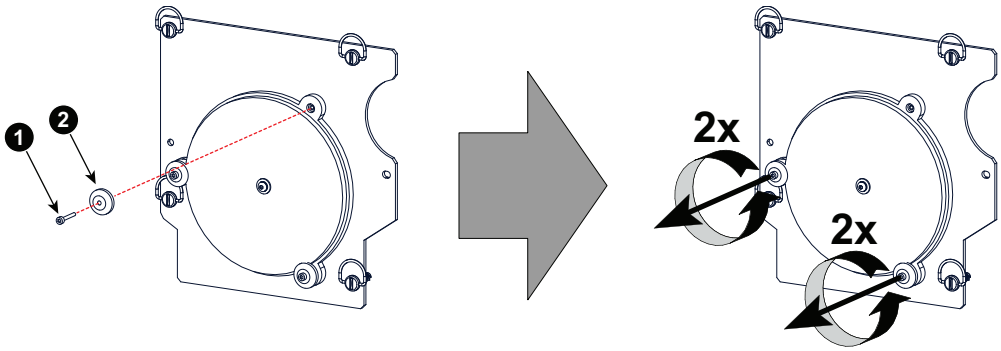


Image 7–55

6. Replace the UV blocker with integrated anode support with a new one.

   *Caution:* Do not touch the new UV blocker with bare fingers. Wear latex or cotton gloves.

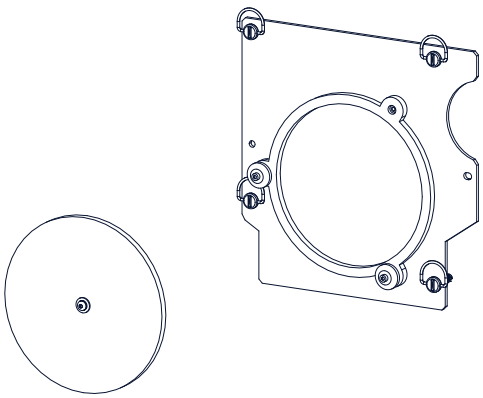

Image 7–56

*Note:* One side of the UV blocker is marked with a white dot on the border. The UV blocker must be mounted so that the glass side with the white dot is the outer side of the Lamp House.

7. Fasten the three spacers which hold the UV blocker. Use a 2,5 mm Allen wrench.

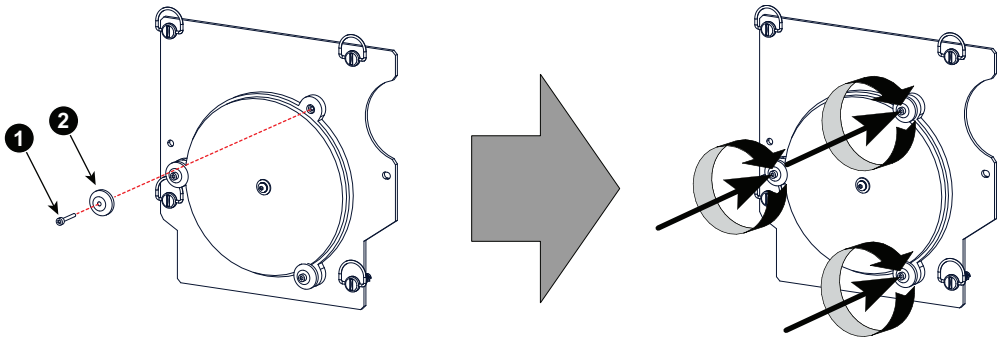


Image 7–57

*Note:* Notwithstanding that the fixation screws were original glued it is now not needed to apply glue on the fixation screws. The glue was be default applied at factory because this part is used on several common platforms. Digital Cinema projectors do not require that these screws are fixated with glue.

8. Install the UV blocker assembly as illustrated. Make sure that the xenon lamp is properly supported by the lamp supporting mechanism. Use the opening at the side of the Lamp House to guide the supporting pin of the xenon lamp into the supporting mechanism. Make sure that the tick wire of the lamp anode is upwards oriented.

*Caution:* Do not forget to use an anode adaptation bushing in case one is needed for the xenon lamp inside the Lamp House.

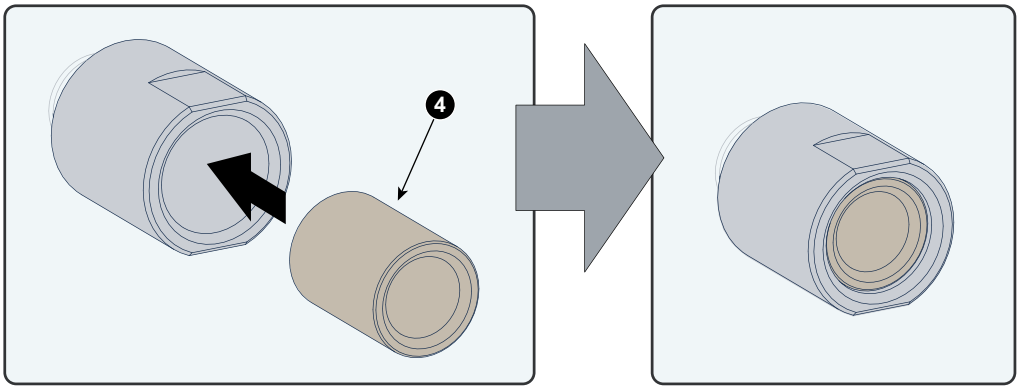


Image 7–58

*Tip:* Check if the UV blocker is clean. If not, see procedure “Cleaning the UV blocker of the Lamp House”, page 149, before installing the UV blocker assembly on the Lamp House.

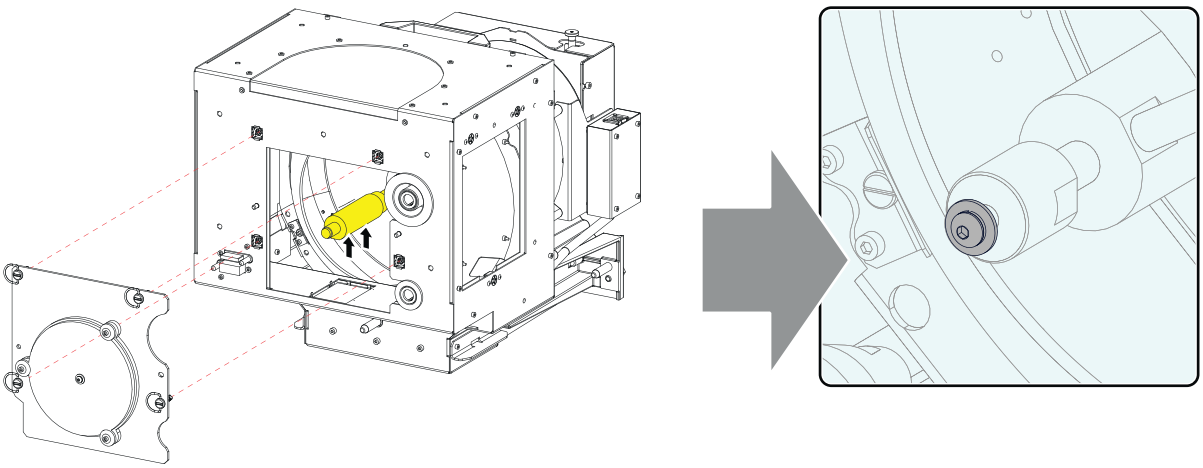

Image 7–59 UV filter assembly, mount

9. Secure the UV blocker by fastening the four quarter turn screws (reference 2 Image 7–60) as illustrated.

*Note:* Please ensure that the quarter turn screws turning wires are flush with the cover or interference will occur while inserting the Lamp House into the projector.

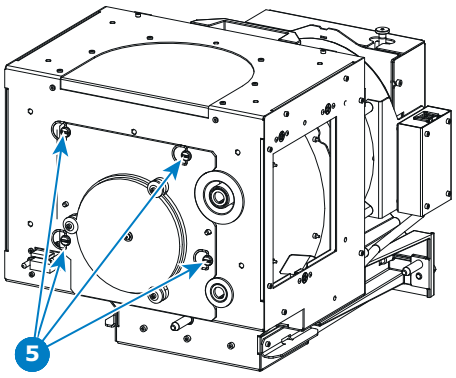


Image 7–60 UV blocker assembly, close

**10.** Install the side cover of the Lamp House and fasten the two quarter turn screws (reference 4 Image 7–61) at the bottom of the cover.

*Note:* Please ensure that the quarter turn screws turning wires are flush with the cover or interference will occur while inserting the Lamp House into the projector.

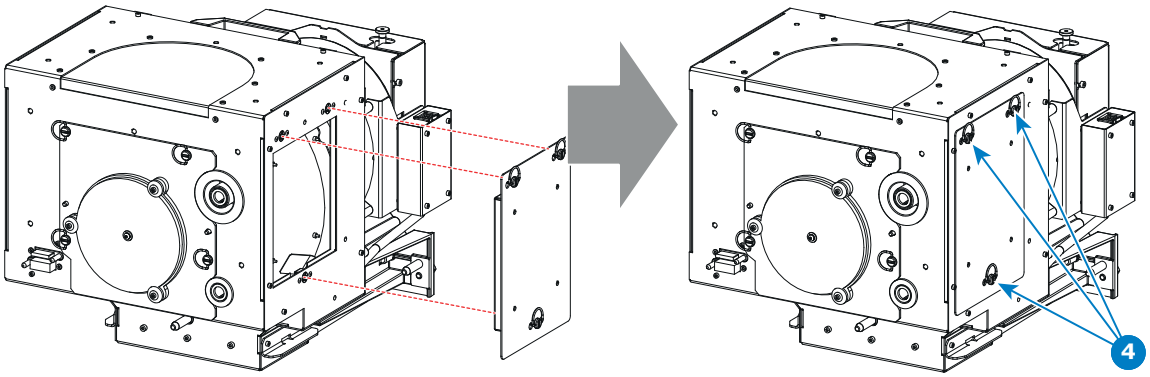


Image 7–61 Mount side cover

# 7.11 Replacement of the Lamp Reflector

## Lamp Reflector assembly

The reflector has three major parts and two sets of mounting holes, one set for the old lamp house and one set for the new lamp house.

The following parts can be distinguished: one metal mounting ring, one spheric glass mirror and one elliptic glass mirror. Both mirrors are assembled on the metal ring and are perfectly aligned with each other.

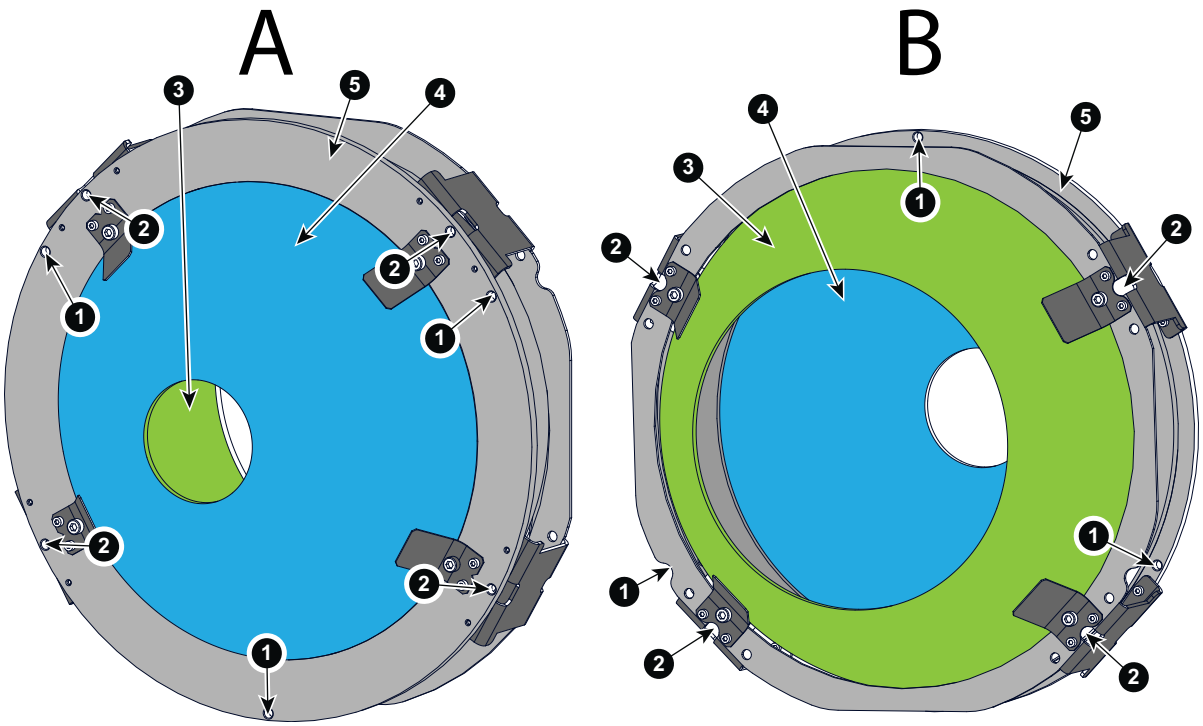


Image 7–62

**A** Back view , side ti be mounted to lamp house
**B** Front view
**1** Mounting holes for old lamp house
**2** Mounting holes for new lamp house
**3** Spheric glass mirror
**4** Elliptic glass mirror
**5** Metal mounting ring

## How to replace

1. Disconnect the cathode wire lug (reference 3 Image 7–63) from the Lamp House as illustrated. Use two 22 mm open-end wrenches to release the nuts (reference 4 & 5 Image 7–63).

   *Tip:* Place the plane washers (reference 6 & 7 Image 7–63) and nut back on the rod after the lug is removed

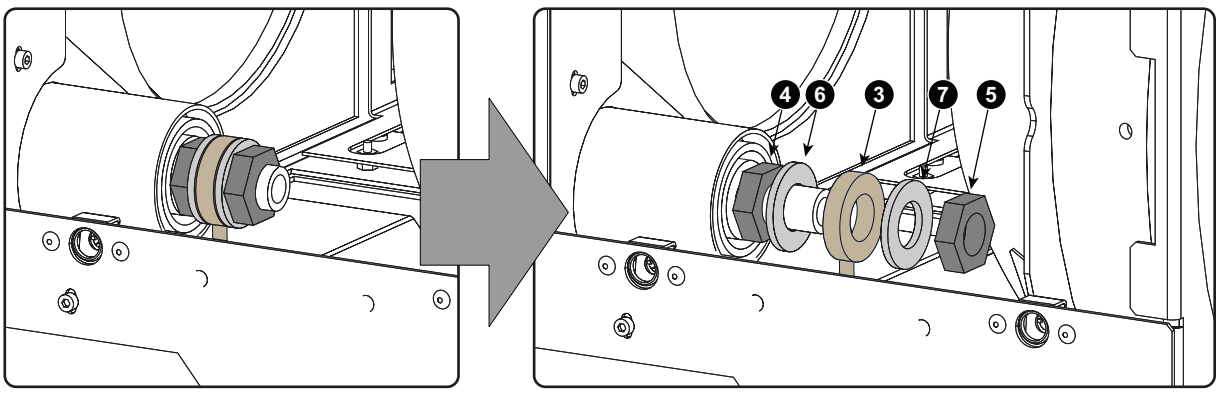

Image 7–63 Cathode wire lug

2. Cut the cable tie (reference 2 Image 7–64) of the wire unit from the Lamp Info module. This gives the wire unit more play when removing the front assembly of the Lamp House.

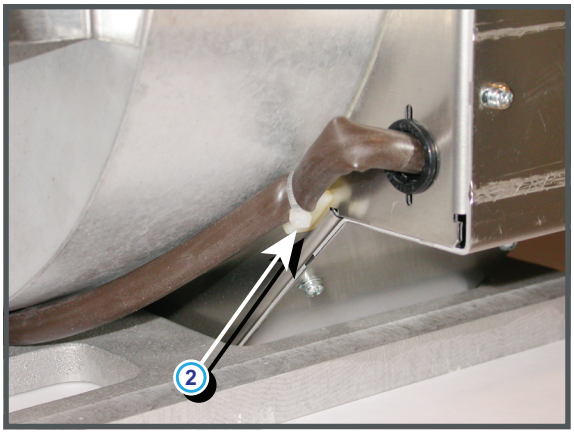


Image 7–64

3. Remove the 13 indicated screws (reference 1 Image 7–65). Use a 2,5 mm Allen wrench.

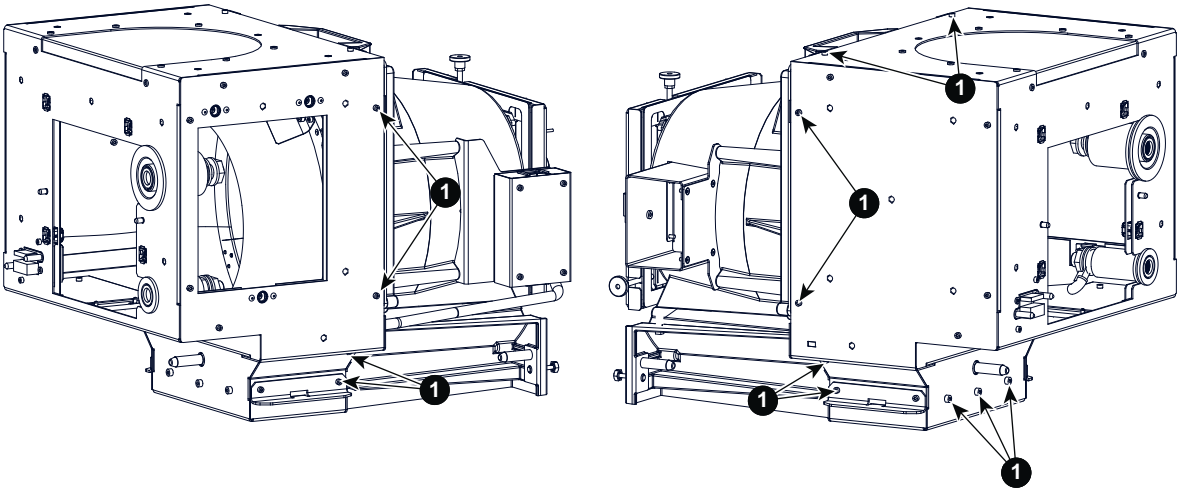


Image 7–65

4. Slide the front assembly a little bit to the front and turn it over as indicated.

*Caution:* Do not damage the wire unit (reference 3 Image 7–66). The front assembly is still connected via the wire unit of the Lamp Info module with the base of the Lamp House. This wire unit has some play so that you can turn the front assembly away from the Lamp House

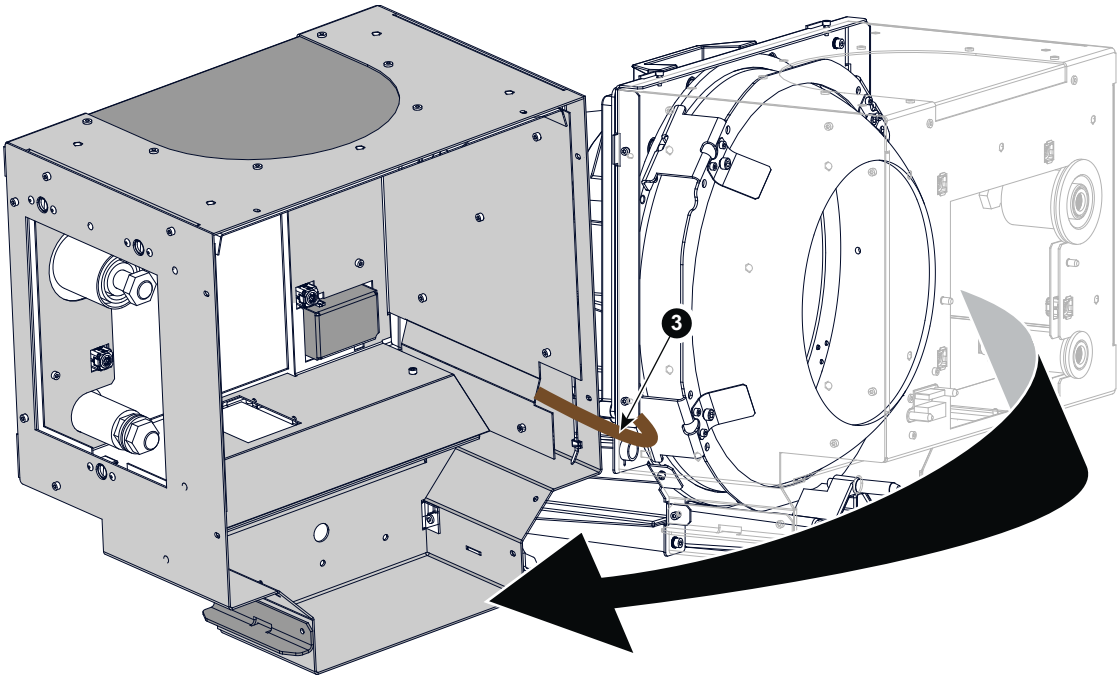


Image 7–66

5. Remove the Reflector assembly from the Lamp House by loosening the four hexagon socket head cap screws (reference 6 Image 7–67) via the indicated holes (reference 6) as illustrated. Use a 3 mm Allen wrench.

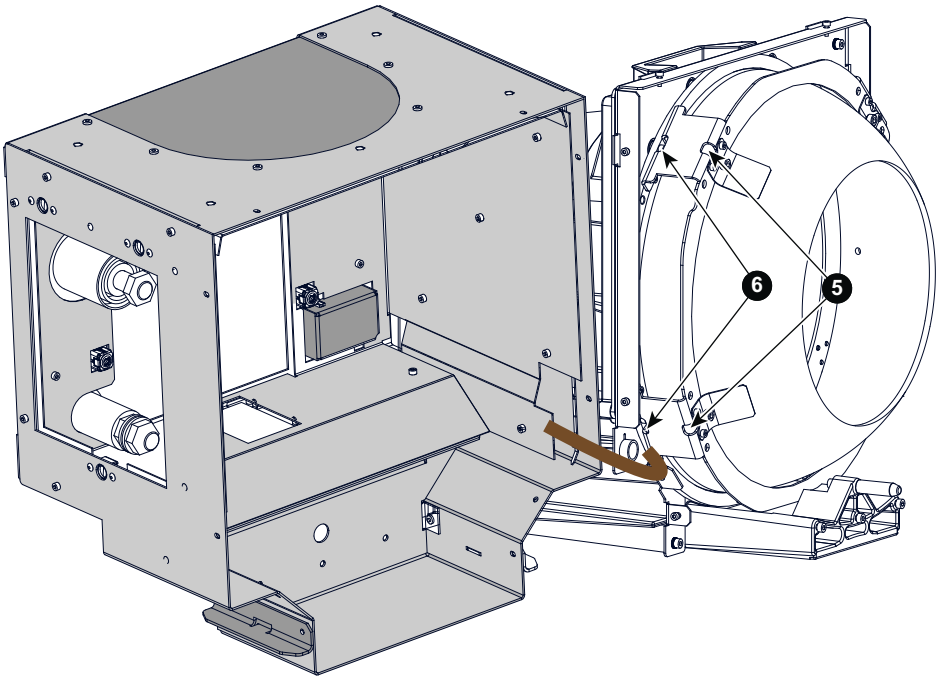


Image 7–67 Remove fixation screws

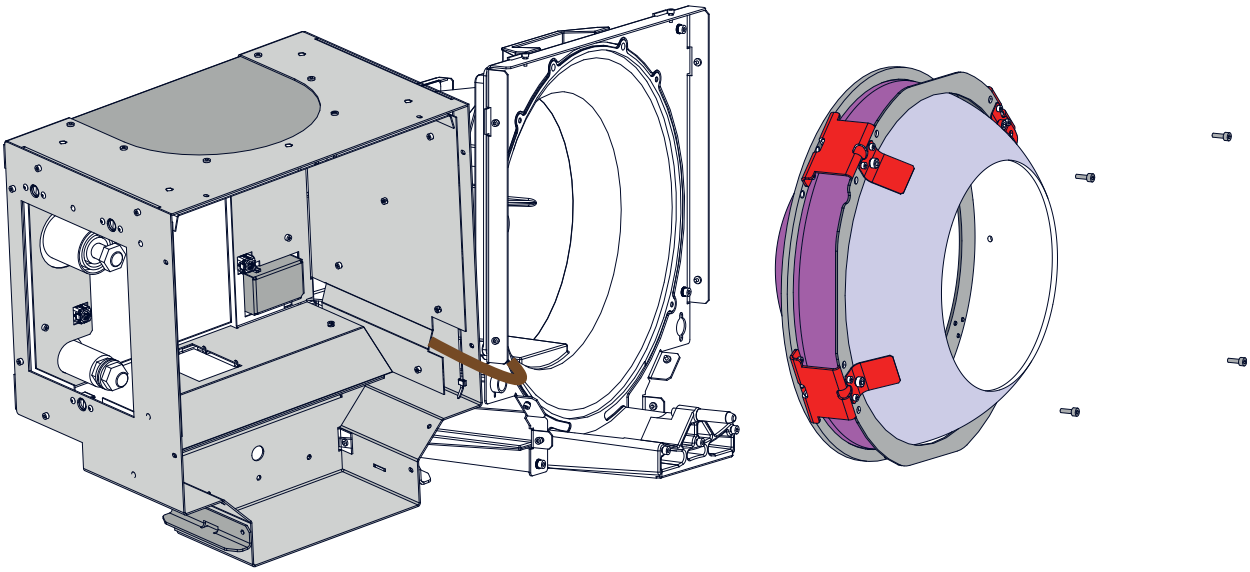

Image 7–68 Remove reflector assembly

6. Place a new Reflector assembly in the Lamp House and fasten with 4 hexagon head cap screws. Use a 3 mm Allen wrench to fasten the screws (reference 6 Image 7–67).

   *Caution:* Do not touch the glass of the Reflector assembly. Hold the Reflector assembly by its metal mounting ring.

7. Reinstall the front assembly of the Lamp House. Use a 2,5 mm Allen wrench to fasten the 13 hexagon head cap screws (reference 1Image 7–65).

   *Caution:* Take care that the wire unit (reference 3 Image 7–66) of the Lamp Info module does not get jammed.

8. Reconnect the cathode wire with the Lamp House. Make sure to place a plane washer (reference 6 and 7 Image 7–69) between the nuts and the wire lug (reference 3 Image 7–69). Use a torque of **25 Nm** (18,4 lbf*ft) to fasten the nuts (reference 4 and 5 Image 7–69). Block the first nut (reference 4 Image 7–69) with a 22 mm open-end wrench while applying a torque of 25 Nm on the second nut (reference 5 Image 7–69) with a torque wrench.

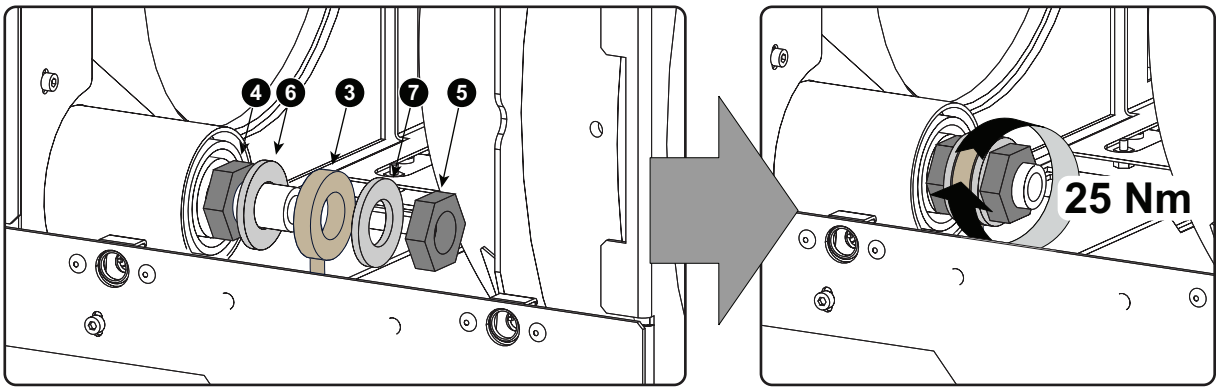


Image 7–69

# 7.12 Lubrication of the XYZ mechanism

## How often lubricating the XYZ mechanism?

Barco recommends to lubricate the XYZ mechanism of the Motorized Lamp House every year.

## Required parts

High-temperature and long-term lubricant (Barco order no: B1909289K) with an expiry date one year from now.

## How to lubricate the XYZ mechanism

1. Turn out screw 1 and loosen screws 2;3 and 4)

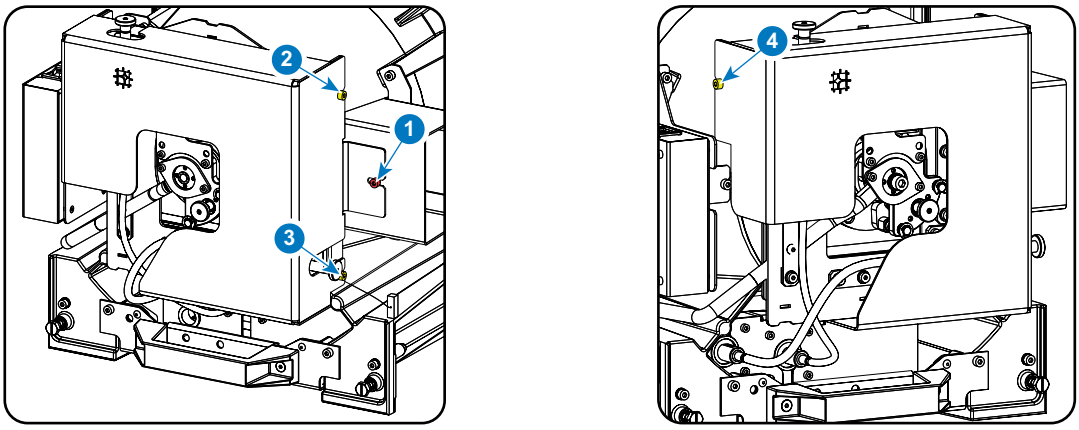


Image 7–70 Back cover removal

2. Take off the cover.

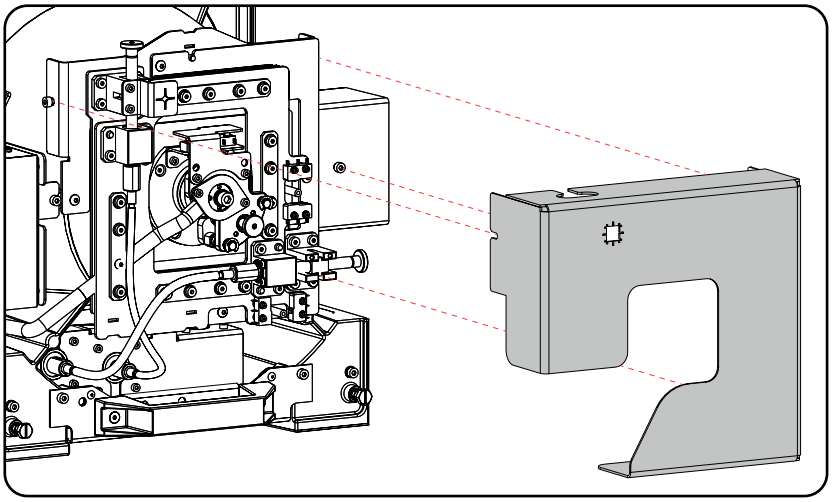

Image 7–71 Remove cover

3. Lubricate the adjustment mechanism at the points L (see image Image 7–72).

   Lubricate the screw thread of the thumbscrews.

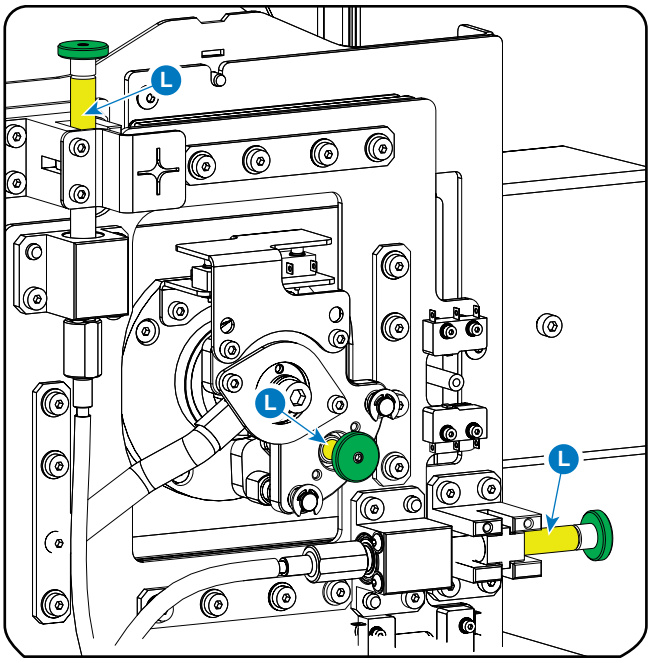


Image 7–72 Lubrication

4. Turn the tumbscrews in and out to ensure that the rods are completely lubricated.
5. Reinstall the cover.
6. Realignment of the xenon lamp is required after lubricating the XYZ mechanism of the Motorized Lamp House.

# 7.13 Replacing a stepper motor

## Introduction

Depending on which motor you have to replace, more or less parts have to be removed.

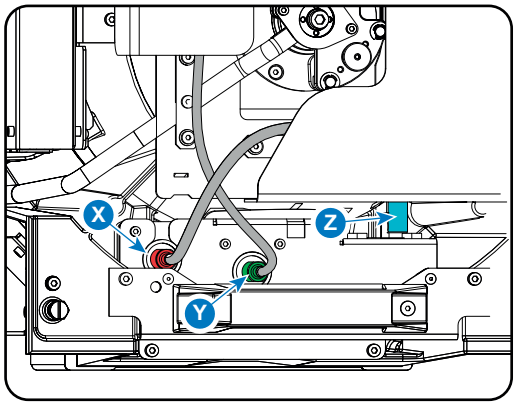


Image 7–73

To replace the X adjustment stepper motor, no parts must be removed.

To replace the Y adjustment stepper motor, only the handle must be removed.

To replace the Z adjustment stepper motor, the complete motor assembly must be removed.

## How to replace

1. Make the bottom side of the Motorized Lamp House accessible by placing the Motorized Lamp House with the Lamp Info module facing upwards upon a flat and clean surface.
2. Disconnect the electrical wires (at the bottom side) from the three stepper motors (reference 1, 2 & 3) and guide the wires through the grommet

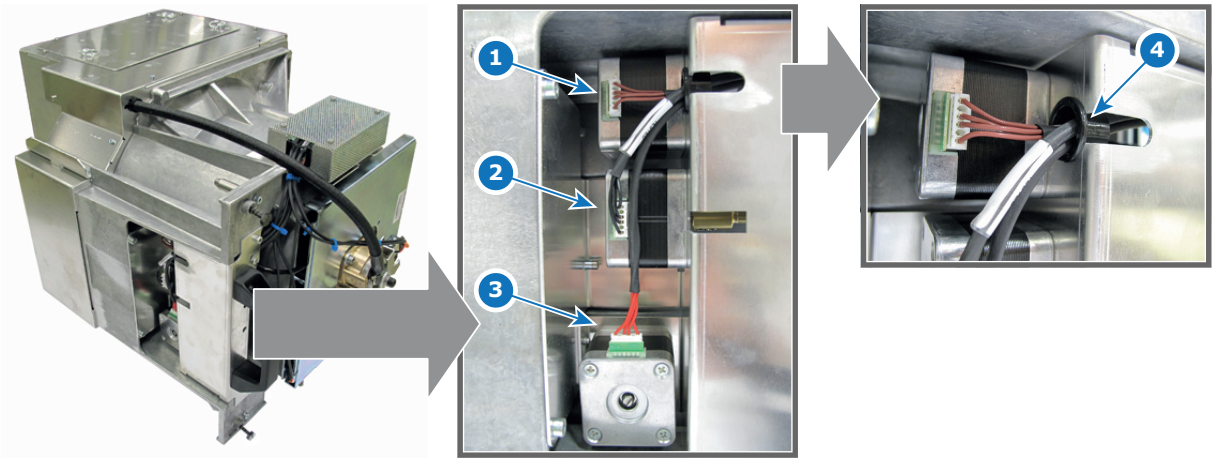


Image 7–74

1 Stepper motor Y motion. (brown wires)
2 Stepper motor X motion. (black wires)
3 Stepper motor Z motion. (red wires)
4 Grommet

3. Turn the thumbscrews of the X and Y adjustment until the fixation screws (reference 5) of the X and Y flex cables are visible through the holes in the sheet metal at the bottom of the Motorized Lamp House.

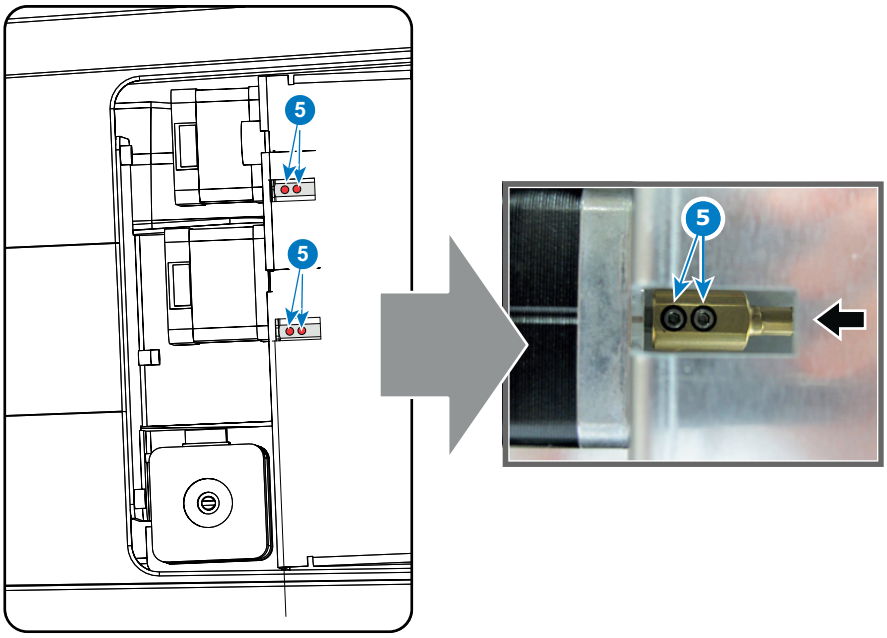


Image 7–75

4. Disconnect the flex cables of the X and Y adjustment from the stepper motors. Use a 2mm Allen wrench the loosen the two set screws of each flex cable.
5. Disconnect the flex cable of the Z adjustment. Use a 2mm Allen wrench to loosen the two set screws (reference 6) of the flex cable.

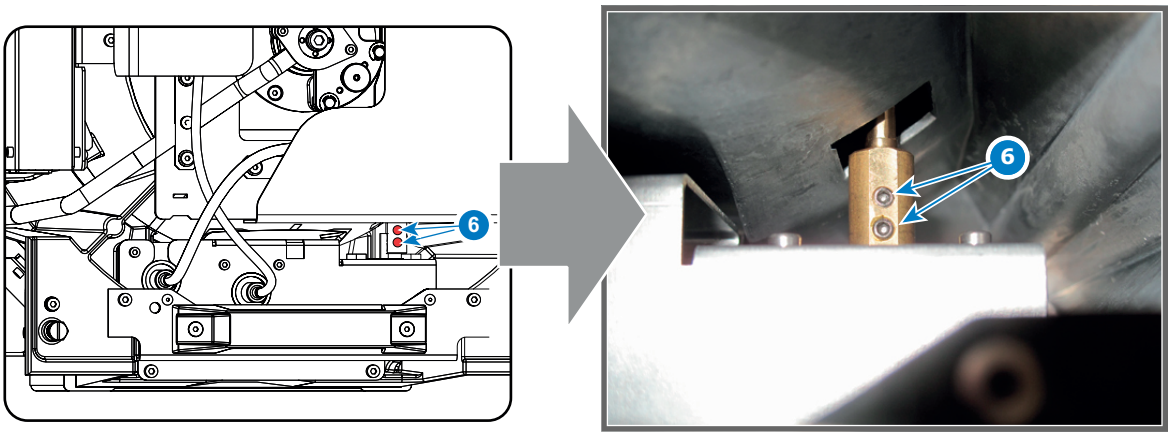


Image 7–76

6. Remove the stepper motor assembly from the base of the Motorized Lamp House. Use a 3mm Allen wrench to loosen the four screws (reference 1 and 2 Image 7–77).

   Slide out the assembly.

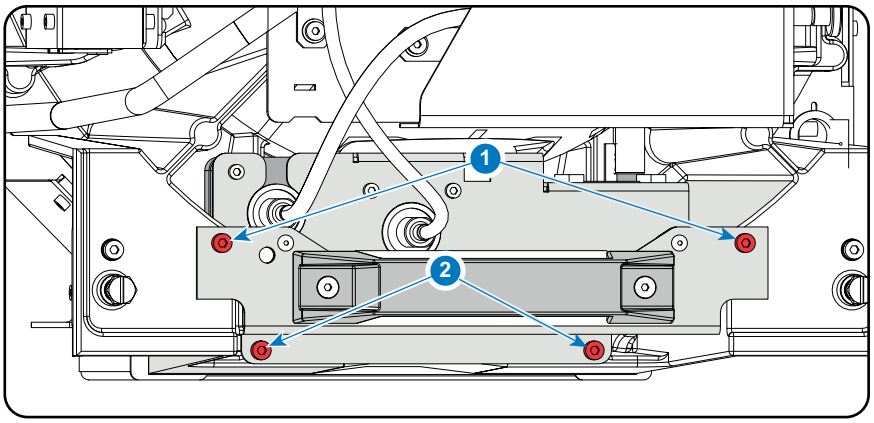


Image 7–77

7. Replace the defect stepper motor with a new one. Use a T10 Torx screwdriver to loosen/fasten the four screws of the stepper motor.

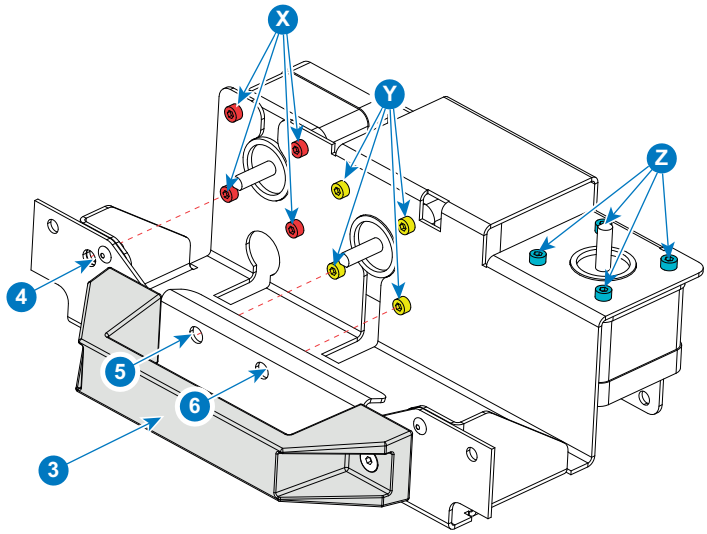


Image 7–78

For the X-adjustment, remove the 4 screws indicated with X. One screw can be reached through the hole in the front plate (reference 4)

For the Y-adjustment, first remove the handle by turning out the 2 screws. Then remove the 4 screws Y 2 of them can be reached through the holes 4 and 5 in the front plate.

For the Z-adjustment, remove the 4 screws indicted with Z.

8. Reinstall the stepper motors assembly.

9. Reconnect the flex cables with their respective stepper motor. Use a 2mm Allen wrench to fasten the two set screws of each flex cable.

10. Guide the electrical wires through the grommet and connect the wire with the stepper motors.
    - Brown wires with the stepper motor for Y motion.
    - Red wires with the stepper motor for Z motion.
    - Black wires with the stepper motor for X motion.

# 7.14 Cleaning the UV blocker and the reflector

## How to clean

For more information about cleaning the UV blocker, see “*Cleaning the UV blocker of the Lamp House*”, page 149.

For more information about cleaning the reflector, see “*Cleaning the Reflector of the Lamp House*”, page 150.

# 8 Cold Mirror


8.1 Introduction ..... 198
8.2 Replacement of the Cold Mirror assembly ..... 199
8.3 Replace the Cold Mirror ..... 202
8.4 Adjusting the Cold Mirror ..... 205
8.5 Cleaning the Cold Mirror ..... 209


## About this chapter

This chapter describes how to replace the Cold Mirror. It also describes the adjustments for the Cold Mirror and when an adjustment or cleaning is needed.

**CAUTION:** Typically the Cold Mirror should never be readjusted in the field except when the Cold Mirror or Lamp Reflector have been replaced. In case a readjustment is required follow the instructions in this chapter precisely. Only qualified technicians who have experience with adjusting the Cold Mirror may adjust the Cold Mirror. A misaligned Cold Mirror may cause irreversible damage to other parts of the projector!

Two types of Cold Mirror assemblies are used. The difference lays in the orientation of the adjustment screws. Cold Mirror assemblies of the first generation have the adjustment screws oriented with the head of the screw to the heat sink side. Cold Mirror assemblies of the second generation have the adjustment screws oriented with the head of the screw to the mirror side. Where relevant in this chapter, the procedures are split up.

# 8.1 Introduction

## Functionality of the Cold Mirror

The location of the Cold Mirror in the light path is between the light source (xenon lamp) and the light pipe. The Cold Mirror reflects the visible light and absorbs the infra red light. Due to this absorbing, a lot of heat is produced. The Cold Mirror is mounted with the rear side upon a big heat sink. The fan below the heat sink blows cold air on the Cold Mirror and heat sink. The hot air is transported to the outside of the projector. The Cold Mirror has three adjustment screws to modify the position of the Cold Mirror so that the centre of the light spot is precisely reflected in the centre of the integration rod entrance for optimal performance.

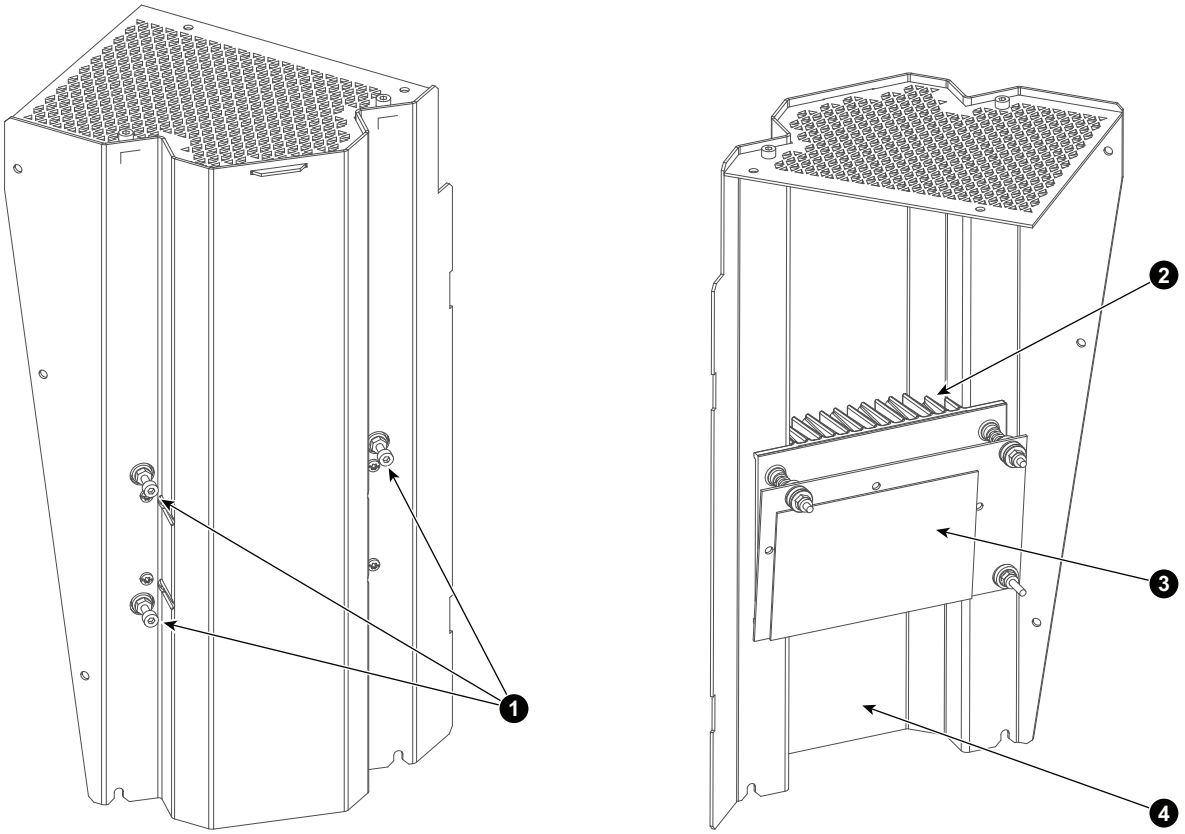


Image 8–1

1 Adjustment screws.
2 Heat sink.
3 Cold Mirror.
4 Mounting plate.

## Diagnostic

The easiest way to check the condition of the Cold Mirror is by removing the Lamp House. When the Lamp House is removed, the Cold Mirror becomes visible at the end of the lamp compartment. In case the Cold Mirror is not damaged but dirt is clearly visible upon the surface of the mirror it is recommended to clean the Cold Mirror. Always replace the Cold Mirror with a new one in case the Cold Mirror is damaged. Possible damages are:

- Cold Mirror is broken.
- Coating peels off.
- Cold Mirror is cracked.

The light output on the screen will be lower than the normal light output in case of a damaged or dirty Cold Mirror.

# 8.2 Replacement of the Cold Mirror assembly

To replace the Cold Mirror the Start Pulse Generator (SPG) has to be removed first. See procedure “Removal of the Start Pulse Generator”, page 64. Note that it is not necessary to disconnect the SPG module from the LPS unit. The SPG power cables are sufficient long to place the SPG module on top of the projector.

## Required tools

- 3mm Allen wrench.
- Cotton gloves.
- TX10 Torx screwdriver.

## How to replace the Cold Mirror?

1. Remove the complete Cold Mirror assembly from the projector chassis. Use a 3mm Allen wrench to loosen the 5 screws (reference 1) at the rear of the Cold Mirror assembly and the two screws (reference 2) at the top of the Cold Mirror assembly.

   *Note:* The exhaust system has to be removed to access the two screws at the top of the Cold Mirror assembly.

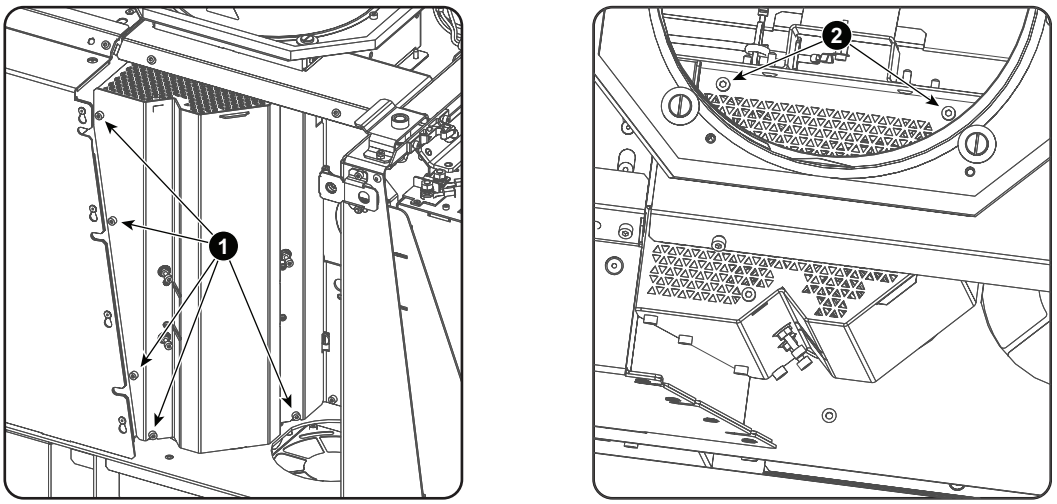


Image 8–2

2. Remove the Cold Mirror assembly from the projector.

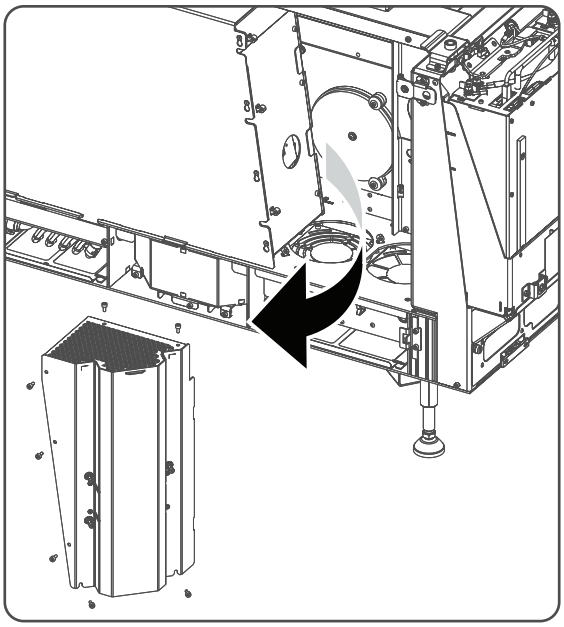

Image 8–3

3. Replace the Cold Mirror. Use a TX10 Torx screwdriver to loosen the four screws (reference 3) at the rear of the assembly as illustrated.

   *Caution:* Do not touch the surface of the Cold Mirror. Use cotton gloves to handle the Cold Mirror.

   *Caution:* Ensure that all packing material is removed from the new Cold Mirror.

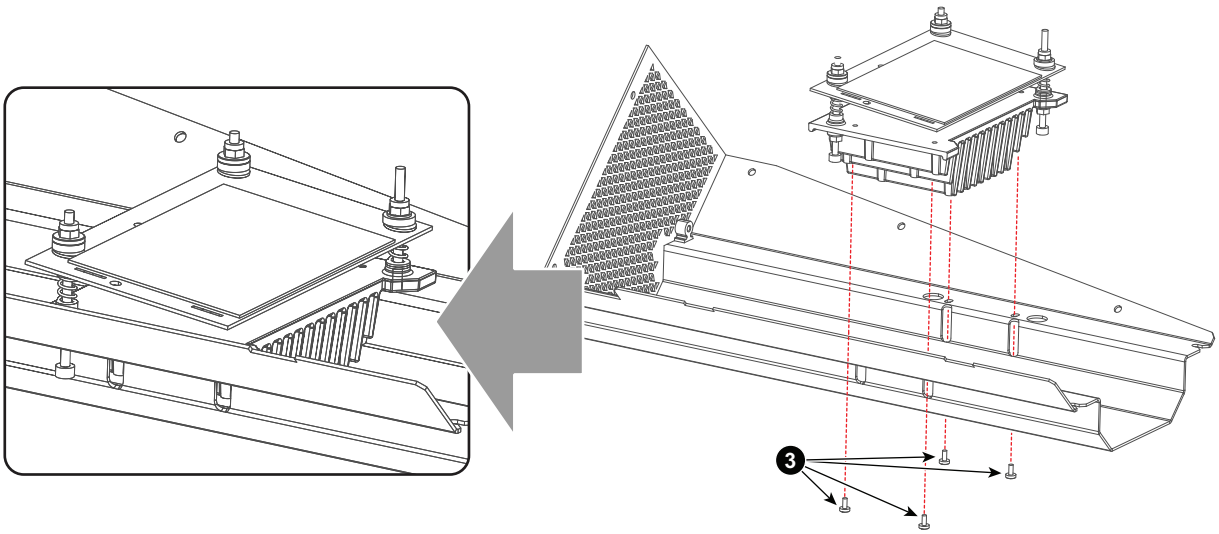


Image 8–4

4. Check the three adjustment screws at the rear side of the Cold Mirror assembly:
   - **Cold Mirror assembly of the first generation:**
     The adjustment screws should stick out 12 mm as illustrated. This position of the screws correspond with nearly an optimal position of the mirror.

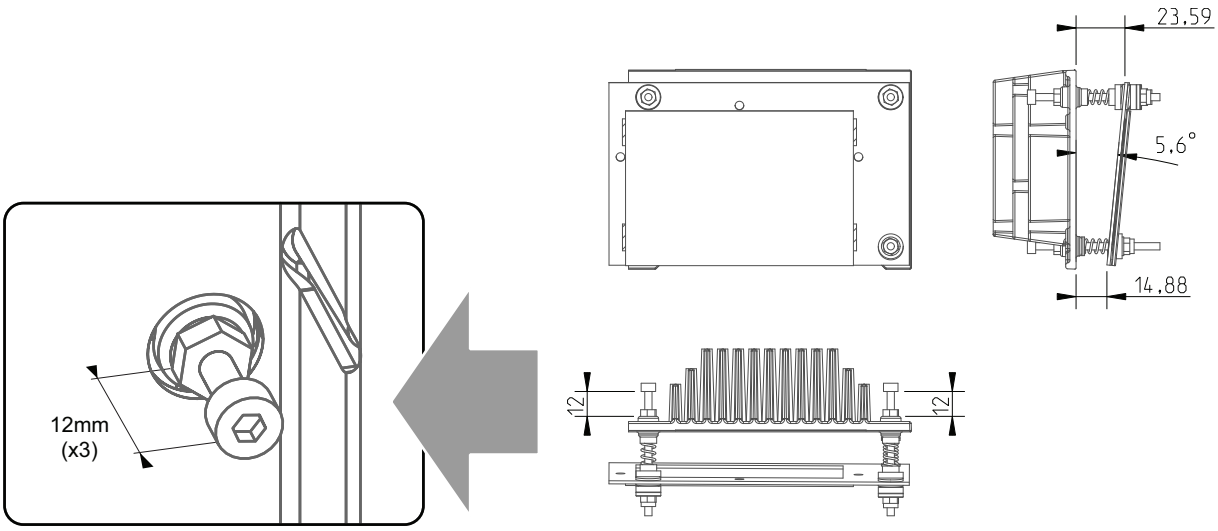


Image 8–5 Adjustment screws on the Cold Mirror assembly of the first generation (all distances in mm)

- **Cold Mirror assembly of the second generation:**
  The adjustment screws should stick out as illustrated. This position of the screws correspond with nearly an optimal position of the mirror.

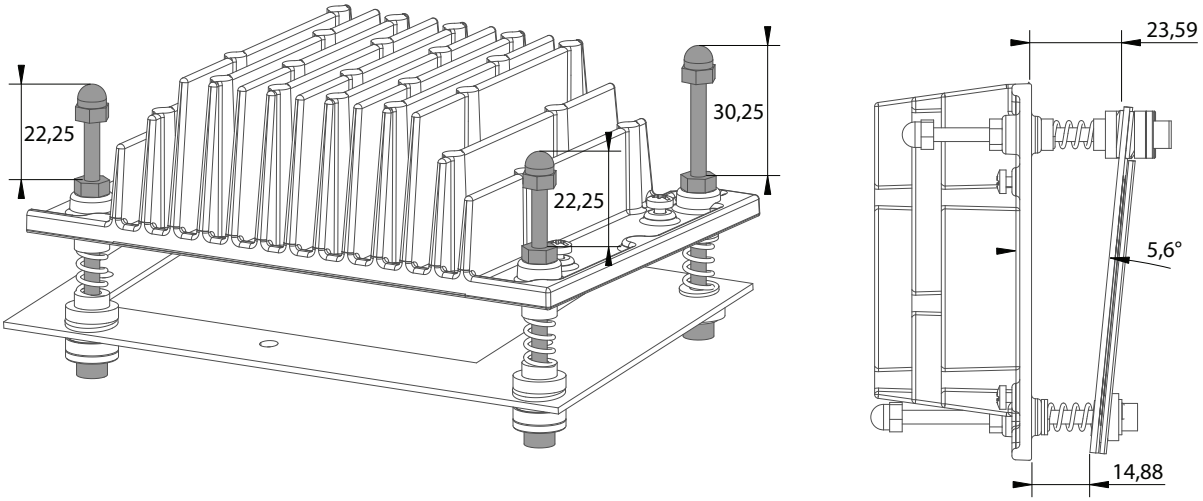


Image 8–6 Adjustment screws on the Cold Mirror assembly of the second generation (all distances in mm)

5. Install the Cold Mirror assembly in the projector. Use a 3mm Allen wrench to fasten the 5 screws (reference 1 Image 8–2) at the rear of the Cold Mirror assembly and the two screws (reference 2 Image 8–2) at the top of the Cold Mirror assembly.
6. Reinstall the Start Pulse Generator (SPG) unit. See procedure “Installation of the Start Pulse Generator”, page 66.
7. Reinstall the rear cover of the projector. (The left cover and the inner cover plate of the Cold Mirror/SPG compartment stay off because the Cold Mirror must remains accessible for adjustment)
8. Reinstall the mandatory exhaust system on top of the projector.
9. Check the Cold Mirror for dirt. If necessary clean the Cold Mirror. See procedure “Cleaning the Cold Mirror”, page 209.
10. Readjust the Cold Mirror. See procedure “Adjusting the Cold Mirror”, page 205.

# 8.3 Replace the Cold Mirror

## Required tools

- 7mm nut driver.
- 7mm open-end wrench.
- 3mm Allen wrench.
- Latex or cotton gloves.
- Slide caliper.

## How to replace a first generation Cold Mirror?

1. Check if the nuts (reference 11) at the rear side of the Cold Mirror assembly are tightened.
2. Loosen the three lock nuts (reference 1) at the front side of the Cold Mirror. Use a 7mm open-end wrench.
3. Remove the other small components (reference 2, 3, 4 & 10) and take off the Cold Mirror.
4. Install the new Cold Mirror. Ensure that all mounting parts (reference 1 to 10) upon the three rods are placed in that order as illustrated. Note that the number and type of mounting parts on the lower rod are slightly different than those on the upper two rods.

   ⚠ *Caution:* Do not touch the surface of the Cold Mirror. Use cotton gloves to handle the Cold Mirror.

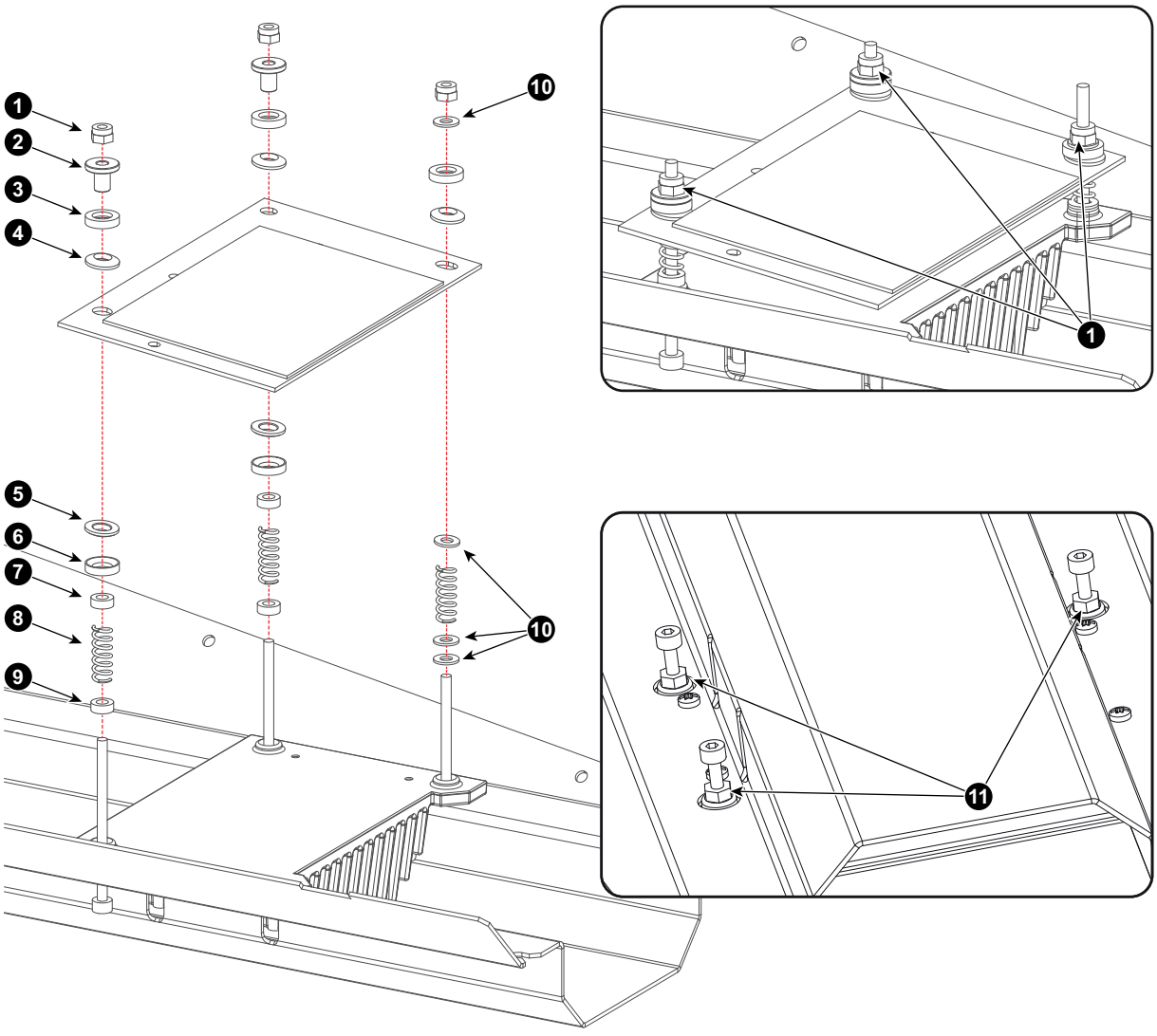


Image 8–7 Replacing a first generation Cold Mirror

5. Tighten the upper two lock nuts until the distance between the Cold Mirror and frame is 23.6mm. Tighten the lower lock nut until the distance between the Cold Mirror and the frame is 14.9mm. See illustration Image 8–8.

   *Note:* While tightening the lock nuts ensure that the three adjustment screws at the rear side of the Cold Mirror assembly stick out 12mm as illustrated. This position of the screws correspond with nearly an optimal position of the mirror.

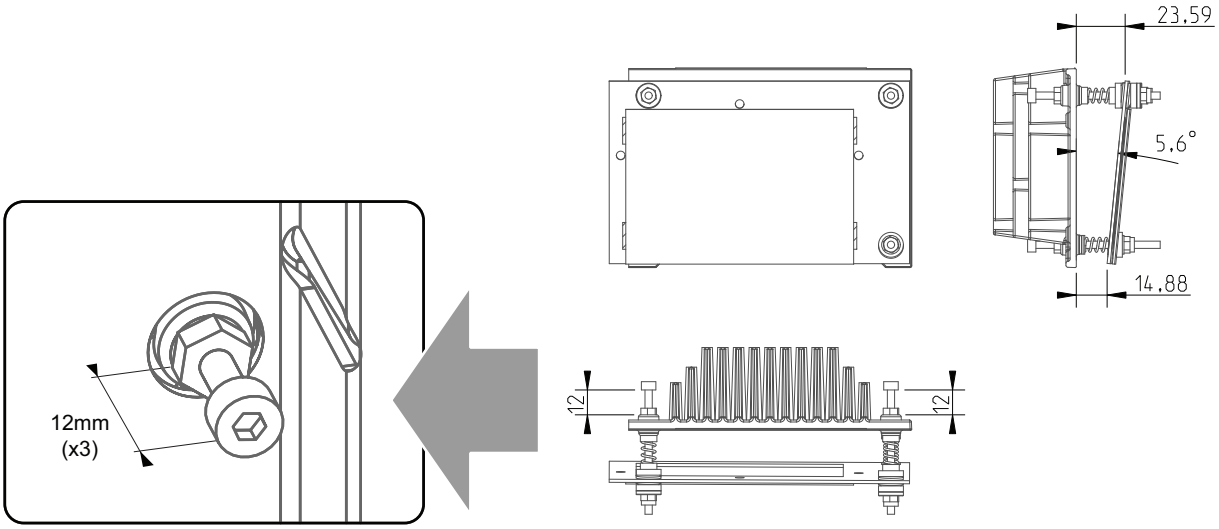


Image 8–8 Adjustment screws on the Cold Mirror assembly of the first generation (all distances in mm)

## How to replace a second generation Cold Mirror?

1. Remove the three nuts (reference 1) at the back side of the Cold Mirror. Use a 7mm open-end wrench to loosen the nuts and a 3mm Allen wrench to hold the screw on the front side of the Cold Mirror.

   *Note:* The nuts (reference 1) are applied to the screws with Loctite®. Some force may be needed to loosen the nuts.

2. Remove the three lock nuts (reference 2) at the back side of the Cold Mirror. Use a 7mm open-end wrench.

3. Remove the three long screws (reference 3) at the front side of the Cold Mirror. Use a 3mm Allen wrench.

4. Remove the small components (reference 4, 5, 6 & 7) from the long screws and take off the Cold Mirror.

5. Install the new Cold Mirror. Ensure that all mounting parts (reference 4 to 11) upon the three screws are placed in that order as illustrated. Note that the number and type of mounting parts on the lower screw are slightly different than those on the upper two screws.

   *Caution:* Do not touch the surface of the Cold Mirror. Use cotton gloves to handle the Cold Mirror.

6. Tighten the three long screws (reference 3) until the distance between the Cold Mirror and the frame is as illustrated.

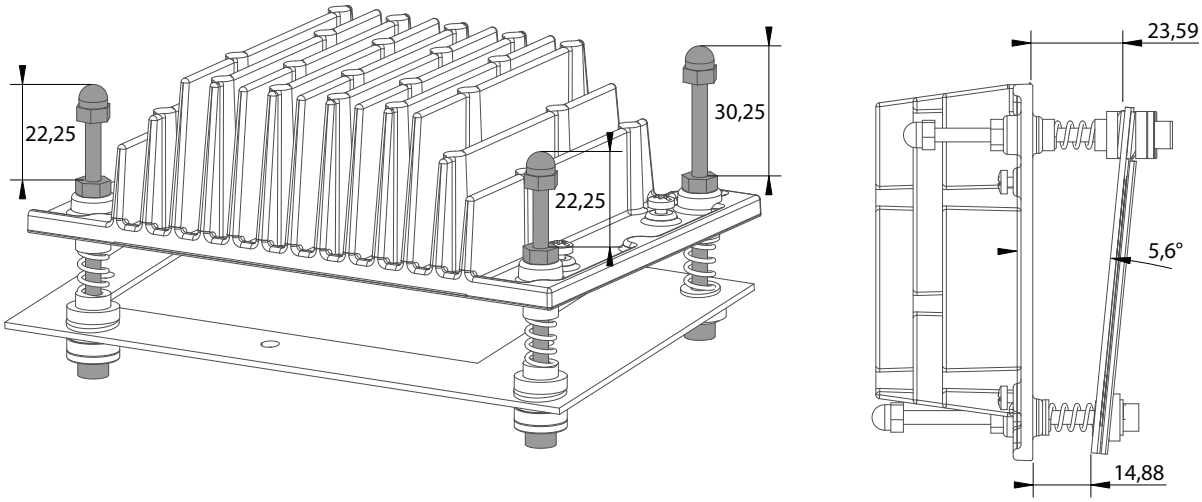


Image 8–9 Adjustment screws on the Cold Mirror assembly of the second generation (all distances in mm)

7. Place a lock nut (reference 2) and a cap nut (reference 1) at the end of each long screw (reference 3).

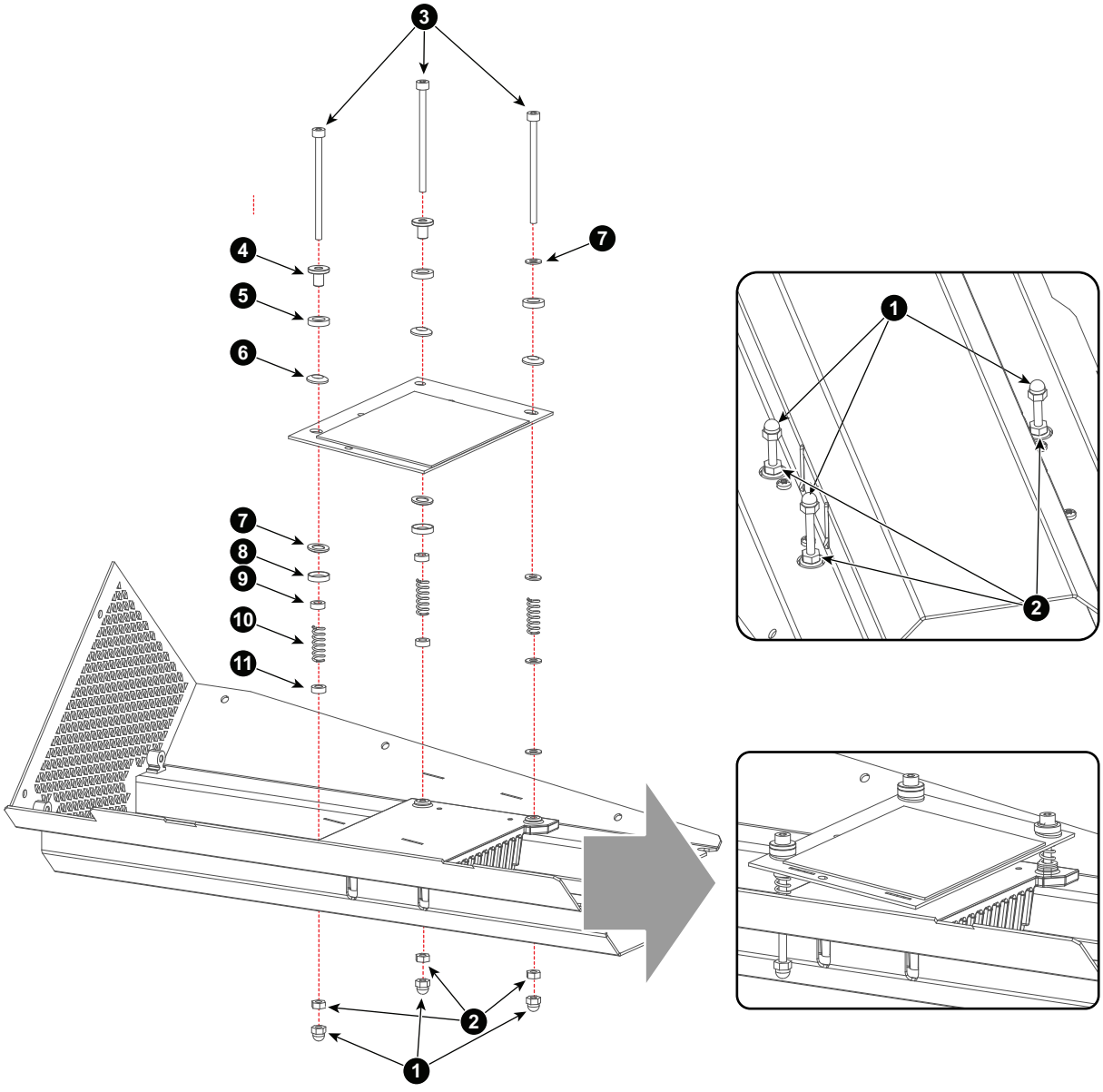


Image 8–10 Replacing a second generation Cold Mirror

# 8.4 Adjusting the Cold Mirror

## Important note!

The position of the xenon lamp in its Reflector effects the position of the Cold Mirror with respect to the entrance of the Integration Rod. Hence the adjustment of the Cold Mirror requires simultaneous adjustment of the xenon lamp in its Reflector for maximum light output. This procedure describes how to do so. However, if you are 100% sure that the xenon lamp is perfectly aligned in the Lamp House you can skip the adjustments on the Lamp House.

Adjust the Lamp House first in another projector, which Cold Mirror is correctly adjusted, or have it aligned by Barco before proceeding with the Cold Mirror adjustments. That way any Lamp House will be usable in that projector, or all others, and vise versa.

Once the Cold Mirror and xenon lamp are optimally adjusted, the Cold Mirror should never be adjusted again. A xenon lamp replacement only requires realignment of the xenon lamp in its Reflector. Only when the Cold Mirror or Reflector is replaced, should the Cold Mirror be readjusted.

To adjust the Cold Mirror the lamp cover, the left cover and the inner cover plate of the Cold Mirror/ SPG compartment has to be removed. This procedure assumes that these covers are already removed.

## Required tools

- 3mm Allen wrench.
- 7mm open-end wrench.
- Projected Light meter (Lux meter).
- Slide caliper.

## How to setup the projector for adjusting the Cold Mirror?

1. Remove, if not removed yet, the lamp cover, the left cover and the inner cover plate of the Cold Mirror/ SPG compartment.
2. Loosen the three lock nuts (reference 1) of the Cold Mirror adjustment screws (reference 2). Use for that a 7 mm open-end wrench.

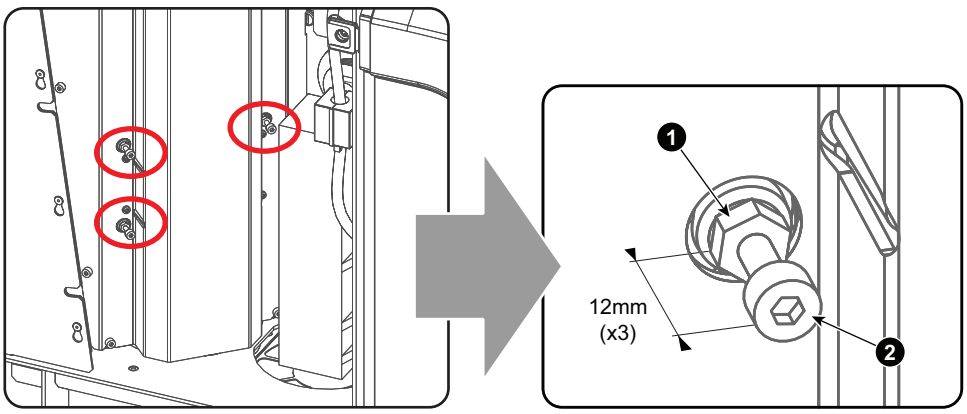


Image 8–11 Loosening the three lock nuts (first generation Cold Mirror)

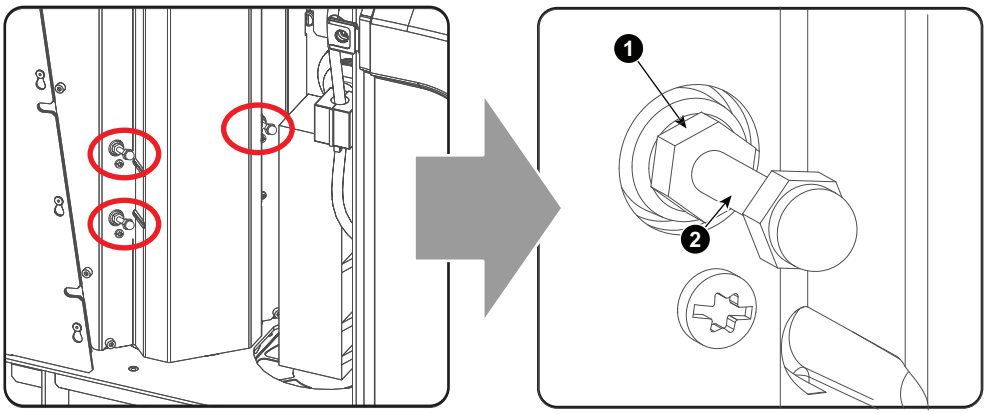


Image 8–12 Loosening the three lock nuts (first generation Cold Mirror)

3. Check the nominal position of the Cold Mirror and if required adjust.
   - **Cold Mirror assembly of the first generation:**
     The adjustment screws should stick out 12 mm as illustrated. This position of the screws correspond with nearly an optimal position of the mirror.

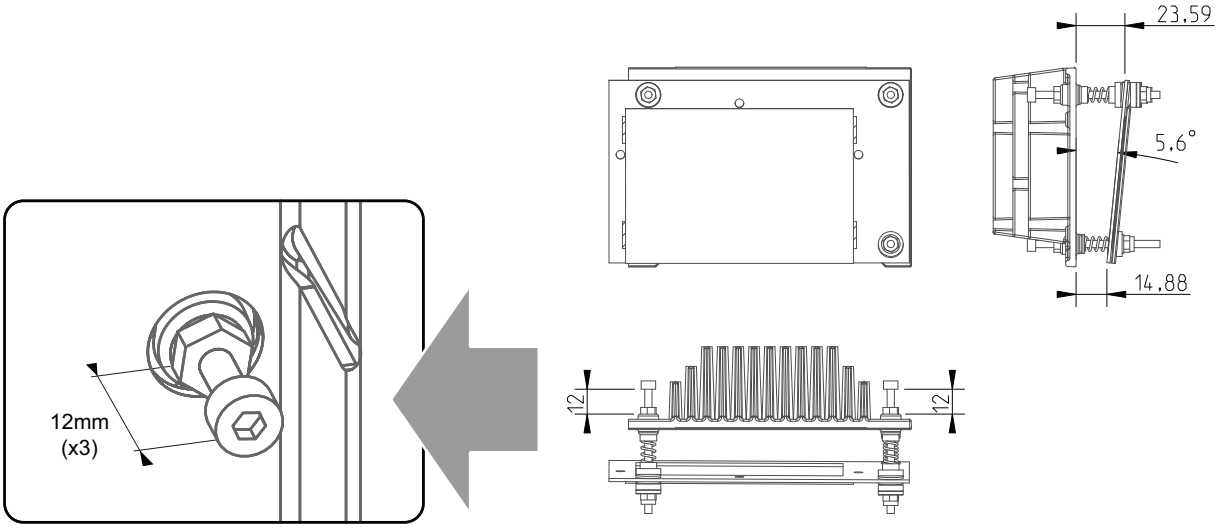


Image 8–13 Adjustment screws on the Cold Mirror assembly of the first generation (all distances in mm)

   - **Cold Mirror assembly of the second generation:**
     The adjustment screws should stick out as illustrated. This position of the screws correspond with nearly an optimal position of the mirror.

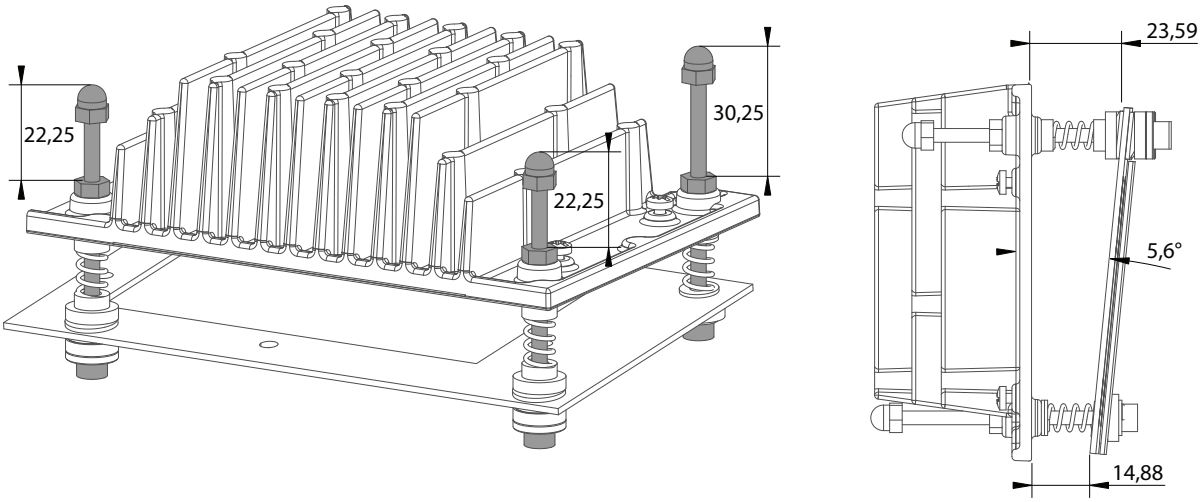


Image 8–14 Adjustment screws on the Cold Mirror assembly of the second generation (all distances in mm)

4. Project a white test pattern.

   *Tip:* Start the adjustment procedure with a dimmed xenon lamp.

5. Place the light meter in the center of the projected image.

## How to adjust the Cold Mirror?

1. Turn the adjustment screw 2 (reference 2) in or out until the maximum light output is measured. Use for that a 7 mm nut driver.

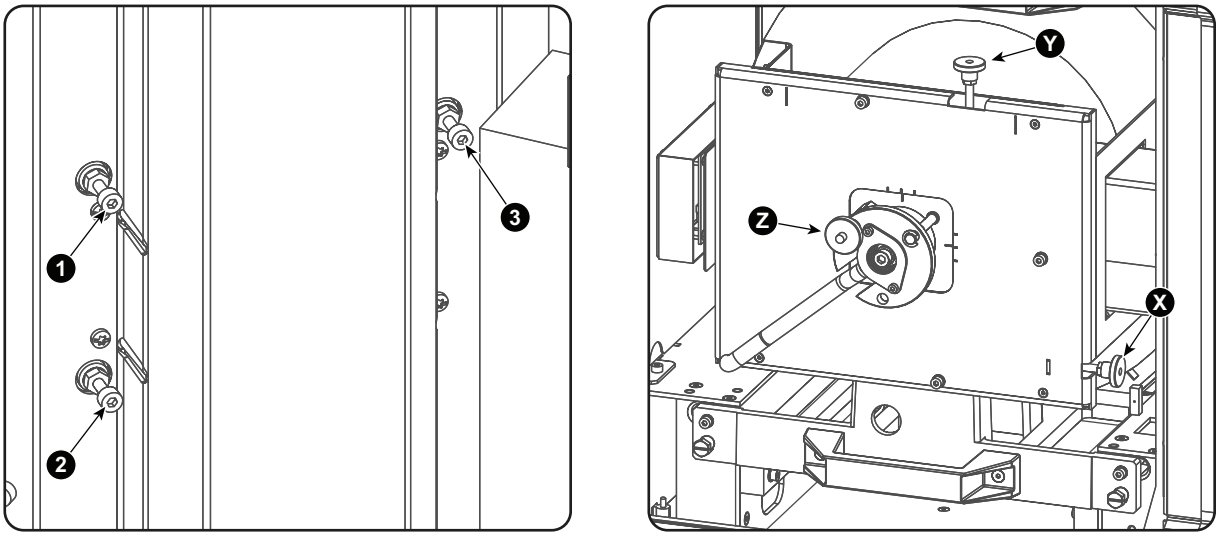


Image 8–15 Adjustment screws (first generation Cold Mirror)

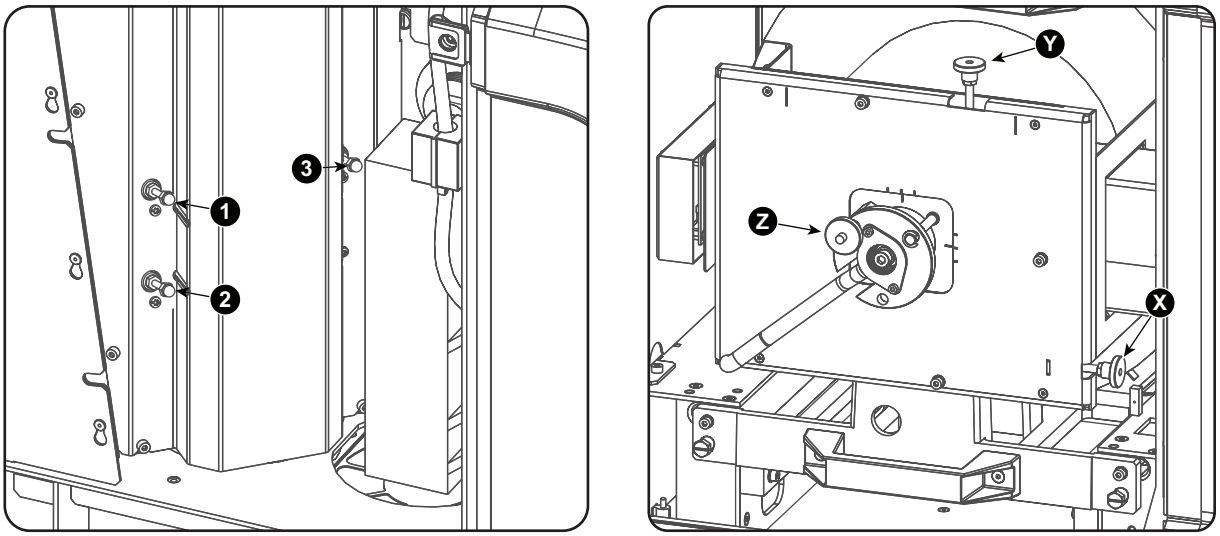


Image 8–16 Adjustment screws (second generation Cold Mirror)

2. Turn the adjustment screw 3 (reference 3) in or out until the maximum light output is measured.
3. Repeat step 1 and 2 until the maximum light output is measured.
4. Adjust the X-axis, Y-axis and Z-axis (reference X, Y & Z) of the xenon lamp in the Lamp House for maximum light output. Carefully turn the thumbscrew for maximum light output. Once over the maximum, turn slightly in opposite direction to reach the maximum light output again. Do this for each direction and minimum repeat this adjustment cycle twice.

   *Tip:* If you are 100% sure that the xenon lamp is perfectly aligned in the Lamp House you can skip the adjustments on the Lamp House. See “Important note!” above.

5. Turn the adjustment screw 1, 2 and 3 (reference 1, 2 & 3) equally in or out until the maximum light output is measured.

6. Repeat from step 1 until the maximum light output is measured.
7. Check the brightness uniformity. In most cases it will be OK.

   If not OK, turn slightly on the adjustment screws 2 and 3 (reference 2 & 3) until a uniform brightness is obtained.

   - Screw 2 (reference 2) will correct the difference between the left and the right side of the projected image.
   - Screw 3 (reference 3) will correct the difference between the top and the bottom side of the projected image.

   Check again and repeat if necessary.
8. When the adjustment is finished, secure the position of the Cold Mirror by turning the lock nuts (reference 1) against the plate (hold on the screws while securing the nuts).
9. Reinstall the inner cover plate of the SPG/Cold Mirror compartment. Use a 3mm Allen wrench to fasten the four hexagon socket head cap screws (reference 1) as illustrated.

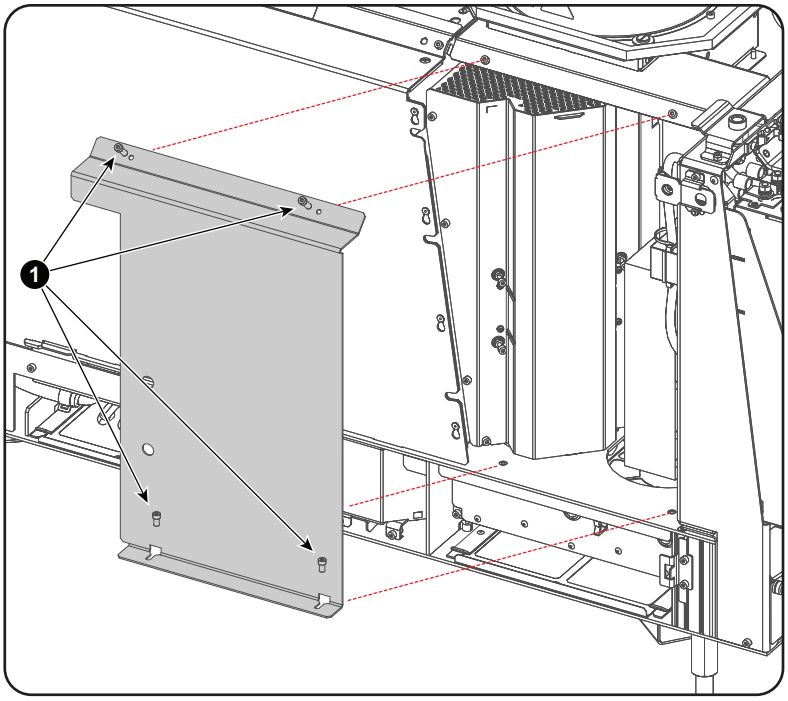


Image 8–17

10. Reinstall the lamp cover and the left cover of the projector.

# 8.5 Cleaning the Cold Mirror

## When cleaning the Cold Mirror?

Clean the Cold Mirror on a regular basis to maintain light output level.



This procedure requires that the Lamp House is removed from the projector.

## Required tools

- Compressed air.
- Clean Toraysee® cloth or any micro fiber lens cleaning cloth.
- Clean cotton cloth.

## Required parts

Lens cleaner (e.g. Carl Zeiss lens cleaner or Purasol® or any waterbased lens cleaner)

## How to clean the Cold Mirror?

1. Blow off dust with clean compressed air (or pressurized air cans).
2. Clean with lens cleaner together with a clean lens cleaning cloth to remove the dust and contamination. Use big wipes.
3. Use a dry lens cleaning cloth to remove left liquid or stripes. Polish with small circles.
4. If there are still fingerprints on the surface, wipe them off with lens cleaner together with a clean lens cleaning cloth. Polish again with a dry one.

# 9 Integration Rod


9.1 Introduction ..... 212
9.2 Integration Rod diagnostic (First generation Light Pipe) ..... 214
9.3 Integration Rod diagnostic (Second generation Light Pipe) ..... 215
9.4 Removal of the Integration Rod assembly (First generation Light Pipe) ..... 216
9.5 Installing a new Integration Rod assembly (First generation Light Pipe) ..... 217
9.6 Adjusting the Integration Rod (First generation Light Pipe) ..... 219
9.7 Adjusting the Integration Rod (Second generation Light Pipe) ..... 221


## About this chapter

This chapter describes briefly the functionality of the Integration Rod, how to diagnose the Integration Rod, how to replace the Integration Rod and how to adjust the Integration Rod.

# 9.1 Introduction

## Functionality of the Integration Rod

The Integration Rod is made of fused silica and is approximately 15 centimeter long. The cross-section of the rod has the same aspect ratio as the active surface of the DMD's used in the Light Processor. The function of the Integration Rod is to match the shape of the light path to the shape of the DMD's and to neutralize the hot spot effect caused by the light source. Furthermore, the Integration Rod ensures that the light beam is focused on the DMD's, which results in an optimally focused light beam on the screen.

The Integration Rod is located at the entrance of the Light Pipe. The light emitted by the light source is reflected via the Cold Mirror into the rod, which integrates the incoming light into a homogeneous rectangle shaped beam of light.

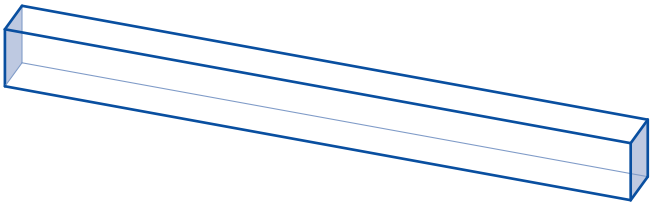

Image 9–1

The entrance and exit side of the Integration Rod are coated to achieve optimal performance. Clearly the rod may never be contaminated with grease, dirt, liquid or the such.

In the Light Pipe of the first generation the rod is mounted inside an aluminium tube, which requires replacing together with the rod. This aluminum tube also contains an adjustment mechanism to position the rod inside the Light Pipe. The Integration Rod, the aluminium tube and the adjustment mechanism together form the “Integration Rod assembly”.

In the Light Pipe of the second generation the rod is mounted directly inside the Light Pipe and is not field replaceable.

## Parts Integration Rod assembly of the first generation Light Pipe

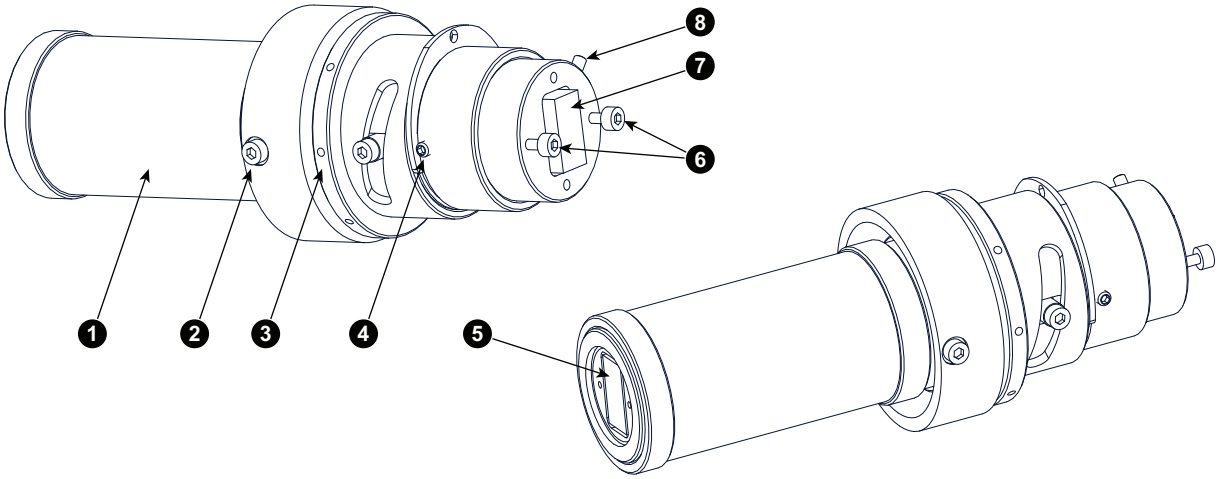


Image 9–2

1 Aluminium tube.
2 Fixation screw rod assembly.
3 Rod adjustment ring.
4 Set screw for rod focus adjustment.
5 Rod exit.
6 Fixation screws for cooling block.
7 Rod entrance.
8 Rod assembly positioning pin for cooling block.

## Integration Rod of the second generation Light Pipe

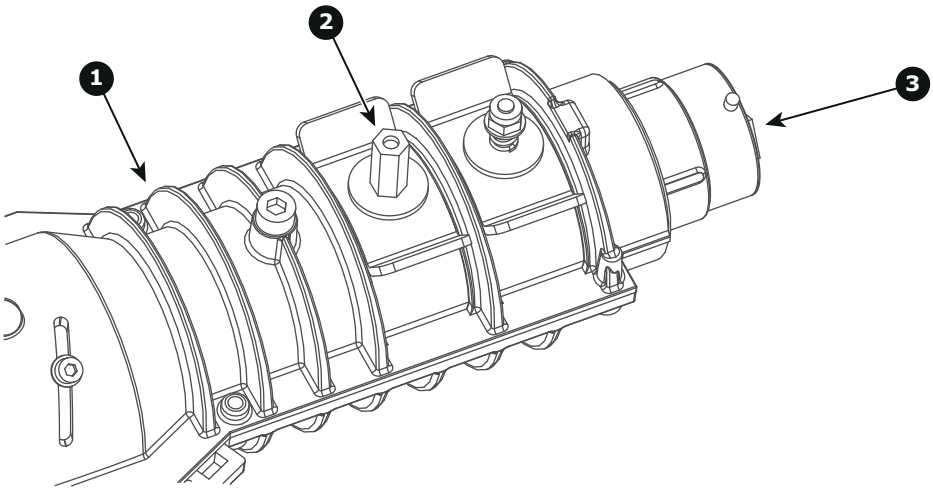


Image 9–3

1 ight Pipe housing (includes Rod housing).
2 Rod focus/rotation adjustment screw.
3 Rod entrance.

**CAUTION:** Never touch the entrance or exit of the Integration Rod assembly. Greasy fingerprints or other dirt on the Integration Rod entrance or exit will burn into the rod and cause permanent damage.

# 9.2 Integration Rod diagnostic (First generation Light Pipe)

## General

Due to bad environmental conditions the Integration Rod may become contaminated with grease, dust, dirt or other particles, which will burn into the rod and cause permanent damage. As a result spots may become visible in the projected image on the screen. To confirm that these spots are caused by a damages to the rod please diagnose the rod as described in the following procedure.

## Required tools

- 7 mm flat screw driver.
- 2 mm Allen wrench.

## How to diagnose the Integration Rod of the projector?

1. Remove the side cover of the projector.
2. Switch on the projector and project a white test pattern. See users manual of the projector to do so. Make sure that the projected white test pattern is focused.
3. Loosen the two set screws (reference 1 Image 9–4) a few turns. Use a 2 mm Allen wrench. It's not necessary to remove the set screws.

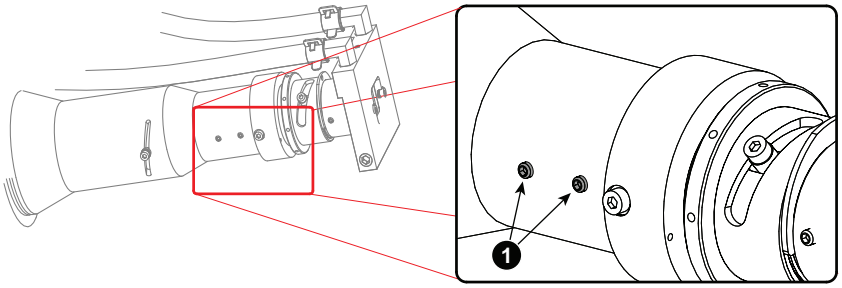


Image 9–4

4. Gently rotate the adjustment ring (reference 2 Image 9–5) of the Integration Rod assembly back and forward while watching the projected image.

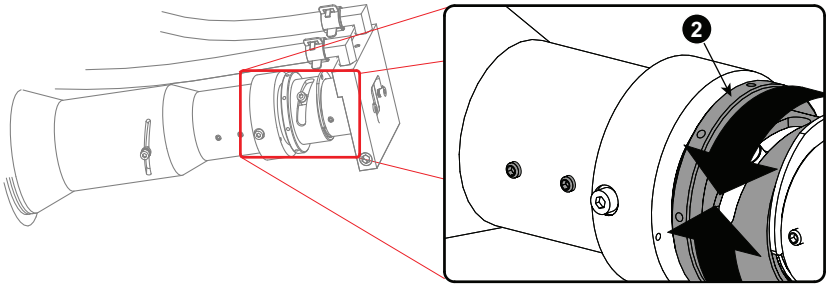


Image 9–5

5. Do you see spots in the projected image rotate along with the movements of the rod?
   ► If yes, these spots are caused by damages to the Integration Rod. Replace the rod assembly.
   ► If no, Integration Rod is OK. Re-adjust and secure the Integration Rod and reinstall the side cover of the projector.

# 9.3 Integration Rod diagnostic (Second generation Light Pipe)

## General

Due to bad environmental conditions the Integration Rod may become contaminated with grease, dust, dirt or other particles, which will burn into the rod and cause permanent damage. As a result spots may become visible in the projected image on the screen. To confirm that these spots are caused by a damages to the rod please diagnose the rod as described in the following procedure.

## Required tools

7mm nut driver.

## How to diagnose the Integration Rod of the projector?

1. Remove the side cover of the projector.
2. Switch on the projector and project a white test pattern. See users manual of the projector to do so. Make sure that the projected white test pattern is focused.
3. Loosen the Rod adjustment screw (reference 2 Image 9–6) .
4. Gently rotate the Integration Rod by moving the Rod adjustment screw to and fro while watching the projected image.

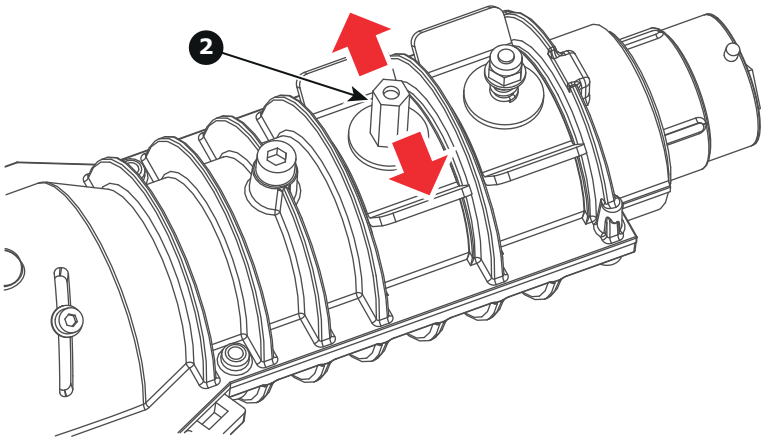


Image 9–6

5. Do you see spots in the projected image rotate along with the movements of the rod?
   ► If yes, these spots are caused by damages to the Integration Rod. The Integration Rod has to be replaced at factory.
   ► If no, Integration Rod is OK. Re-adjust and secure the Integration Rod and reinstall the side cover of the projector.

# 9.4 Removal of the Integration Rod assembly (First generation Light Pipe)

To remove the Integration Rod assembly from the Light Pipe the Light Processor unit has to be removed from the projector first. This procedure assumes that the Light Processor is already removed from the projector.

**CAUTION:** All servicing to the Light Processor unit has to be done in a dust free area. Use compressed air to blow away all dust on the outside of the Light Processor unit before entering the unit into the dust free area.

## Required tools

- Compressed air.
- 2 mm Allen wrench.
- 2,5 mm Allen wrench.

## How to remove the integration rod from the light pipe?

1. Remove the cooling block at the Light Pipe entrance by releasing the two socket head cap screws (reference 1 Image 9–7) as illustrated. Use a 2,5 mm Allen wrench.

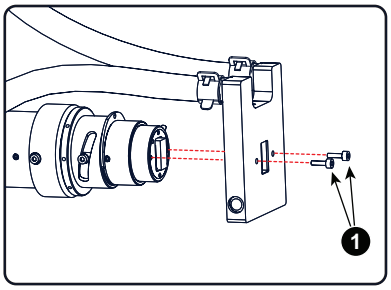


Image 9–7

2. Loosen the two set screws (reference 2) a few turns. Use a 2 mm Allen key. It's not necessary to remove the set screws.
3. Remove the socket head cap screw (reference 3) as illustrated. Use a 2,5 mm Allen wrench.

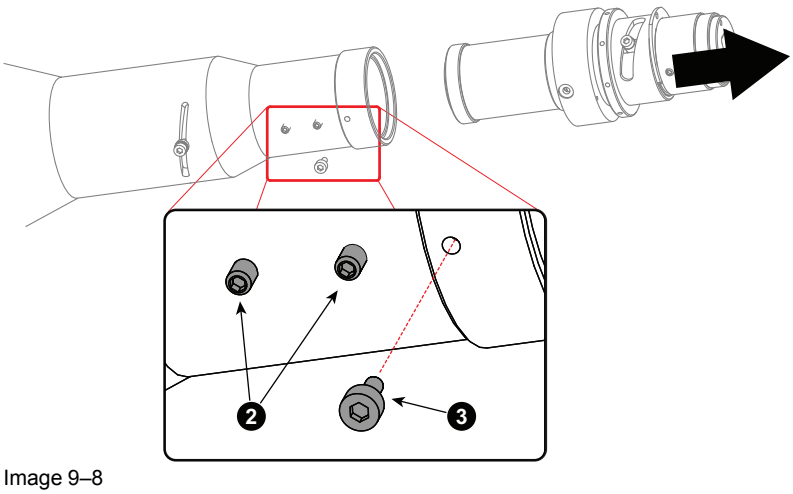


Image 9–8

4. Pull the Integration Rod assembly out of the light pipe.

Do not keep the Light Pipe entrance open (no Integration Rod installed) for a long period. This to prevent dust intrusion.

# 9.5 Installing a new Integration Rod assembly (First generation Light Pipe)

## Required tools

- Compressed air.
- 2 mm Allen wrench.
- 2,5 mm Allen wrench.

## Required parts

Integration rod assembly.

## How to install a new Integration Rod assembly?

1. Check if there are no dust particles present on the exit side of the Integration Rod assembly. If necessary remove the dust with compressed air.

   *Caution:* Never touch the entrance or exit side of the integration rod assembly.

   *Note:* The exit side of the rod is much more critical than the entrance side of the rod.

2. Check if the inner side of the Light Pipe entrance is dust free. If necessary remove the dust with compressed air.
3. Gently slide the Integration Rod into the light pipe as illustrated in Image 9–9.
4. Secure the Integration Rod with a hexagon socket head cap screw (reference 1 Image 9–9). Use a 2,5 mm Allen wrench.

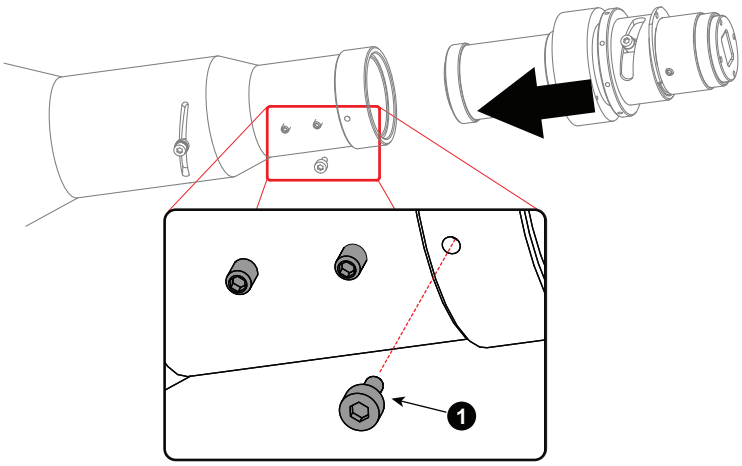


Image 9–9

5. Rotate the Integration Rod until the set screws (reference 2 Image 9–10) of the Light Pipe are aligned with the set screw (reference 3 Image 9–10) of the Integration Rod assembly as illustrated.

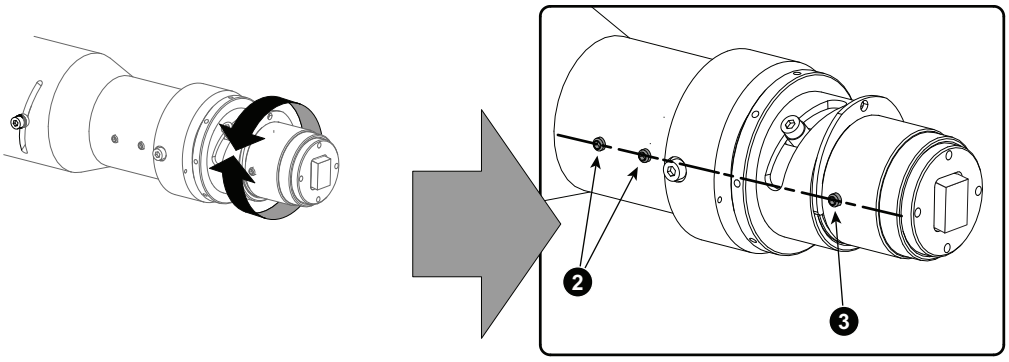


Image 9–10

6. Fasten the set screws (reference 2 Image 9–11). Use a 2 mm Allen wrench.

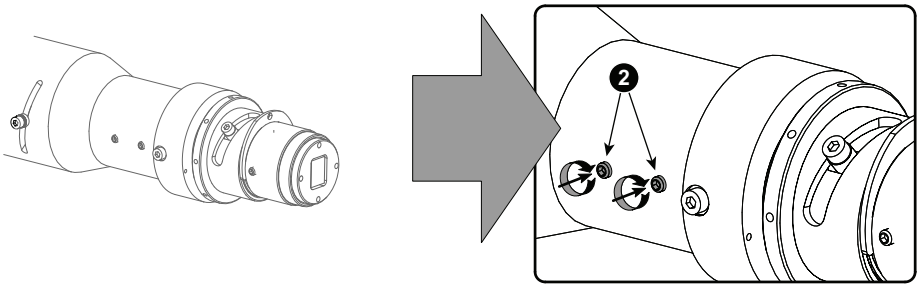


Image 9–11

7. Install the cooling block with two hexagon screws (reference 4 Image 9–12) as illustrated. Use a 2,5 mm Allen wrench.

*Caution:* Align the positioning pin (reference 5 Image 9–12) of the Integration Rod with its corresponding slot on the cooling block while approaching the Integration Rod.

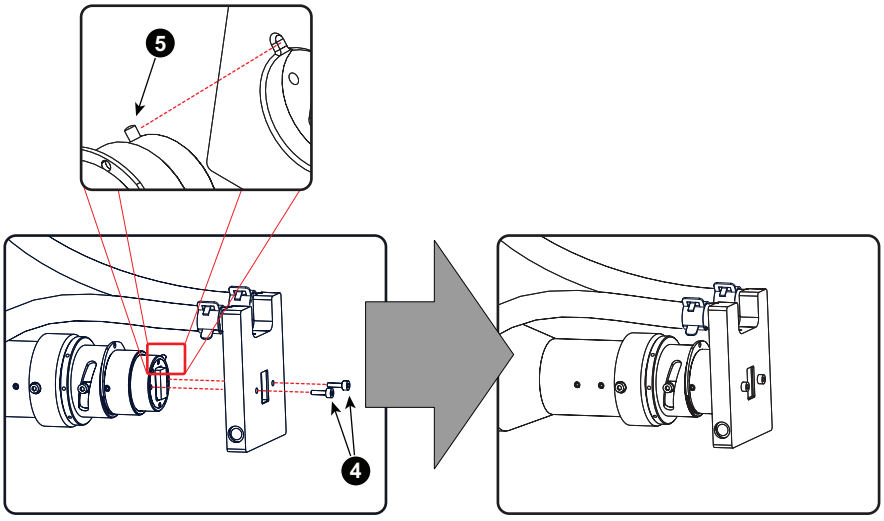


Image 9–12

The Integration Rod must be adjusted after installation.

# 9.6 Adjusting the Integration Rod (First generation Light Pipe)

To adjust the Integration Rod you have to remove the side cover (Light Processor side) first.

## Required tools

2 mm Allen wrench.

## How to adjust the Integration Rod of the projector?

1. Check if the rod rotation set screws (reference 1 Image 9–13) and the rod focus set screw (reference 2 Image 9–13) are aligned. If not see procedure “Installing a new Integration Rod assembly (First generation Light Pipe)”, page 217, to align the set screws.

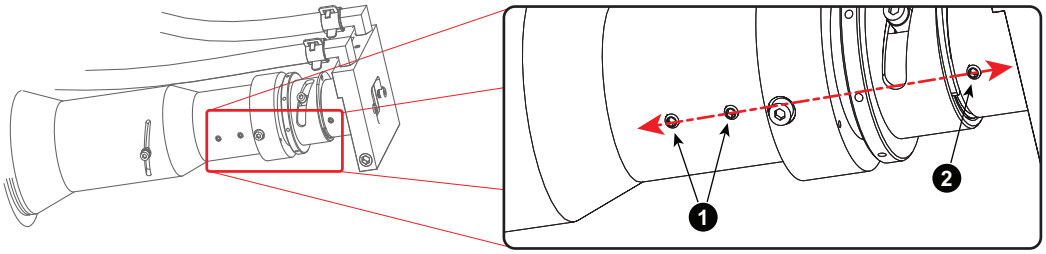


Image 9–13

2. Loosen the rod focus set screw (reference 2 Image 9–14). Use a 2 mm Allen wrench.

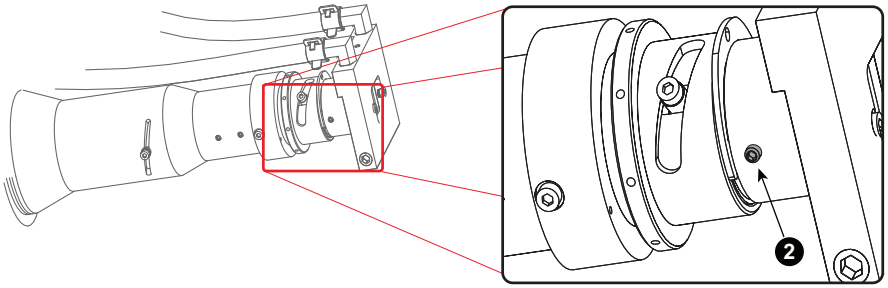


Image 9–14

3. Start up the projector but do not activate the light source yet.
4. Set up the projector using the Communicator software to display a white internal pattern with a maximum contrast and a maximum dimming. Do not activate the light source yet.
   1. Switch on the projector. Do not activate the light source yet.
   2. Select : `Control Service` > `Light output mode` > `Normal mode` > `Lamp dimming` > `0`
   3. Select : `Control` > `Test patterns` > `Full white`
   4. Make sure that you have a 2 mm Allen wrench within reach for the next steps.

   *Caution:* Maximum ten (10) seconds are allowed of minimum light output on a non-adjusted Integration Rod. Otherwise, the DMD's may be damaged.

5. Activate the light source and zoom the projector lens in or out until the projected image is focused.

   *Note:* Dialog windows must be displayed sharp instead of blurry. This is independent of the focus of the light beam.

6. Gently rotate the rod adjustment ring (reference 3 Image 9–15) back or forward to a position which projects the sharpest possible edges on the screen.

   *Tip:* Place a 2 mm Allen wrench in one of the holes on the outer side of the adjustment ring. The Allen wrench function as an extension bar of the adjustment ring. This allows a more precise adjustment.

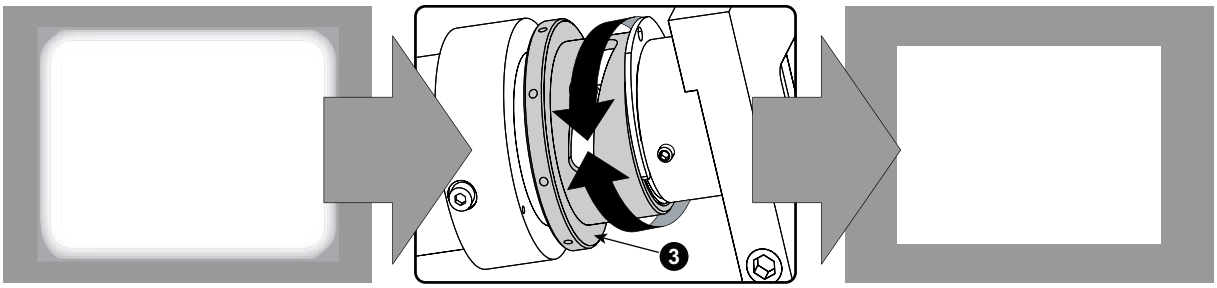


Image 9–15

7. Fasten the rod focus set screw (reference 2 Image 9–14) which you released in step 2.
8. Loosen the two rod rotation set screws (reference 1 Image 9–16) as illustrated. Use a 2 mm Allen wrench.

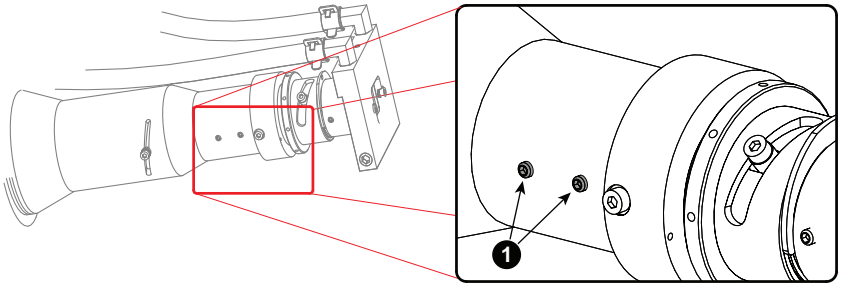


Image 9–16

9. Gently rotate the rod adjustment ring (reference 3 Image 9–17) until the projected light beam matches the projected outline of the DMD's.

   *Note:* No spots in the projected image may move along with the movements of the Integration Rod. Spots which move with the movements of the Integration Rod indicates that the exit side of the Integration Rod is contaminated with dust. If this is the case, remove the Integration Rod and try to blow away the dust. If this doesn't help replace the Integration Rod.

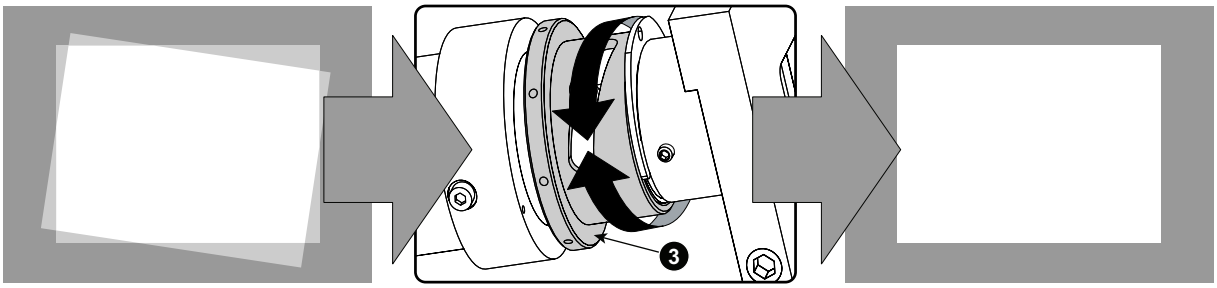


Image 9–17

10. Fasten the two rod rotation set screws (reference 1 Image 9–16) which you released in step 8 and reinstall the projector side cover.

When you are familiar with this adjustment procedure you can optimize the focus position of the Integration Rod by first rotate the Integration Rod until you clearly see the sloped edges on the screen and then focusing these edges as sharp as possible. Then rotate the Integration Rod back until the projected light beam matches the projected outline of the DMD's. This way of focusing the Integration Rod has to be done quickly. Otherwise, the sealing between the DMD's and the prism will be damaged.

# 9.7 Adjusting the Integration Rod (Second generation Light Pipe)

**CAUTION:** Only qualified and authorized personnel may perform this procedure.

To adjust the Integration Rod you have to remove the side cover (Light Processor side) first.

## Required tools

7mm nut driver.

## How to adjust the Integration Rod of the projector?

1. Loosen the Rod adjustment screw (reference 2 Image 9–18). Use a 7mm nut driver.
2. Start up the projector but do not activate the light source yet.
3. Set up the projector using the Communicator software to display a **full white internal pattern** with a maximum contrast and a **maximum dimming**.
   1. Select : `Control Service` > `Light output mode` > `Normal mode` > `Lamp dimming` > `0`
   2. Select : `Control` > `Test patterns` > `Full white`

   Do not activate the light source yet. Make sure that you have a 7mm nut driver within reach for the next steps.

   *Caution:* Maximum ten (10) seconds are allowed of minimum light output on a non-adjusted Integration Rod. Otherwise, the DMD's may be damaged.
4. Activate the light source and zoom the projector lens in or out until the projected image is focused.

   *Note:* Dialog windows must be displayed sharp instead of blurry. This is independent of the focus of the light beam.
5. Gently move the Rod adjustment screw (reference 2 Image 9–18) of the Integration Rod **LEFT** or **RIGHT** into a position which projects the sharpest possible edges on the screen (**FOCUS**). Use a 7mm nut driver as an extension bar of the Rod adjustment screw. This allows a more precise adjustment.

   *Warning:* The Rod adjustment screw of the Integration Rod is hot. To prevent burn injuries use 7mm nut driver for moving the Integration Rod.

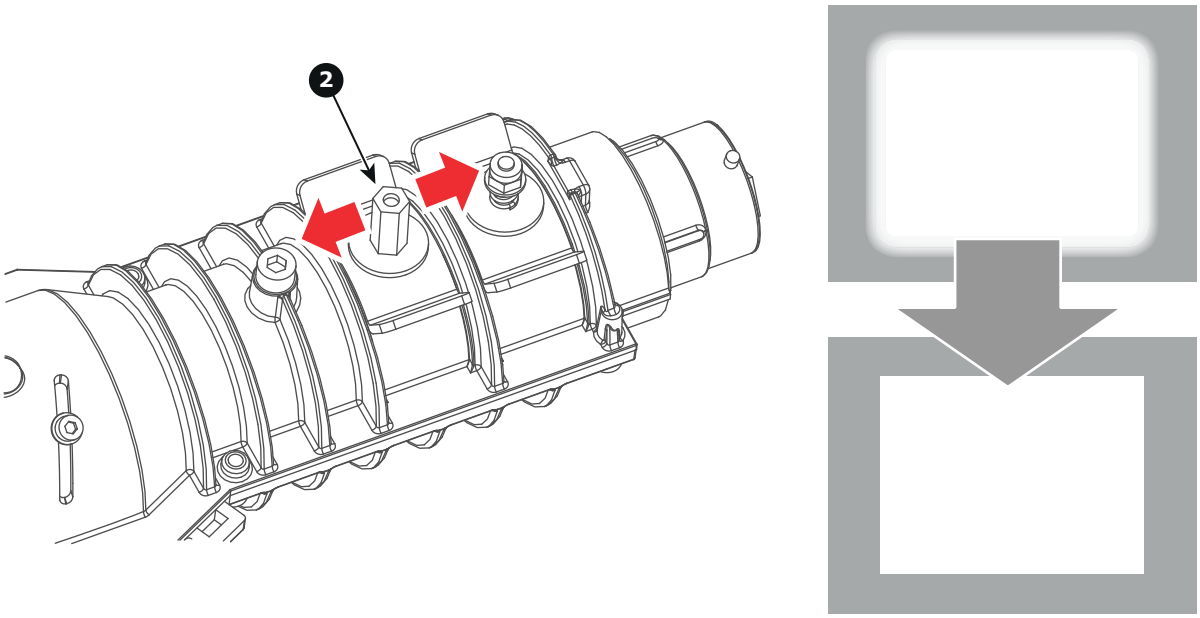


Image 9–18

6. Gently move the Rod adjustment screw (reference 2 Image 9–19) of the Integration Rod **UP** or **DOWN** until the projected light beam matches the projected outline of the DMD's (**ROTATION**). Use a 7mm nut driver as an extension bar of the Rod adjustment screw. This allows a more precise adjustment.

   *Warning:* The Rod adjustment screw of the Integration Rod is hot. To prevent burn injuries use 7mm nut driver for moving the Integration Rod.

   *Note:* No spots in the projected image may move along with the movements of the Integration Rod. Spots which move with the movements of the Integration Rod indicates that the exit side of the Integration Rod is contaminated with dust. If this is the case, remove the small rectangle cover at the middle of the Light Pipe (Integration Rod exit) and try to blow away the dust. If this doesn't help the Integration Rod has to be replace at factory.

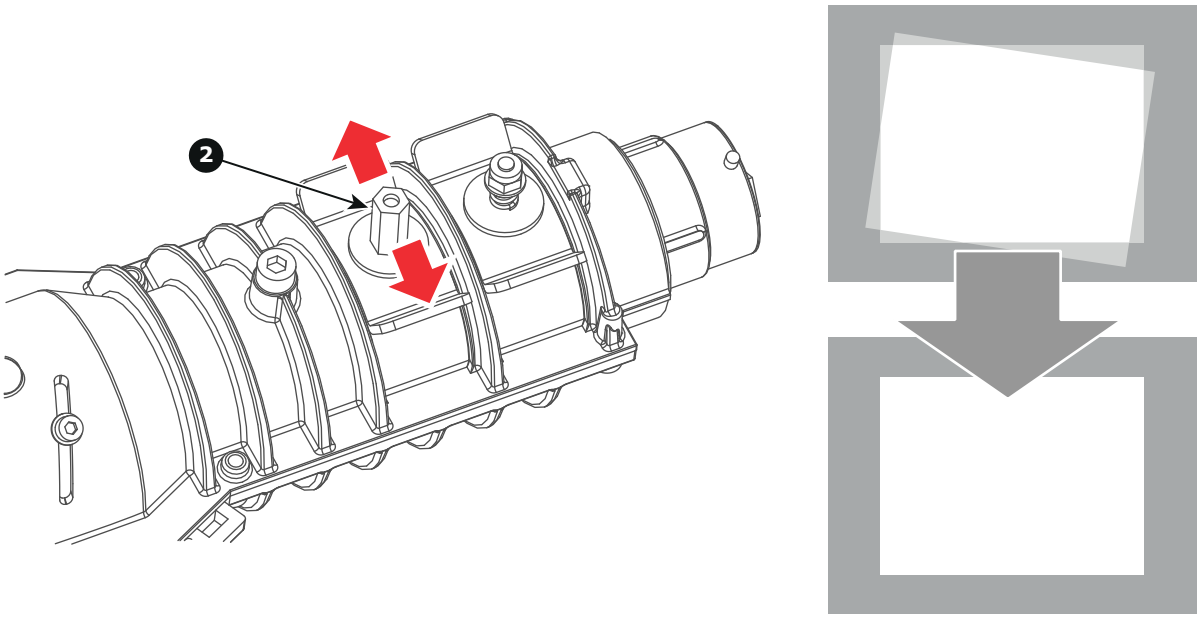


Image 9–19

7. Fasten the Rod adjustment screw (reference 2 Image 9–19) which you released in step 1. Use a 7mm nut driver.

8. Reinstall the projector side cover.

When you are familiar with this adjustment procedure you can optimize the focus position of the Integration Rod by first rotate the Integration Rod until you clearly see the sloped edges on the screen and then focusing these edges as sharp as possible. Then rotate the Integration Rod back until the projected light beam matches the projected outline of the DMD's. This way of focusing the Integration Rod has to be done quickly. Otherwise, the sealing between the DMD's and the prism will be damaged.

# Sealed Light Processor assembly 10


10.1 Introduction ..... 227
10.2 Diagnostics ..... 230
10.3 Open the sealed compartment ..... 231
10.4 Remove light processor top cover ..... 233
10.5 Electrical disconnection ..... 234
10.6 Light processor assembly removal ..... 236
10.7 4K Lens and Aperture replacement (Second generation Light Pipe) ..... 239
10.8 Installation of the light processor assembly ..... 242
10.9 Electrical connections ..... 246
10.10 Input and Communication top cover ..... 248
10.11 Convergence controls ..... 249
10.12 Red on blue convergence ..... 251
10.13 Green on blue convergence ..... 252
10.14 Mount light processor top cover ..... 253
10.15 Close the sealed compartment ..... 254
10.16 Adjusting the Fold Mirror (First generation Light Pipe) ..... 255
10.17 Adjusting the Fold Mirror (Second generation Light Pipe) ..... 257
10.18 Adjusting the Light Pipe Zoom Lens (First generation Light Pipe) ..... 259
10.19 Adjusting the Light Pipe Zoom Lens (Second generation Light Pipe) ..... 260
10.20 Adjusting the Notch Filter (First generation Light Pipe) ..... 261
10.21 Adjusting the Notch Filter (Second generation Light Pipe) ..... 263
10.22 Cleaning the Notch Filter ..... 265
10.23 Cleaning the Prism exit side ..... 266
10.24 Replacement of the Light Sensor Module (First generation Light Pipe) ..... 267
10.25 Replacement of the Light Sensor Module (Second generation Light Pipe) ..... 268
10.26 Replacement of the Notch Filter (First generation Light Pipe) ..... 269
10.27 Replacement of the Notch Filter (Second generation Light Pipe) ..... 271
10.28 Replacement of the Dowser (Shutter) ..... 272


## About this chapter

This chapter gives a brief introduction of the Sealed Light Processor assembly. Futhermore, this chapter includes the replacement procedure of the whole Light Processor or sub assemblies e.g. Shutter, Light Sensor module and notch filter. The convergence adjustment procedure is also included in this chapter. Note that the service information about the Integration Rod and the Liquid Cooling Circuit are grouped in a separate chapters in this manual, see chapters “Integration Rod”, page 211, and “Liquid Cooling Circuit”, page 281.

**WARNING:** The procedures below may only be performed by Barco trained and qualified technicians.

**WARNING:** Disconnect the power to the projector mains terminals and unplug the power cord at UPS INLET for removal of all power from the projector.

**CAUTION:** Wear a wrist band which is connected to the ground while handling the electrostatic discharge sensitive parts.

**CAUTION:** Remove the light processor of the projector only in a clean and dust free area. Never remove the side cover in an area which is subject to airborne contaminants such as that produced by smoke machines or similar.

**CAUTION:** Remove the projector lens before removing the Light Processor.

When replacing the Light Processor in a DP4K P series projector the Spacial Color Calibration file must be reloaded and activated. See chapter “Spatial Color Calibration (LUT-SCC)”, page 273.

# 10.1 Introduction

## Light Processor assembly

The light processor assembly has two major sub assemblies, namely: the Light Processor Unit (reference 1) with dowser (reference 2) and the Light Pipe assembly (reference 3).

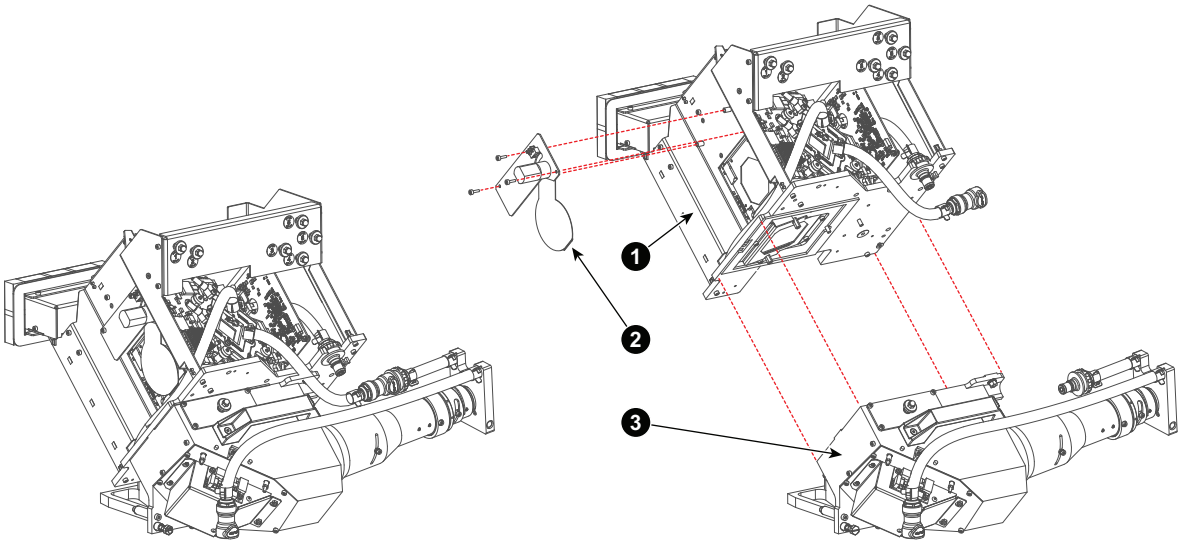


Image 10–1

1 Light Processor Unit.
2 Dowser (Shutter).
3 Light Pipe.

## Light Pipe (first generation)

The Light Pipe transforms the light emitted by the light source into a homogeneous light beam and focuses this beam precisely on the active surface of the DMD's. The Light Pipe contains the Integration Rod at the Light Pipe entrance, the Light Pipe zoom lens which matches the size of the light beam with the size of the DMD's, the Folding Mirror which folding up the light path of the projector to make the projector more compact, and the Light Sensor Module which ensures a Constant Light Output (CLO) of the projector. Furthermore, the Light Pipe has a Notch filter on the exit which applies some small color corrections on the light coming out of the Light Pipe.

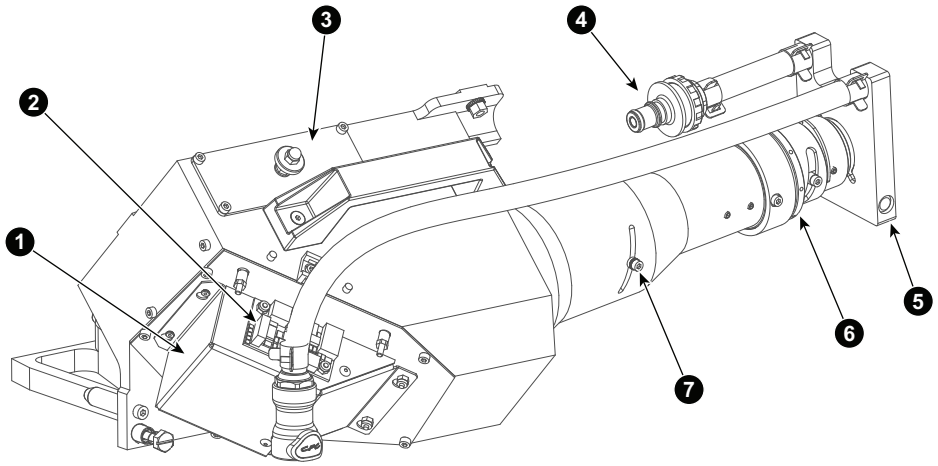


Image 10–2

1 Cover Folding Mirror.
2 Light Sensor module.
3 Notch Filter.
4 Liquid Cooling Circuit Light Pipe.
5 Cooling block Rod entrance.
6 Integration Rod assembly.
7 Adjustment handle of the Light Pipe Zoom Lens.

## Light Pipe (second generation)

The second generation Light Pipe used on the DP2K and DP4K B series contains the same adjustment functionalities as the first generation. However, some adjustment procedures may be slightly different. The housing of the second generation Light Pipe is different compared with the first generation Light Pipe.

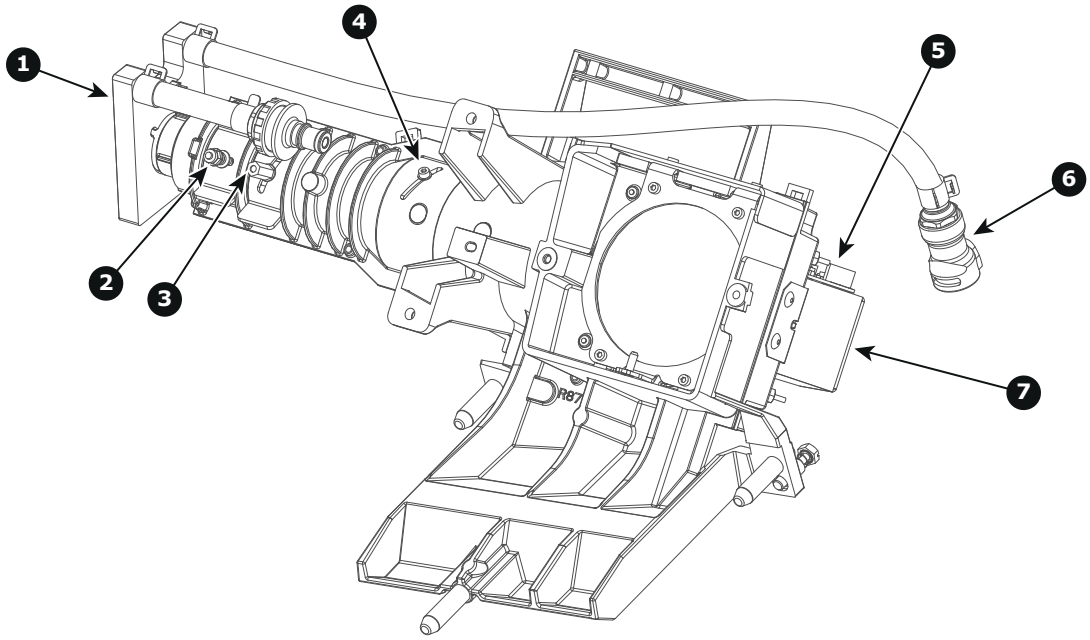


Image 10–3

1 Cooling block Rod entrance.
2 Adjustment Rod rotation.
3 Adjustment Rod focus.
4 Adjustment handle of the Light Pipe Zoom Lens.
5 Light Sensor module.
6 Liquid Cooling Circuit Light Pipe.
7 Cover Folding Mirror.

## Light Processor

The Light Processor is the heart of the projector. The prism of the Light Processor splits up the homogeneous white light coming from the Light Pipe into red, green and blue light. The video information on the three DMD's is integrated with these red green and blue light beams. The prism merges the three integrated light beams back in to one full color video image, which is projected via the lens onto the screen.

Each DMD has its own formatting board which drives the micro mirrors to integrate the video signal into the light beam. A lot of heat is produced during the integration of the video information. To protect the DMD's for overheating the Light Processor is equipped with a liquid cooling circuit. Each channel has its own cooling block. To improve the heat extraction a Peltier element is mounted between the rear side of the DMD and its cooling block. Note that the cooling circuit of the Light Processor includes a cooling block for the Light Pipe entrance.

The Light Processor is equipped with 7 temperature sensors. Each channel has one temperature sensor at the front of the DMD and one on its cooling block. The cooling block for the Light Pipe entrance has also one temperature sensor. These temperature sensors helps to drive the Peltier elements and to protect the Light Processor for overheating.

The red and green channel are equipped with three extended adjustment knobs to convergence the DMD with the DMD of the blue channel which is the reference channel for convergence alignment.

The air gab between the prism and DMD is sealed to protect the DMD's for dust. It is important to know that a misaligned light path which reflects upon the sealing will damage the sealing very rapidly. At the bottom of the prism exit a “touch” sensor is mounted to protect the prism against accidental lens movements. Note that the Light Processor Unit is equipped with a motorized shutter (dowser) in front of the prism exit.

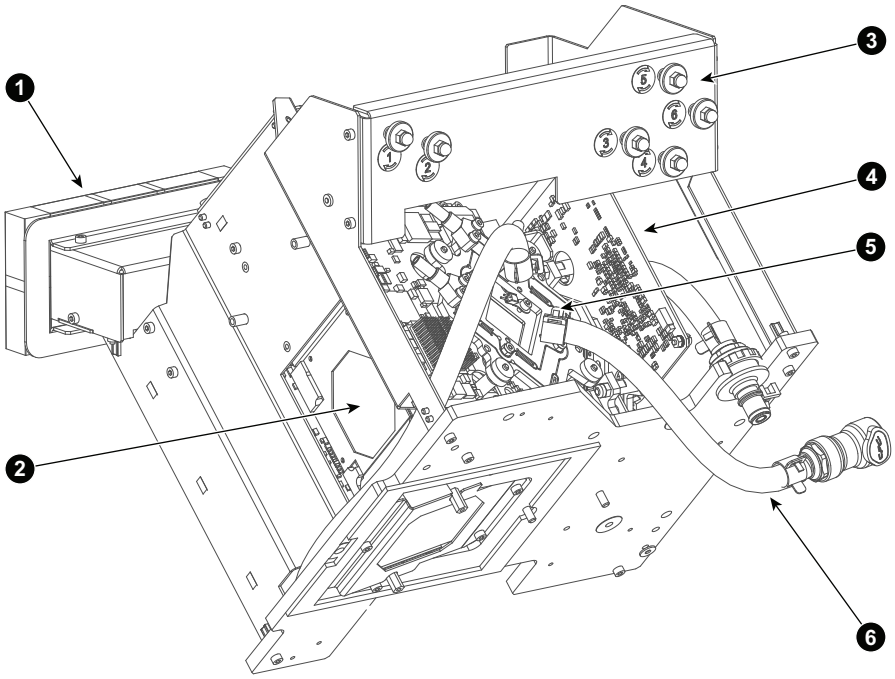


Image 10–4

1 Cable guide.
2 Prism exit.
3 Plate with Convergence adjustment knobs.
4 Formatting board (green channel).
5 Cooling block (red channel)
6 Liquid cooling circuit.

## Light Processor DP4K series

The Light Processor for the DP4K series has the same features as DP2K series but contains other DMD's and has additional fans for the Formatter boards, an additional common cooling block, heat-pipes, and extra temperature sensors.

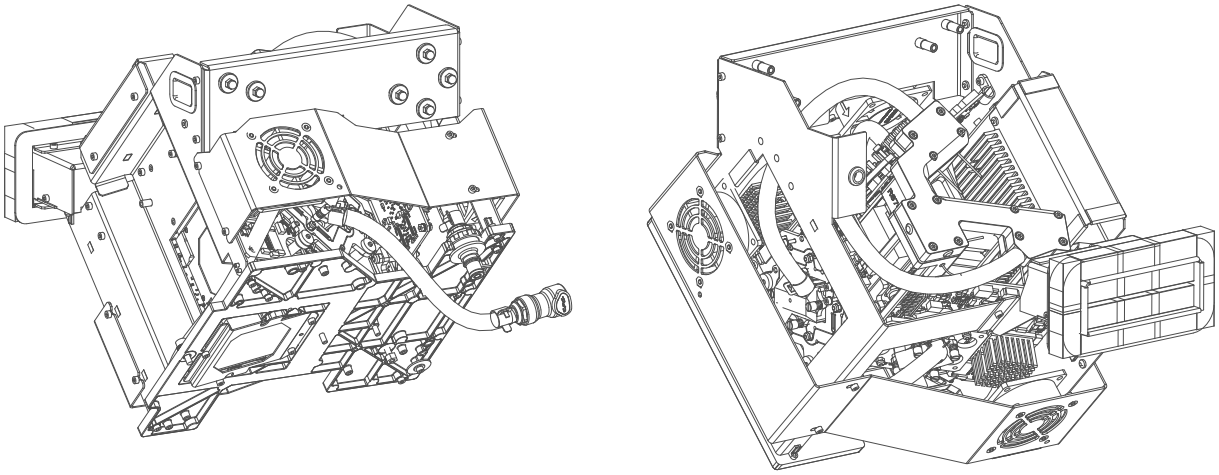

Image 10–5

# 10.2 Diagnostics

## Troubleshooting of the Sealed Light Processor and Light Pipe

There are several reasons why removal or replacing of the Light Processor is required. Nevertheless, try to avoid unnecessary removal of the Light Processor. The list below gives an overview of the most common problems which require removal or replacement of the Light Processor. Check this list to ensure the problem is caused by the Light Processor.

- Artifacts in the projected image. These artifacts are also visible on the internal service patterns of the Formatter boards.
- A crack in the prism, which can result in convergence problems and may disable you to focus the projected image.
- Defect Peltier element, which causes a too high DMD temperature.
- Damaged Integration Rod, which causes permanent spots in the projected image.
- Blocked dowser (shutter). Dowser does not respond when pressing the “PAUSE” button.
- Leakage in liquid cooling circuit.



Check the projector log files for errors or warnings and look for a solution in the Troubleshooting chapter.

# 10.3 Open the sealed compartment

This procedure assumes that the side cover of the projector is already removed.

**CAUTION:** This procedure may only be done by a qualified and trained service technician.

## Required tools

3 mm Allen wrench

## How to open the sealed compartment

1. Remove both hexagon head cap screws (1).

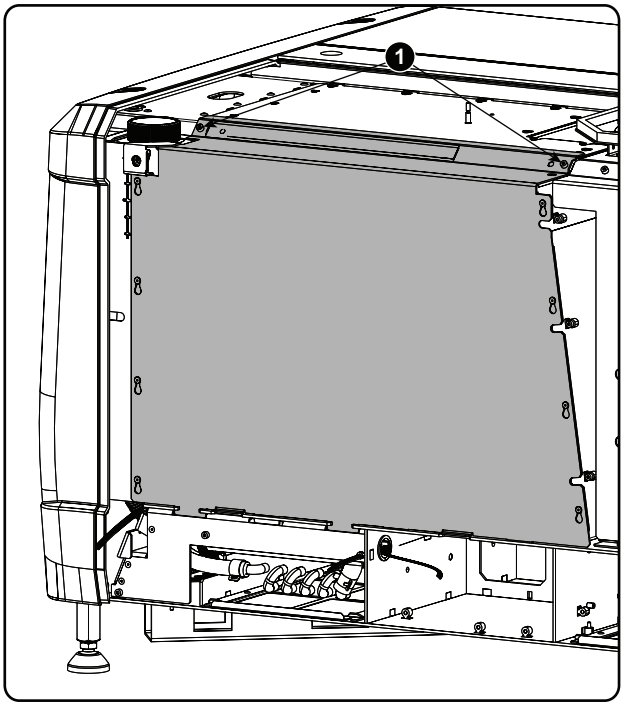


Image 10–6 Sealed cover fixation

2. Lift up the cover plate slightly using both lower lips (2) and then remove the cover by taking it away from the projector.

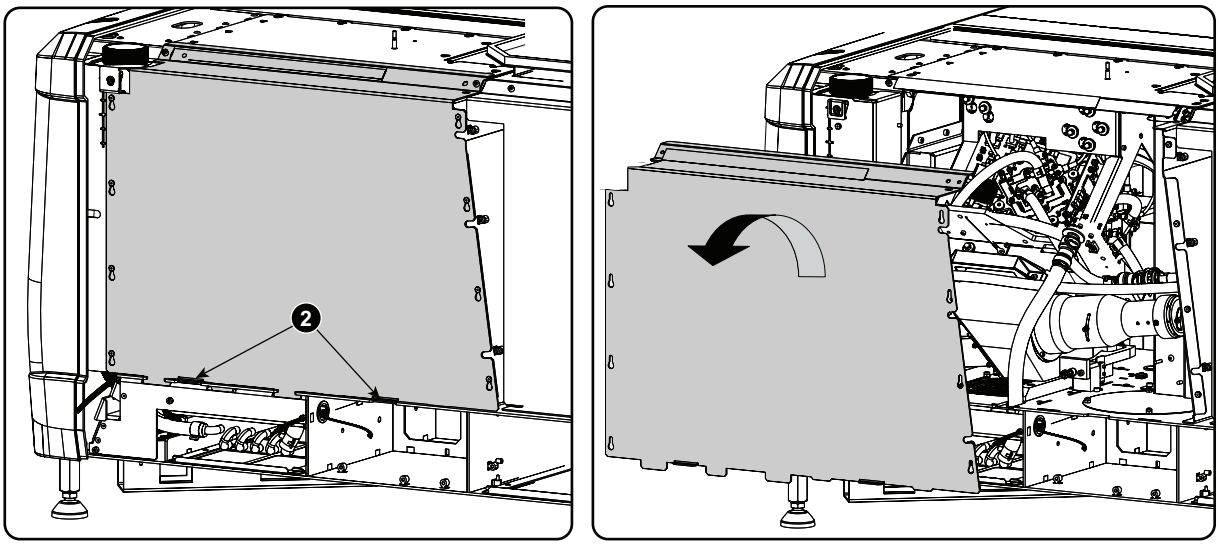


Image 10–7 Sealed cover, remove

A security warning will be displayed on the projector. Execute the procedure “Authorization to clear security warning on the projector”.

# 10.4 Remove light processor top cover

## Required tools

No tools required.

## How to remove

1. Pull the cover a little bit forward.

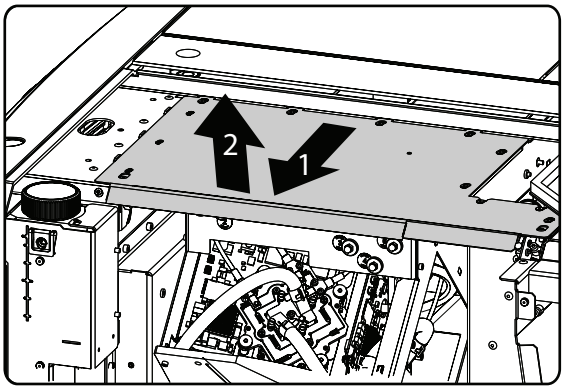


Image 10–8 Light processor top cover removal

2. Lift up the cover to remove.

# 10.5 Electrical disconnection

## Where to find the connections

The connections are situated behind the input & communication unit. To access these connections, first remove the cover above the input & communication unit.

The left side are the formatter connections.

The right side are temperature controls, such as Peltier elements, sensors and motor controls for the shutter.

## Required tools

Allen key 3 mm

## To get access to the connections

1. Remove both screws on the cover plate.

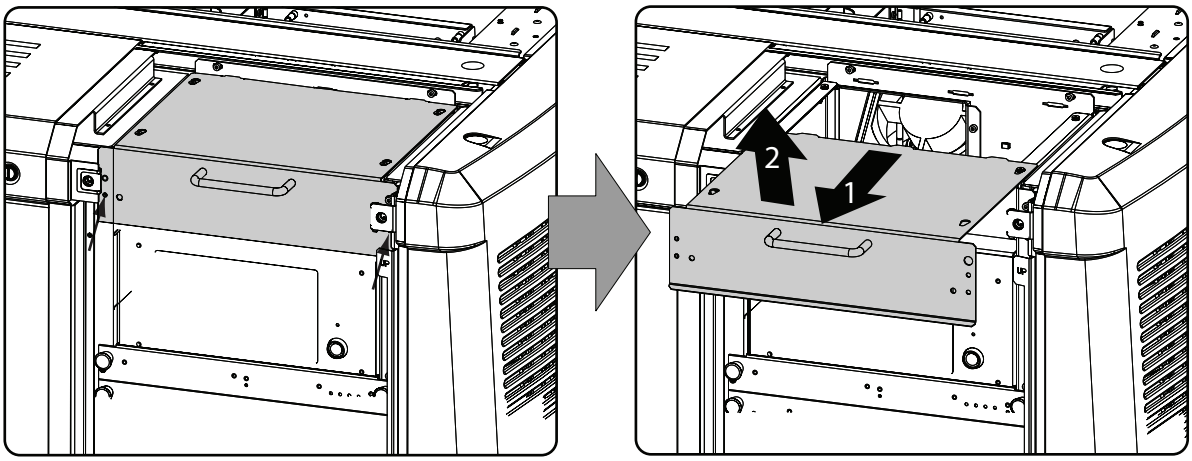


Image 10–9 Input & communication top cover

2. Take the plate by the handle and pull it a little bit out (1) and take it off (2).

   All connections are visible and accessible.

3. If necessary to access the connections, remove the support plate. Turn out the screw (1), loosen the screws (2) and take off the plate.

   First, disconnect the cable which is going through the hole in the plate.

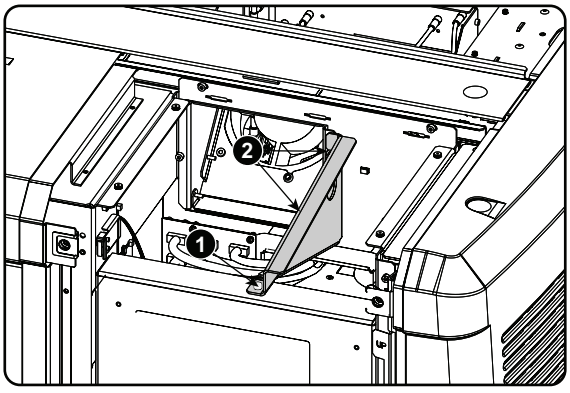


Image 10–10 Support plate

4. Unplug all cables coming from the light processor unit (right and left side of the cable opening).

   *Note:* 4K light processors with new cooling has three less cables to remove from the backplane as the front cooling block is no longer available (Image 10–12).

   *Caution:* Handle the connectors with care. Don't break the connectors during release.

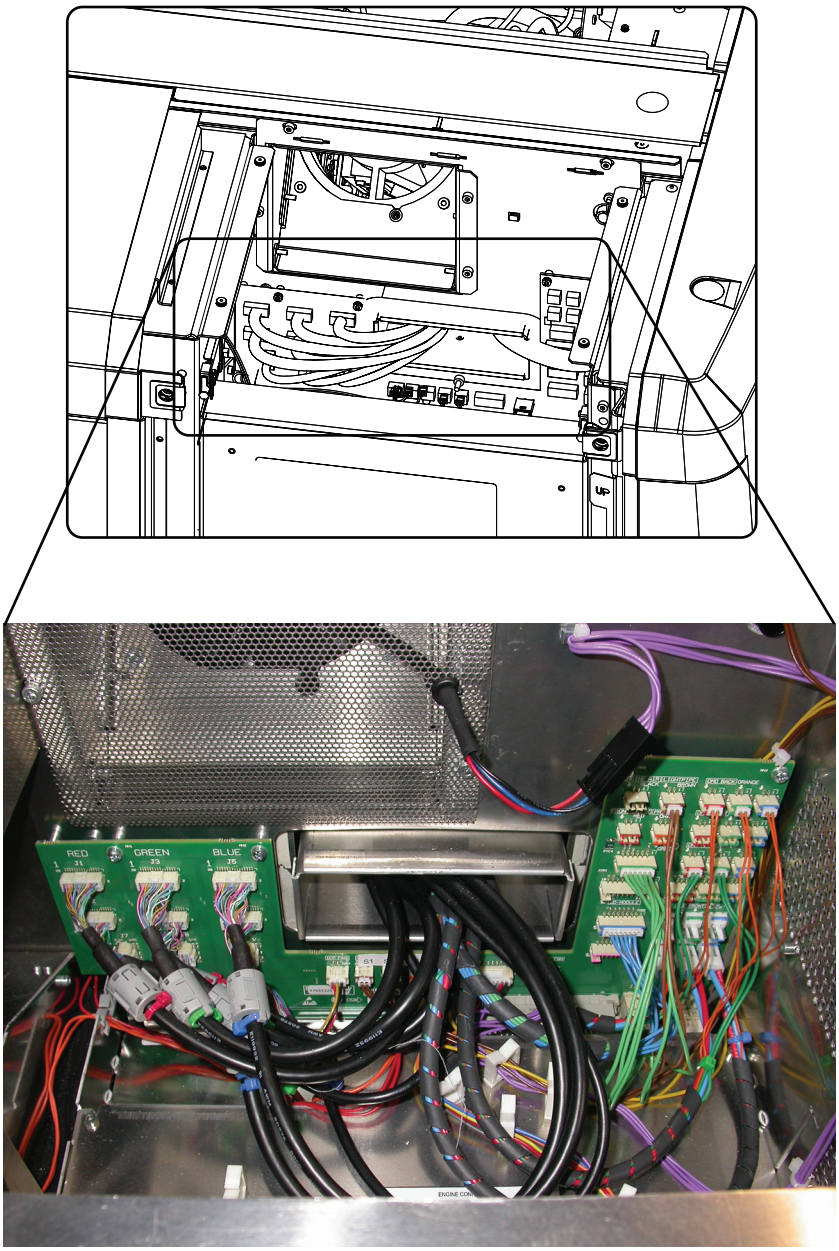


Image 10–11 Cables light processor

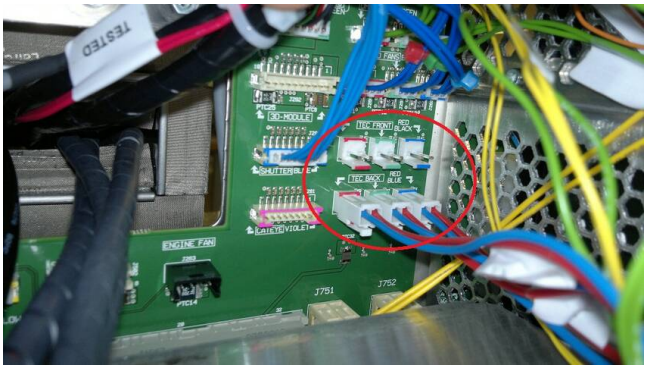


Image 10–12 New 4K light processor cables

# 10.6 Light processor assembly removal

The drawings in this procedure are made for 2K light processors and for the old 4K light processors. For the new 4K light processors, the tubing order is changed. First, it brings the cool water directly to the light processor and then to the entry of the integrator rod. The tube towards the light processor has become slightly longer, while the tube towards the integrator rod entry becomes slightly shorter. When removing tubes, note where you have removed the tube so that you can reinstall in the same way.

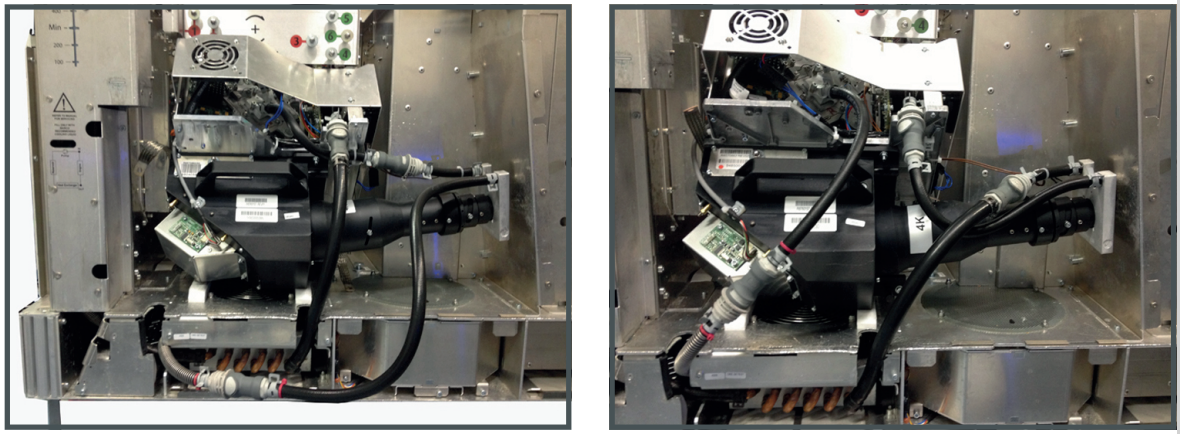

Old circuit connection | New circuit connection

Image 10–13

## Required tools

Flat screw driver 6 x 150

## How to remove

1. Remove the lens (see user guide of the projector)
2. Release both captive screws at the base of the light processor (1 & 2).

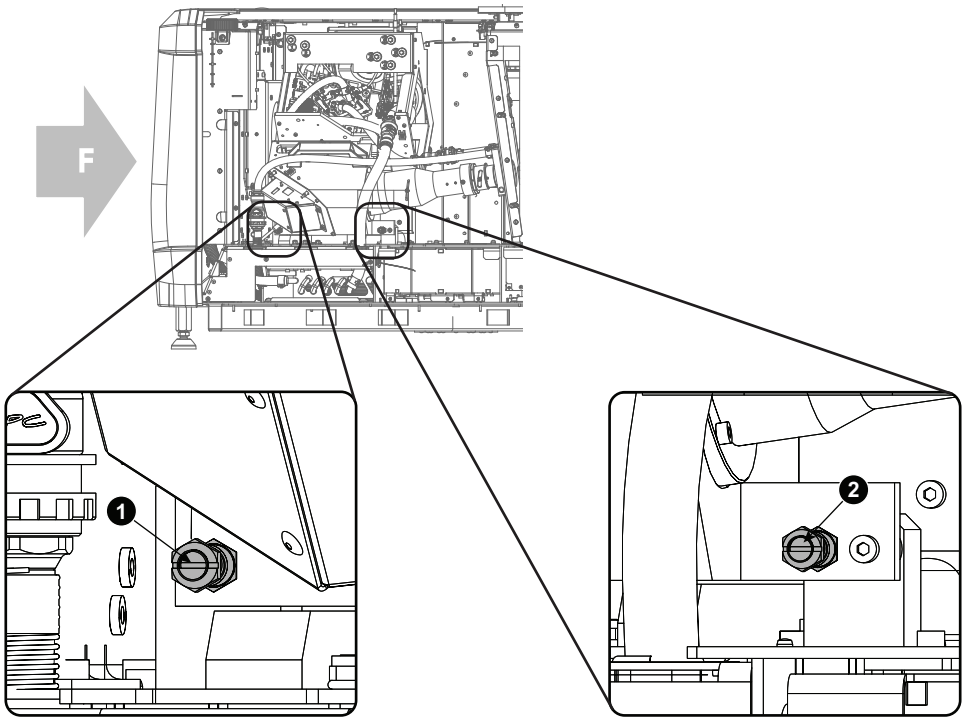


Image 10–14 Light processor fixation

3. Release both EMC cables by turning out both hand screws at the left and right side of the light processor.

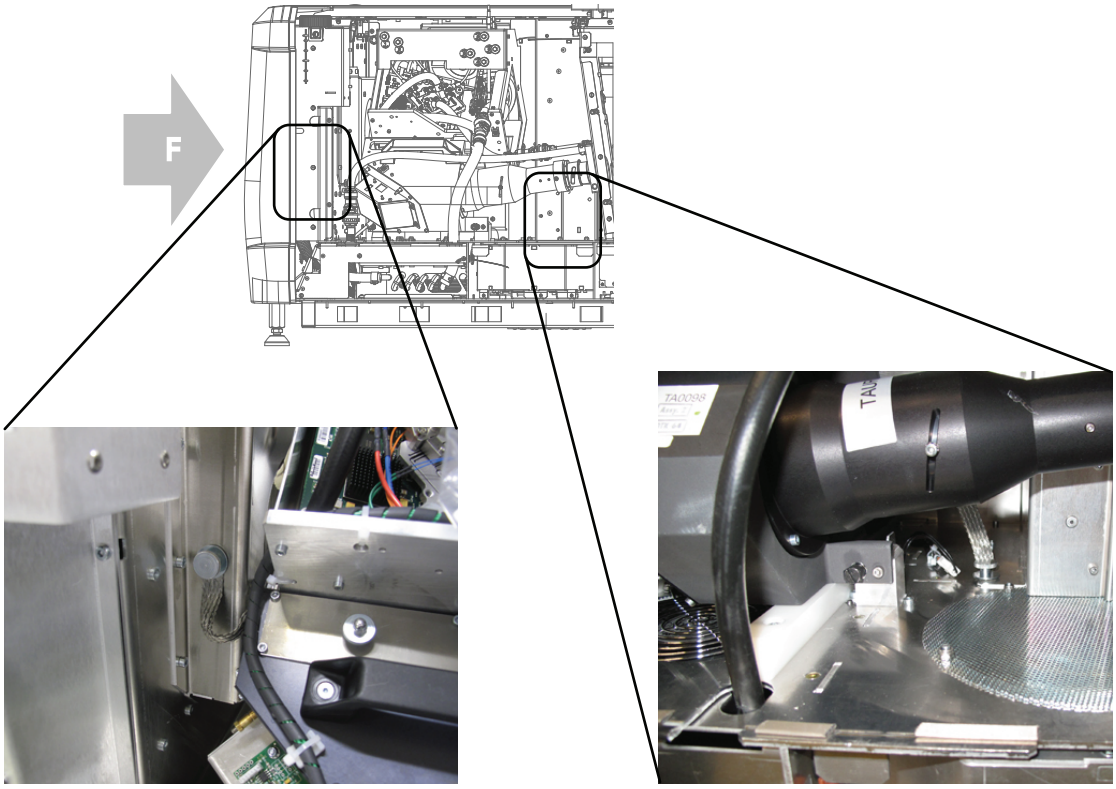


Image 10–15 EMC cables

4. Interrupt the liquid cooling by uncoupling both valved fittings. One valved fitting is situated in the tube coming from the pump and going to the light pipe cooling block. The second valved fittings is located in the tube between the head exchanger and the light processor.

   To interrupt the valved fitting, press on the knob (1) and pull out the connector (2).

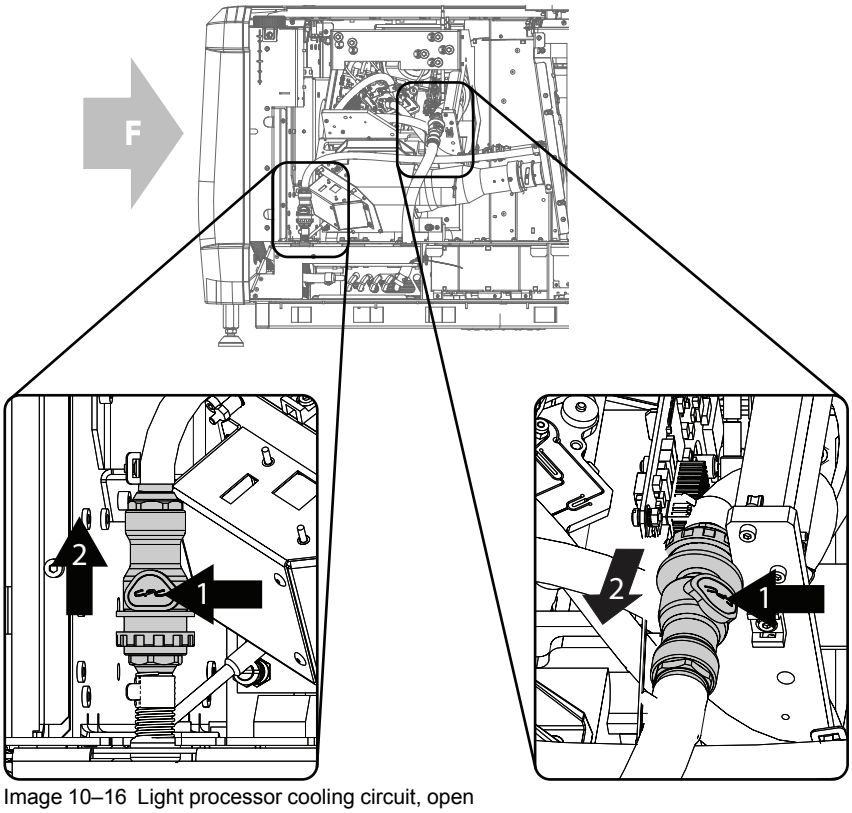


Image 10–16 Light processor cooling circuit, open

5. Take the light processor unit by the handle and pull out the light processor assembly of its compartment. Support the bottom side with your second hand.

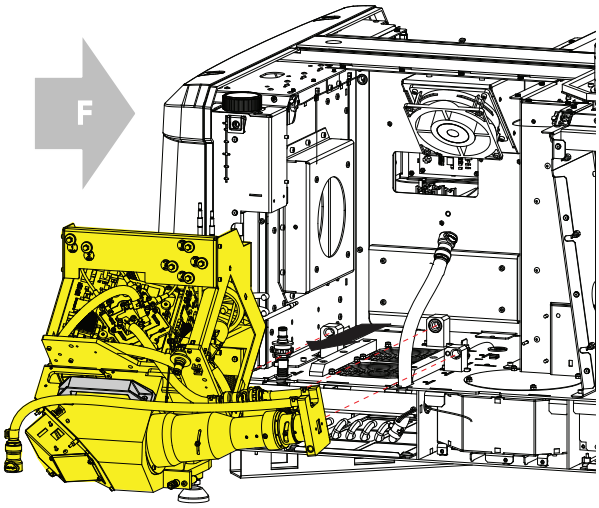


Image 10–17 Light processor, removal

6. Place the light processor on a stable table.

# 10.7 4K Lens and Aperture replacement (Second generation Light Pipe)

This procedure only applies to 4K models

**CAUTION:** Wear nitrile gloves while handling the light pipe components

These procedures assume the light processor assembly has been removed from the sealed compartment. For more info, see “Light processor assembly removal”, page 236.

## About the replacement procedure

This procedure replaces the old 4K lens and aperture of the light pipe with a newer revision of the lens and its appropriate aperture.

## Required tools

- Nitrile gloves (provided in kit)
- Cleaning cloth (provided in kit)
- Allen wrench 3 mm

## Required parts

- Lens
- Aperture plate

## Replacing the lens and aperture

1. Separate the light pipe from the light processor.
2. Place the light pipe assembly as illustrated on a flat and stable surface.

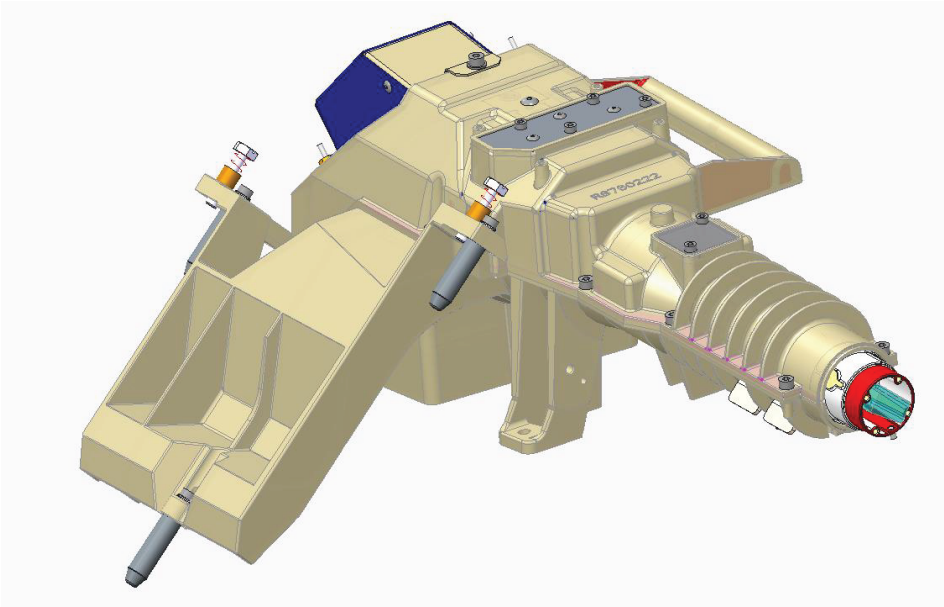

Image 10–18 Light pipe assembly, when removed from the light processor assembly

3. Remove the 10 hex screws from the top cover. Use a 3 mm Allen wrench to loosen the screws.

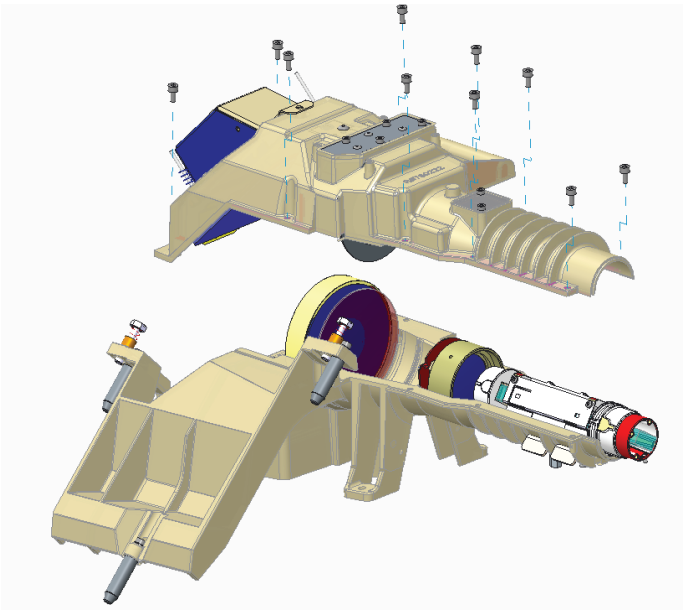

Image 10–19

4. Replace the lens as illustrated.

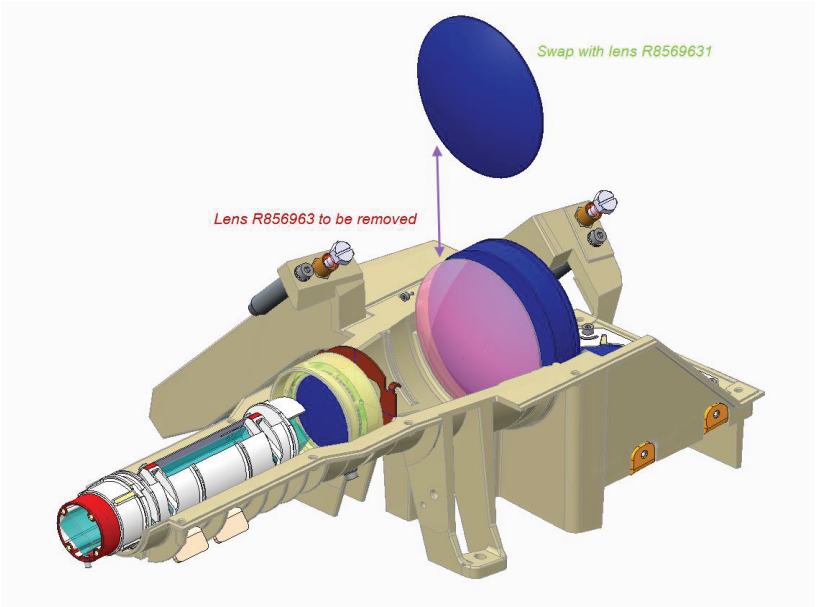


Image 10–20

*Tip:* Take into account the orientation of the lens.

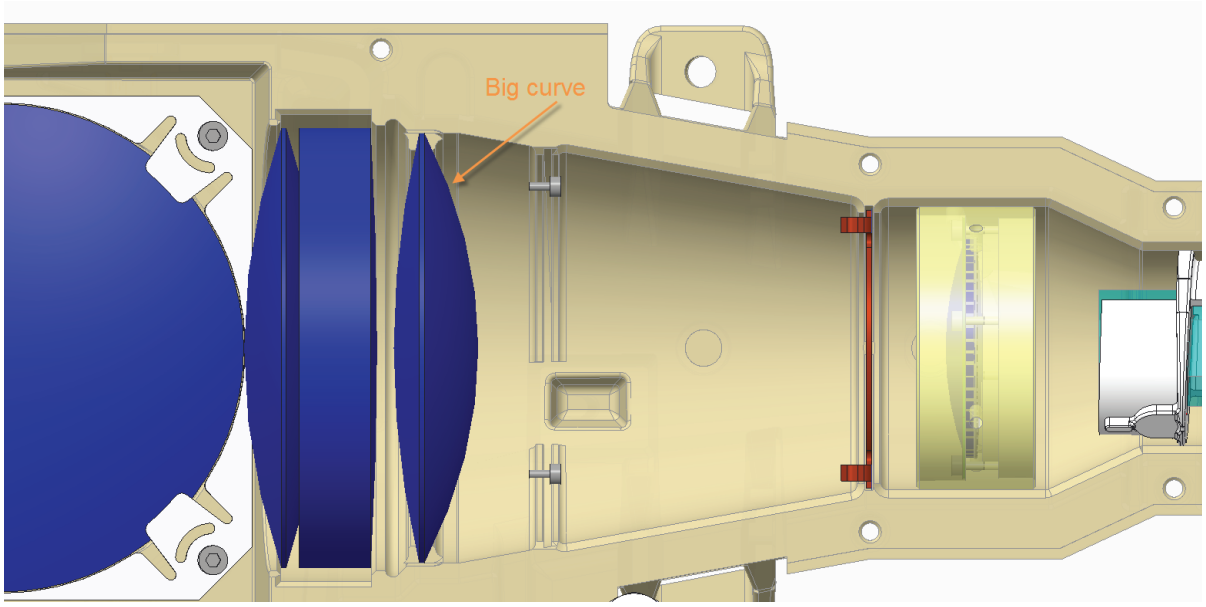


Image 10–21 Take into account the orientation of the new lens

5. Replace the old aperture with the new one as illustrated.

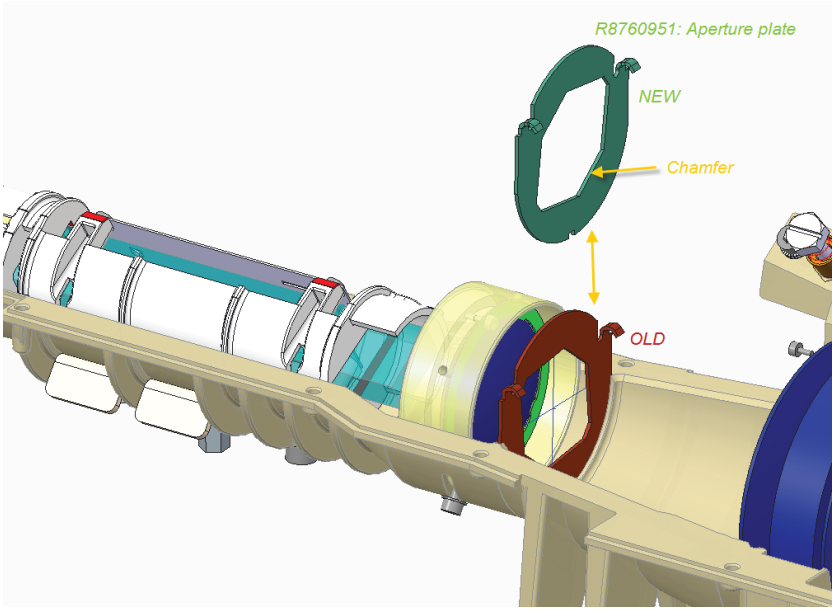


Image 10–22

*Tip:* Take into account the orientation of the bends and chamfer of the new aperture.

6. Carefully mount back the light pipe cover (do not use force). Use a 3 mm Allen wrench to carefully drive in the 10 hex screws.

   *Caution:* **Before** closing the cover, check inside the light pipe path for any form of dust. If dust can be found, use the provided cleaning cloth to remove it. Alternatively, you can also use compressed air.

7. Reassemble the light processor assembly and mount it back into the projector. For more info, see “Installation of the light processor assembly”, page 242.

# 10.8 Installation of the light processor assembly

After installing a new Light Processor, the LUT-SCC file of the new Light Processor has to be installed and activated. See chapter “Spatial Color Calibration (LUT-SCC)”, page 273.

For the new 4K light processors, the tubing order is changed. First, it brings the cool water directly to the light processor and then to the entry of the integrator rod. The tube towards the light processor has become slightly longer, while the tube towards the integrator rod entry becomes slightly shorter.

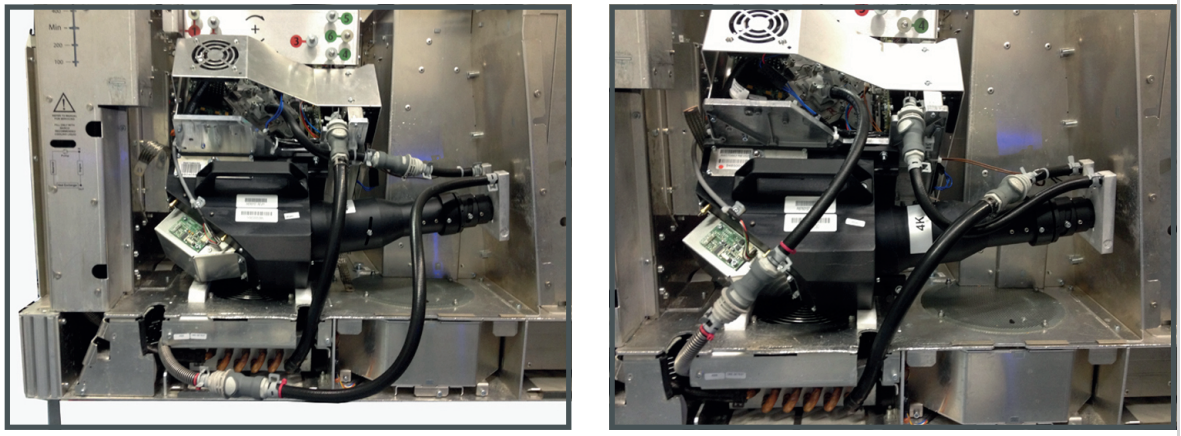

Old circuit connection | New circuit connection

Image 10–23

The drawings in this procedure are made for 2K light processors and for the old 4K light processors.

## Required tools

Flat screw driver 6 x 150

## How to install

1. Make sure there is no lens mounted.
2. Take the light processor assembly with one hand by the handle and use the second hand to support the light processor.
3. Gently slide the assembly into the compartment of the projector.

   Make sure that the positioning pins (1,2 & 3) at the backside of the assembly match the positioning holes in the projector (1, 2 & 3).

   While inserting the assembly, guide the cables through the hole to the back plane side.

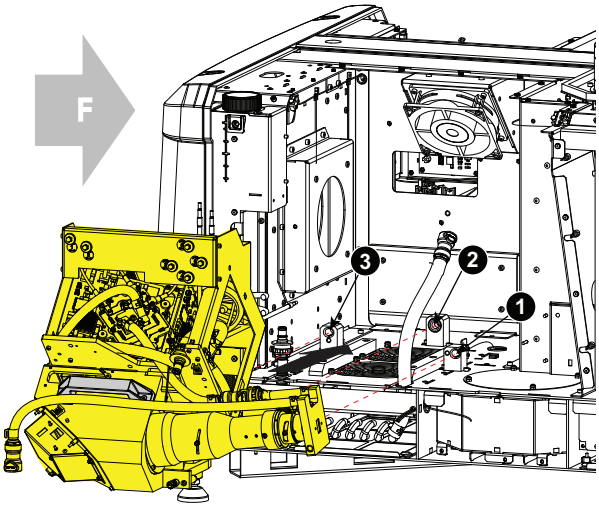


Image 10–24 Light processor, mount

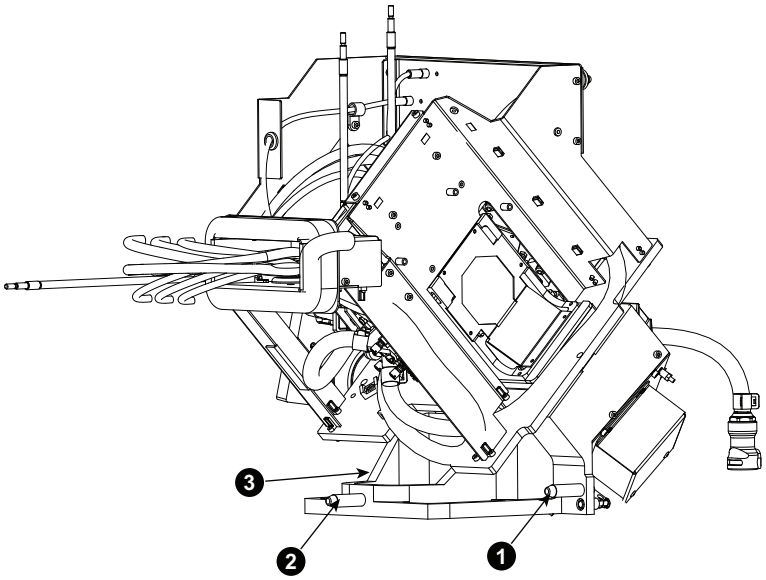


Image 10–25

4. Secure the light processor assembly by fasting both captive screws (1 & 2).

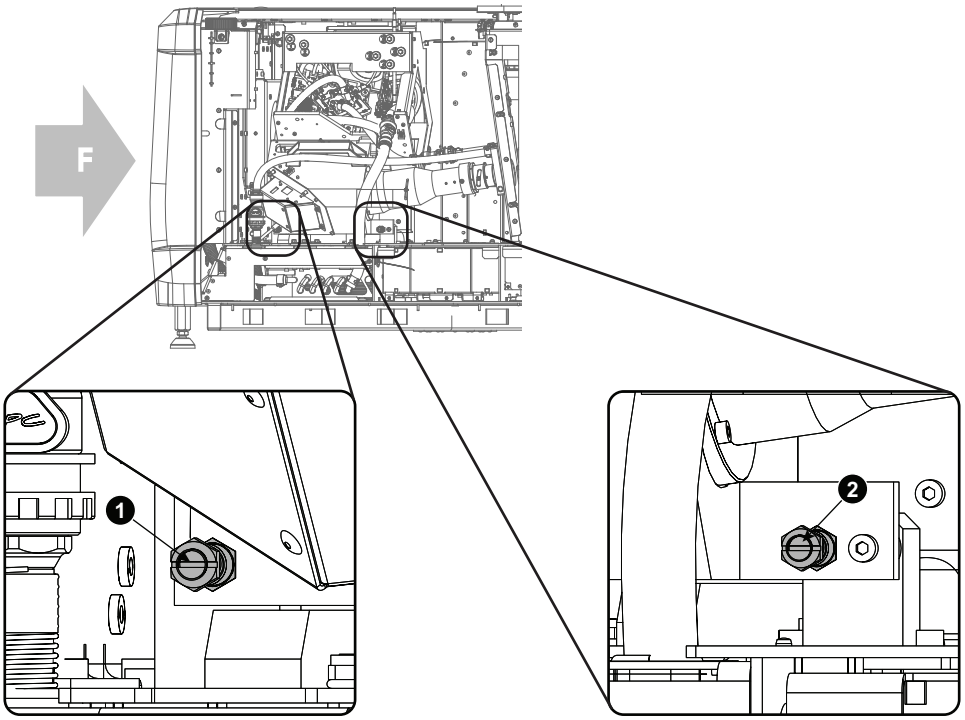


Image 10–26 Light processor, fixation

5. Close the cooling circuit on 2 places.

   Plug the male connector into to the female connector until clicks.

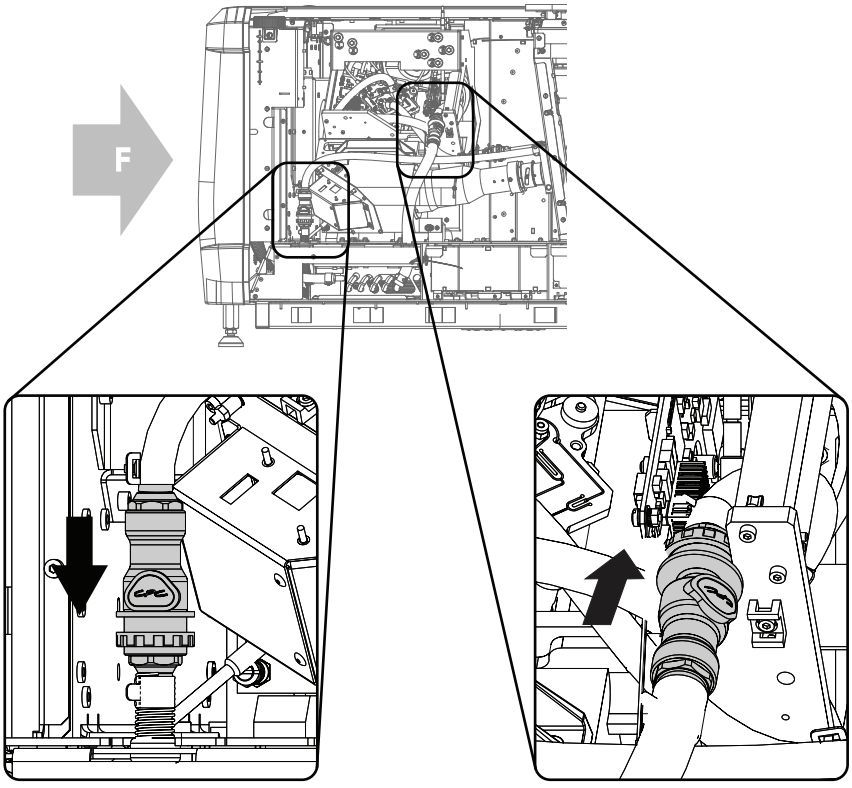


Image 10–27 Close cooling circuit

6. Mount the EMC cables at the left and right side of the light processor by fasting both hand screws.

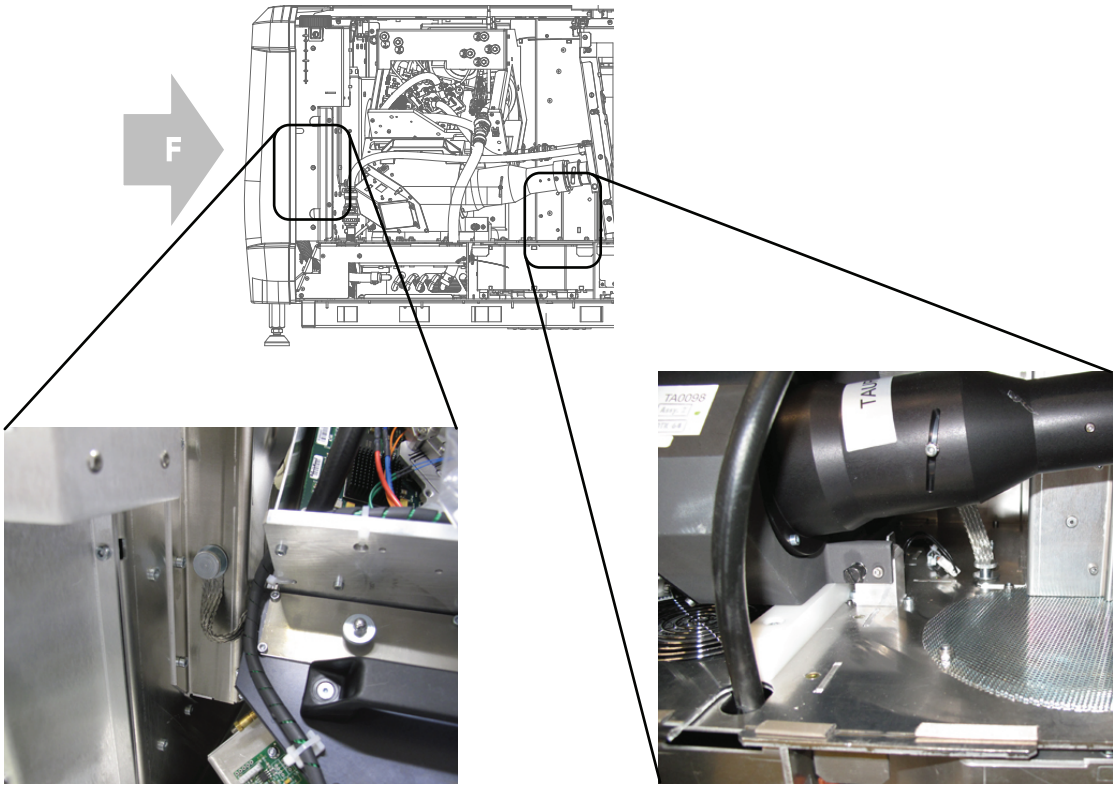


Image 10–28 EMC cables

# 10.9 Electrical connections

## Preparations

Guide all cables through the hole in the back plane, and guide the black formatter cables to the left and the others to the right.

## Formatter connections

All formatter cables, data and power, have a colored cable tie. There are 2 cables per color available, both with a different connector. The color name is screen on the printed circuit board. Plug in the cable with e.g. a red cable tie into the connector with the same size and with the indication Red. Repeat for all other cables.

## Other connections (right side)

Color convention for the connections.

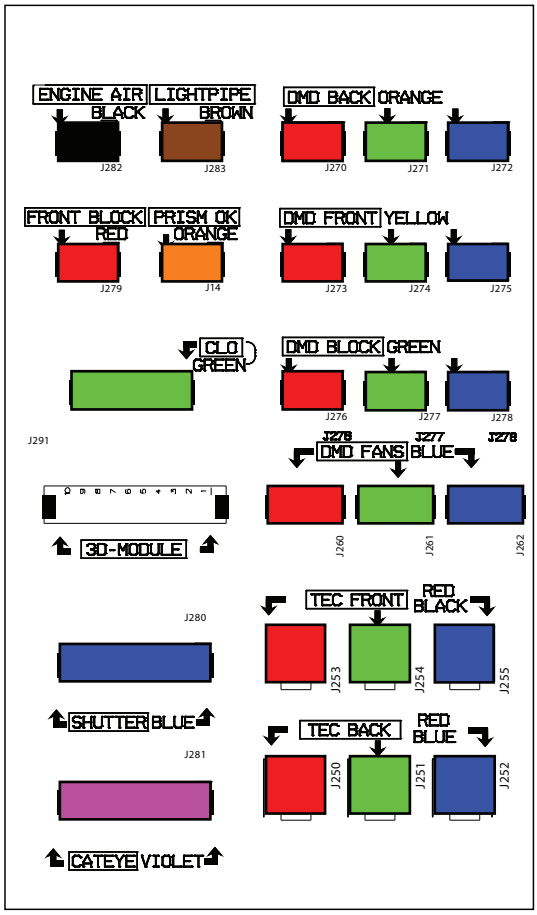


Image 10–29 Color coding cables

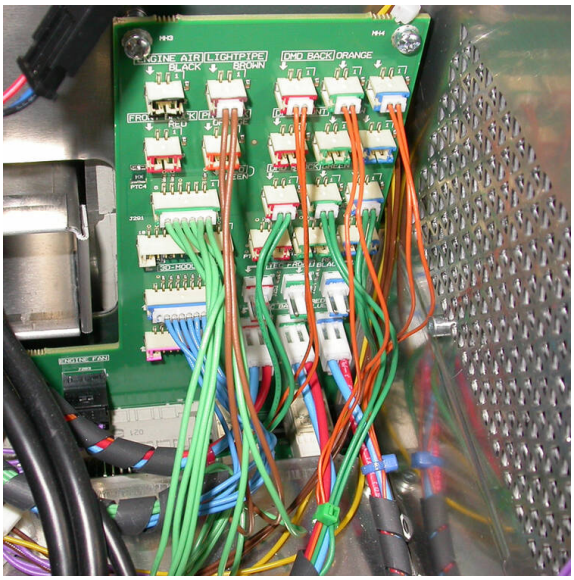

Image 10–30 Color coding, image

The color indication on the socket corresponds with the colored cable tie on the cable next to the connector.

The screened color indication just above the sockets corresponds with the color of the wires in the cable tree.

4K light processors with new cooling has three less cables to remove from the backplane as the front cooling block is no longer available .

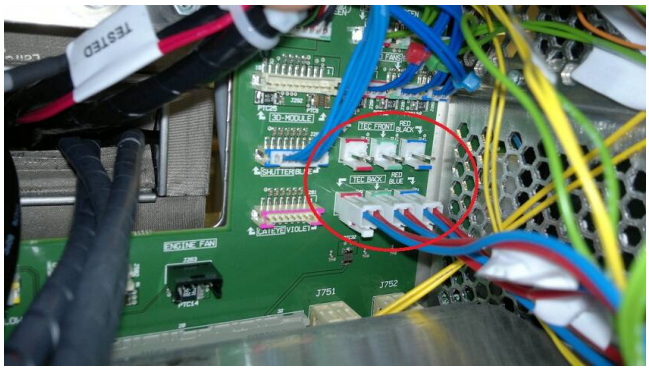


Image 10–31 New 4K light processor cabling

# 10.10 Input and Communication top cover

## Required tools

Allen key 3 mm

## How to mount

1. When the support plate was removed, slide the plate back on its place and drive in a screw to secure its position.
2. Take the cover plate by its handle, match the big holes with the studs on the frame and pull it to the projector until the front plate is against the frame.

   Drive in both screws to secure its position.

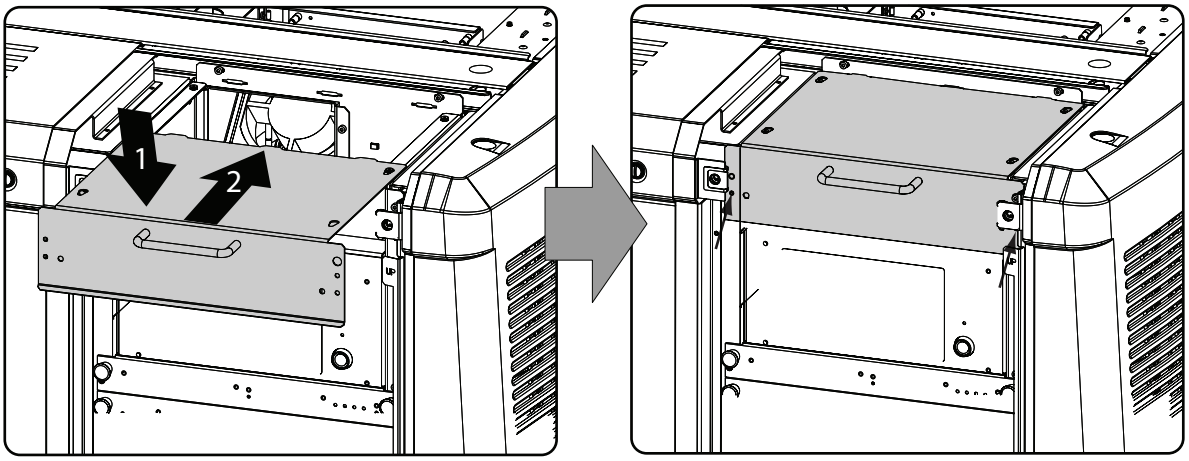


Image 10–32 Top plate, mount

# 10.11 Convergence controls

## Definitions-Abbreviations

- **X**: Horizontal direction on the screen, with origin in the centre of the screen and + to the right
- **Y**: Vertical direction on the screen, with origin in the centre of the screen and + to the top
- **Z** rotation: Tilting of the X and Y axes in their plane: + is clockwise rotation
- **[1]** ; **[2]** ; **[3]** ; **[4]** ; **[5]** ; **[6]** : these are the 6 adjustments available as they appear on the standard convergence adjustment screen.

## Convergence controls, location

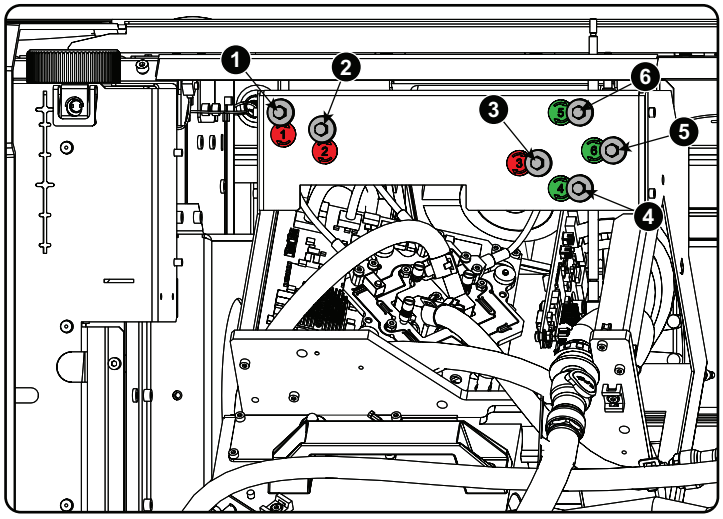


Image 10–33 Convergence knobs

1 Red channel, knob number 1 (position of knob can slightly differ)
2 Red channel, knob number 2
3 Red channel, knob number 3
4 Green channel, knob number 4
5 Green channel, knob number 5
6 Green channel, knob number 6

## Convergence Test pattern

For the manual correction of the DMD convergence, a typical convergence test pattern is generated. For a 4K projector, use the 4K test pattern.

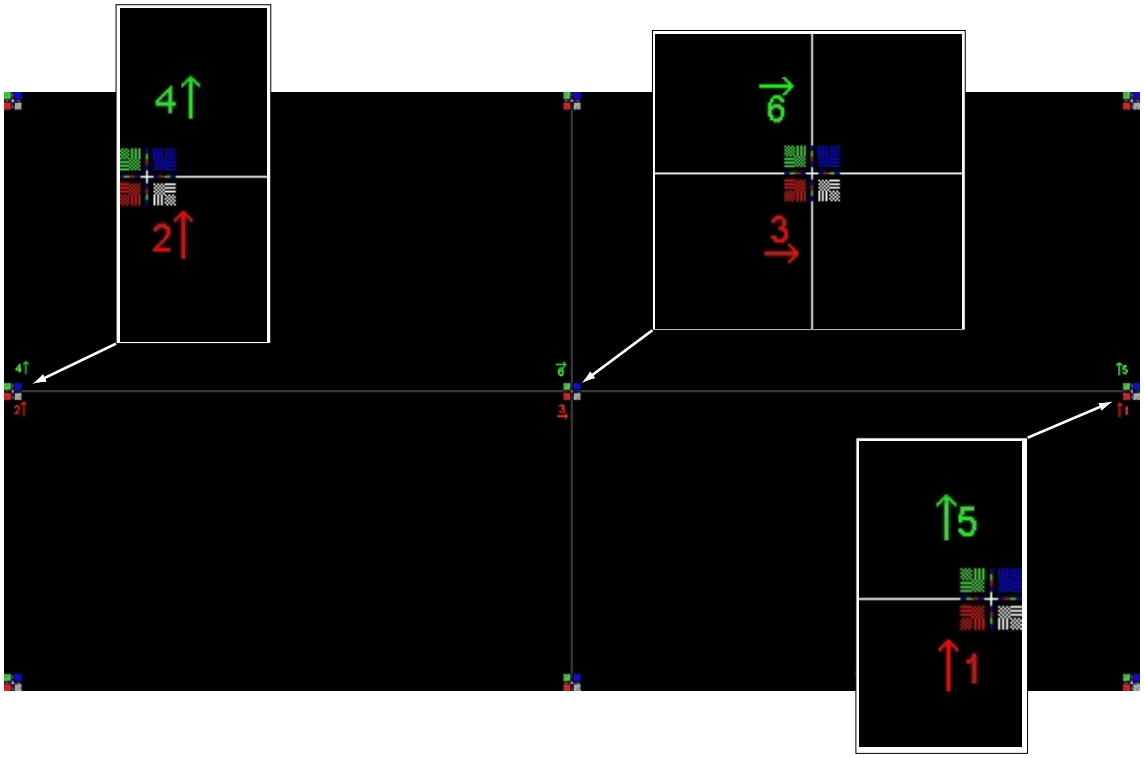


Image 10–34 Convergence test pattern

## Work Instructions:

- GREEN and RED DMD's are to be adjusted with reference to the BLUE dmd.
- Each adjustment allows for approximately 10 pixels (for 2K projectors) or 20 pixels (for 4K projectors) maximum displacement to either side of the nominal BLUE position
- Rotation is limited to approximately +/- 5pixels on the left screen flank and +/- 5 pixels on the right screen flank
- One turn of an adjustment screw relates to an approx. 5-pixel displacement on the screen.
- Let the projector warming up for 30 minutes, while projecting the convergence test pattern, before starting to adjust the convergence.

## Take Care:

- In rare cases it can happen that the nominal dmd position falls within a **dead zone**, where the mechanism changes from a pushing to a pulling function. This dead zone is due to inherent tolerances within the mechanism. Approximately 2 turns are required to get out of the dead zone. If it so happens that the nominal position of an adjustment falls within this dead zone, it is preferable to continue screwing through the dead zone for another 2 turns. Then return to the required nominal position. The dead zone should now be displaced away from the required end position. The DMD is now securely held in the nominal position.
- Each adjustment is limited to approximately 10 pixels (for 2K projectors) or 20 pixels (for 4K projectors) displacement. DO NOT try to force the adjustment beyond this point. The system has an end of travel in both directions, but with excessive force one could cause damage.

# 10.12 Red on blue convergence

## Required tools

No tools required.

## Converging the RED pattern onto the BLUE pattern

**Start with aligning the RED DMD in the vertical directions [1] and [2] and then proceed with the horizontal direction [3]**

1. To translate RED vertically in the Y + direction, turn both [1] and [2] clockwise. Turn screws in equal increments.
2. To translate RED vertically in the Y - direction, turn both [1] and [2] anti-clockwise. Turn screws in equal increments.
3. To translate RED horizontally in the X + direction, turn [3] clockwise.
4. To translate RED horizontally in the X - direction, turn [3] anti-clockwise.
5. For clockwise rotations of RED, turning [1] anti-clockwise would generally suffice. If much rotation is required, [2] may also be turned in the opposite direction. Slight corrections to Y may be required after rotation.
6. For anti-clockwise rotations of RED, turning [1] clockwise would generally suffice. If much rotation is required, [2] may also be turned in the opposite direction. Slight corrections to Y may be required after rotation.

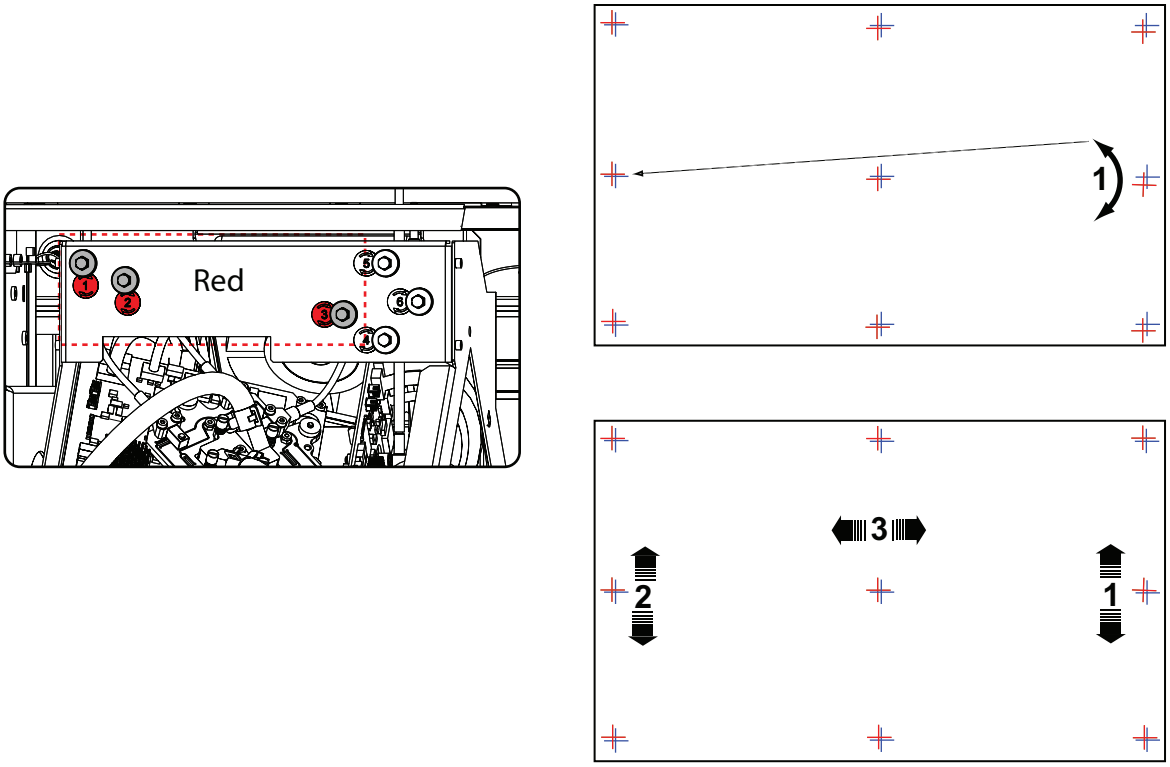


Image 10–35 Red on blue convergence

# 10.13 Green on blue convergence

## Required tools

No tools required.

## Converging the GREEN pattern onto the BLUE pattern

**Next , align the GREEN DMD in the vertical directions [4] and [5] and then proceed with the horizontal direction [6].**

1. To translate GREEN vertically in the Y + direction, turn both [4] and [5] clockwise. Turn screws in equal increments.
2. To translate GREEN vertically in the Y - direction, turn both [4] and [5] anti-clockwise. Turn screws in equal increments.
3. For clockwise rotations of GREEN, turning [5] anti-clockwise would generally suffice. If much rotation is required, [4] may also be turned in the opposite direction. Slight corrections to Y may be required after rotation.
4. For anti-clockwise rotations of GREEN, turning [5] clockwise would generally suffice. If much rotation is required, [4] may also be turned in the opposite direction. Slight corrections to Y may be required after rotation.
5. To translate GREEN horizontally in the X + direction, turn [6] clockwise.
6. To translate GREEN horizontally in the X - direction, turn [6] anti-clockwise.

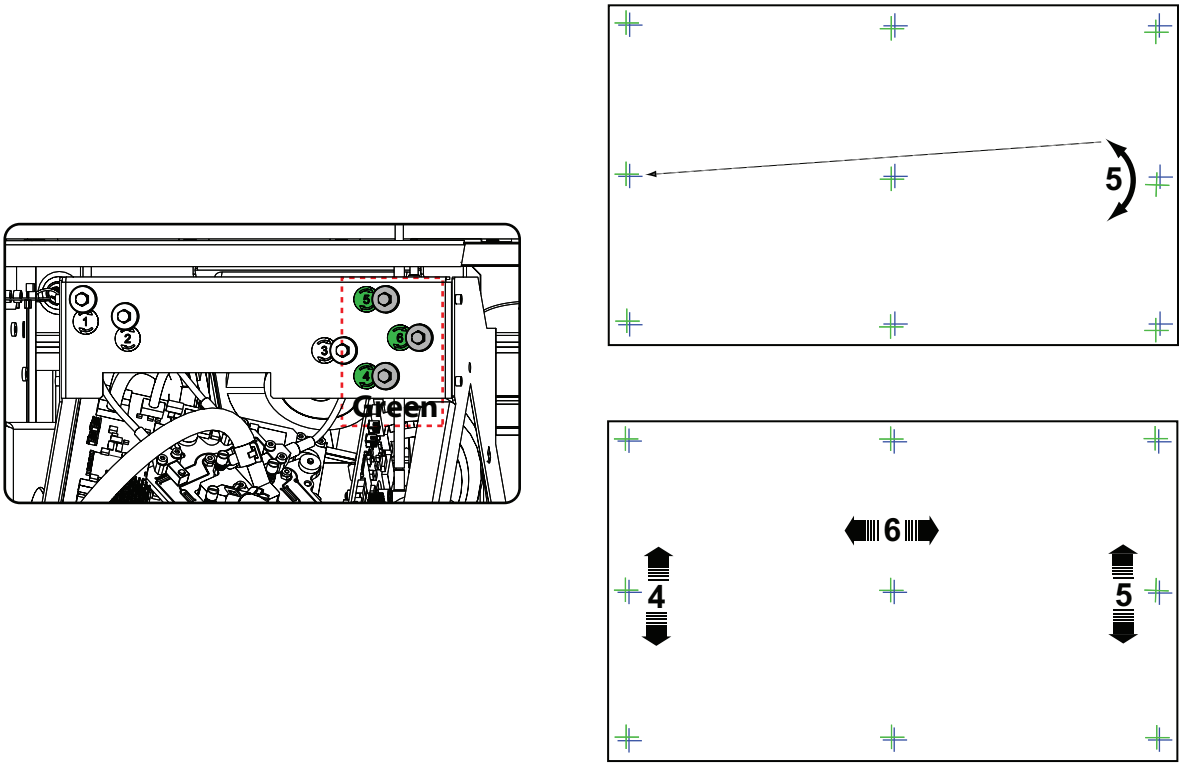


Image 10–36 Green on blue convergence

# 10.14 Mount light processor top cover

## Required tools

No tools required.

## How to mount

1. Place the plate on the projector frame so that the studs on the frame matches the big holes in the plate.

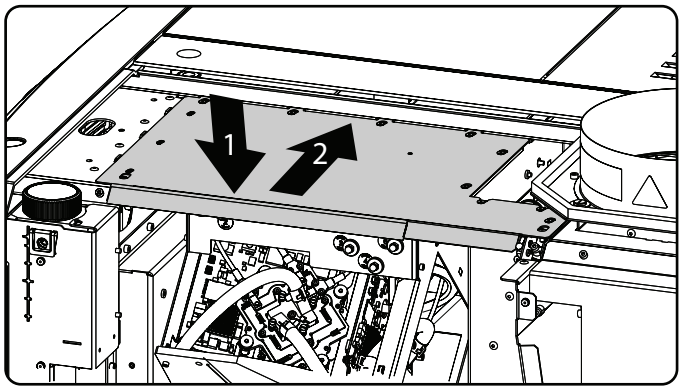


Image 10–37 Light processor cover

2. Slide the plate towards the projector until it is fully inserted

# 10.15 Close the sealed compartment

## Required tools

3 mm Allen wrench

## How to close the sealed compartment

1. Hook the cover plate on the studs.

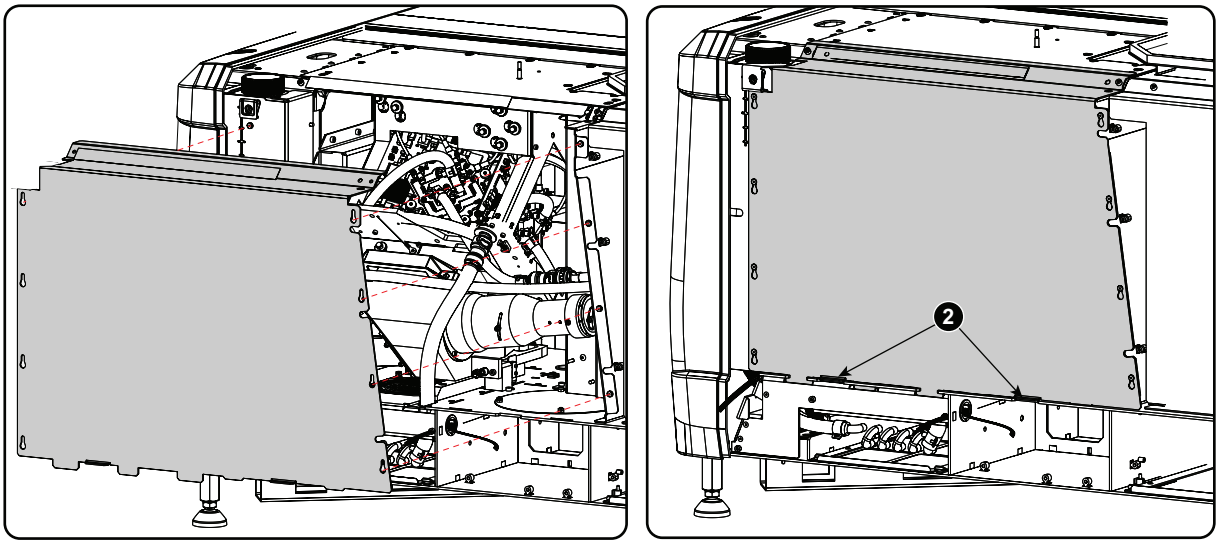


Image 10–38 Sealed cover, mount

2. Slide the cover downwards by pushing on both lips until it is in its correct position.
3. Drive in both fixation screws (1).

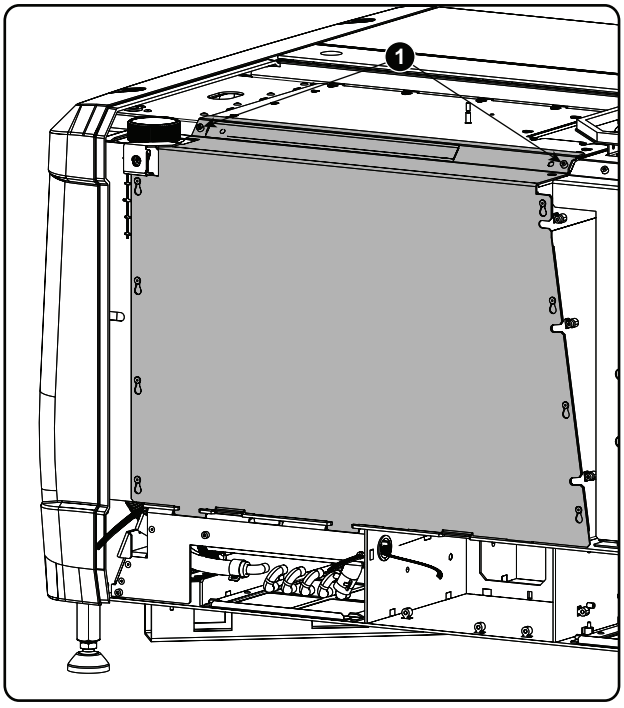


Image 10–39 Sealed cover, fixation

# 10.16 Adjusting the Fold Mirror (First generation Light Pipe)

## Purpose of the Fold Mirror

The Fold Mirror is folding up the light path of the projector to make the projector more compact. The Fold Mirror is located at the left side of the Light Pipe and reflects the light, which entrance the Light Pipe via the Integration Rod, upon the prism of the Sealed Light Processor. The position of the light spot upon the DMD's can be adjusted with the Fold Mirror.

**CAUTION:** Normally the Fold Mirror should never be readjusted in the field. In case a readjustment is required follow the instructions in this chapter precisely. Only qualified technicians who have experience with adjusting the Fold Mirror may adjust the Fold Mirror. A misaligned Fold Mirror may cause irreversible damage to other parts of the projector!

To access all three adjustment screws of the Fold Mirror the left side cover, the cover of the sealed compartment and the Fold Mirror cover plate have to be removed. This procedure assumes that the left side cover and the cover of the sealed compartment is already removed from the projector.

## Required tools

5,5 mm nut driver.

## How to adjust the Fold Mirror?

1. Disconnect the wire unit (reference 1 Image 10–40) from the Light Sensor Module.

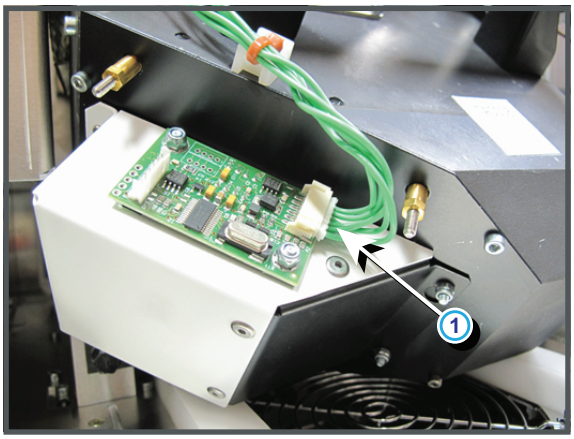


Image 10–40

2. Remove the Fold Mirror cover and the Light Sensor Module as a whole from the Light Pipe as illustrated. Do this by loosening the two screws (reference 1 Image 10–41), which fasten the cover plate, a few turns. Use a 5,5 mm nut driver.

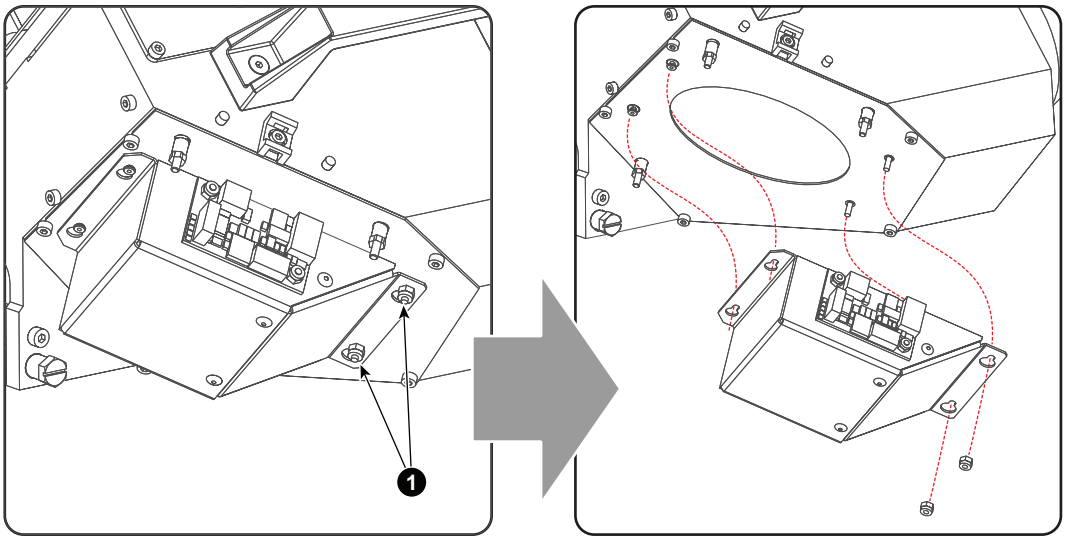


Image 10–41

3. Start up de projector and display a white test pattern with maximum dimming.

   *Caution:* Projecting a misaligned light spot for more then 10 seconds may cause irreversible damage to the Light Processor. Therefore, it is important to maximum dim the light output and adjust the light spot as quickly as possible.

4. Turn the adjustment screws A, B or C in or out until the light spot (5) matches with the outline of the DMDs (4). Use for that a 5,5 mm open end wrench. The illustration below shows the movements of the light spot (5) upon the screen (6) for each adjustment screw.

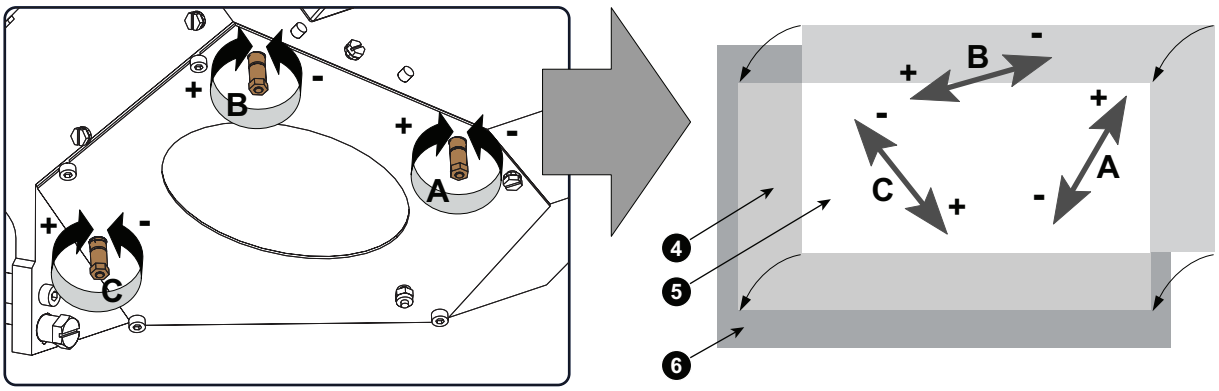


Image 10–42

5. Reinstall the cover of the Fold Mirror.
6. Reconnect the Light Sensor Module.
7. Place a light meter in the center of the screen and calibrate the Light Sensor Module. For detailed instructions see user guide of the Projector Toolset software.

Turn the three adjustment screws of the Fold Mirror equally counterclockwise to achieve a higher contrast of the projected image. Then, readjust the adjustment screws individual until the light spot matches with the outline of the DMDs. Take into account that a higher contrast is at the expense of brightness.

# 10.17 Adjusting the Fold Mirror (Second generation Light Pipe)

## Purpose of the Fold Mirror

The Fold Mirror is folding up the light path of the projector to make the projector more compact. The Fold Mirror is located at the left side of the Light Pipe and reflects the light, which entrances the Light Pipe via the Integration Rod, upon the prism of the Sealed Light Processor. The position of the light spot upon the DMD's can be adjusted with the Fold Mirror.

**CAUTION:** Normally the Fold Mirror should never be readjusted in the field. In case a readjustment is required follow the instructions in this chapter precisely. Only qualified technicians who have experience with adjusting the Fold Mirror may adjust the Fold Mirror. A misaligned Fold Mirror may cause irreversible damage to other parts of the projector!

To access all three adjustment screws of the Fold Mirror the left side cover, the cover of the sealed compartment, and the Fold Mirror cover have to be removed. This procedure assumes that the left side cover and the cover of the sealed compartment is already removed from the projector.

## Required tools

- 3mm Allen wrench.
- 5.5mm open end wrench.

## How to adjust the Fold Mirror?

1. Disconnect the wire unit (reference 1 Image 10–43) from the Light Sensor Module.

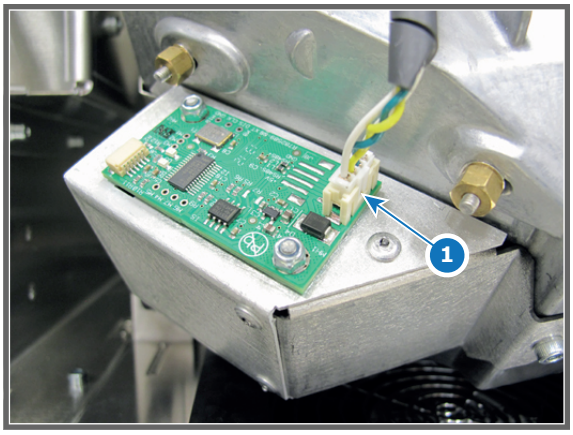


Image 10–43

2. Remove the Fold Mirror cover and the Light Sensor Module as a whole from the Light Pipe as illustrated. Do this by removing the screw (reference 2 Image 10–44), which fasten the cover plate. Use a 3mm Allen wrench.

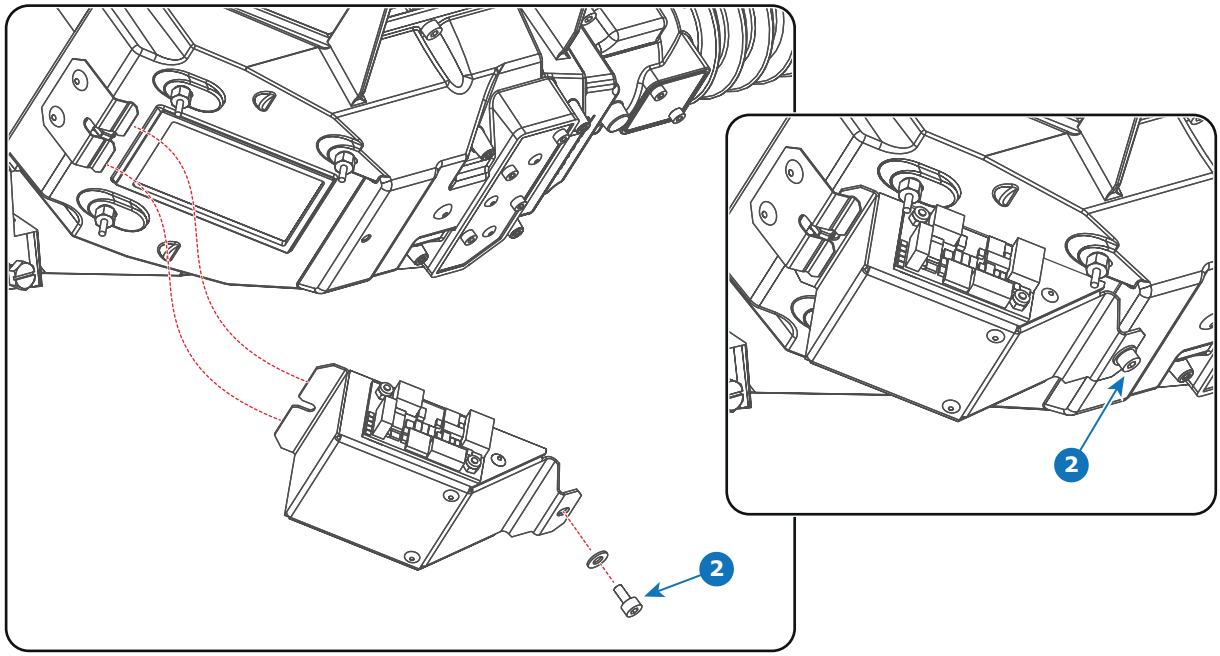


Image 10–44

3. Start up the projector and display a white test pattern with maximum dimming.

   *Caution:* Projecting a misaligned light spot for more then 10 seconds may cause irreversible damage to the Light Processor. Therefore, it is important to maximum dim the light output and adjust the light spot as quickly as possible.

4. Turn the adjustment screws A, B or C in or out until the light spot (reference 5) matches with the outline of the DMDs (reference 4). Use for that a 5.5mm open end wrench. The illustration below shows the movements of the light spot (reference 5) upon the screen (reference 6) for each adjustment screw.

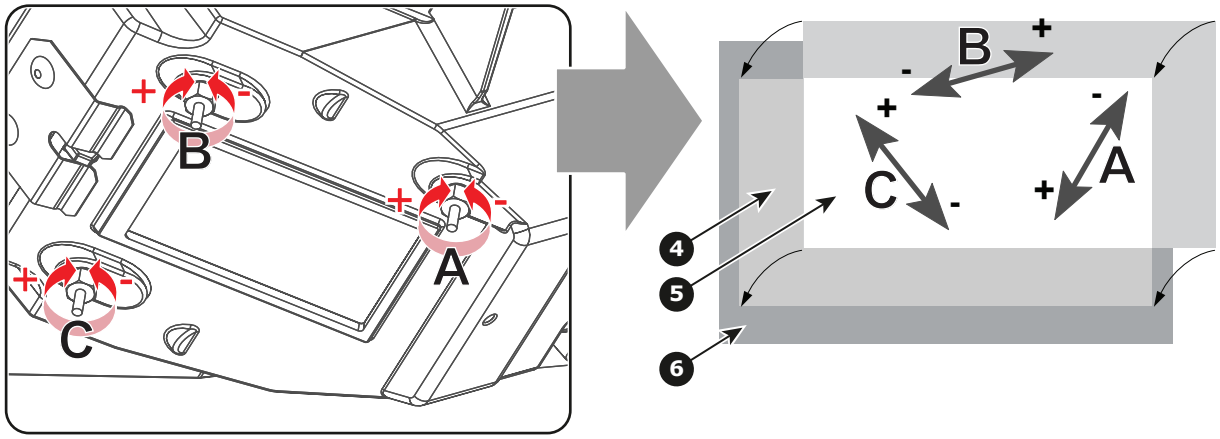


Image 10–45

5. Reinstall the cover of the Fold Mirror.
6. Reconnect the Light Sensor Module.
7. Place a light meter in the center of the screen and calibrate the Light Sensor Module. For detailed instructions see user guide of the Projector Toolset software.

Turn the three adjustment screws of the Fold Mirror equally counterclockwise to achieve a higher contrast of the projected image. Then, readjust the adjustment screws individual until the light spot matches with the outline of the DMDs. Take into account that a higher contrast is at the expense of brightness.

# 10.18 Adjusting the Light Pipe Zoom Lens (First generation Light Pipe)

## Purpose of the Light Pipe Zoom Lens

The Light Pipe Zoom Lens is located inside the Light Pipe between the Integration Rod and the Fold Mirror. The light spot upon the DMDs can be reduced or enlarged with the Light Pipe Zoom Lens to fit with the outline of the DMDs.

The cover of the Light Processor has to be removed from the projector to adjust the Light Pipe Zoom Lens. This procedure assumes that the this cover is already removed from the projector.

## Required tools

2,5 mm Allen wrench.

## How to adjust the Light Pipe Zoom Lens?

1. Release the hexagon socket head cap screw (reference 1 of Image 10–46). Use a 2,5 mm Allen wrench.
2. Start up de projector and display a white test pattern with maximum dimming.

   *Caution:* Projecting a light spot which is larger then the DMD outline for more then 10 seconds may cause irreversible damage to the Sealed Light Processor. Therefor, it is important to maximum dim the light output and adjust the light spot as quickly as possible.

3. Adjust the position of the Light Pipe Zoom Lens by moving the hexagon socket head cap screw (reference 1) as illustrated until the size of the light spot (reference 2) matches the projected outline (reference 3) of the DMDs upon the screen (reference 4).

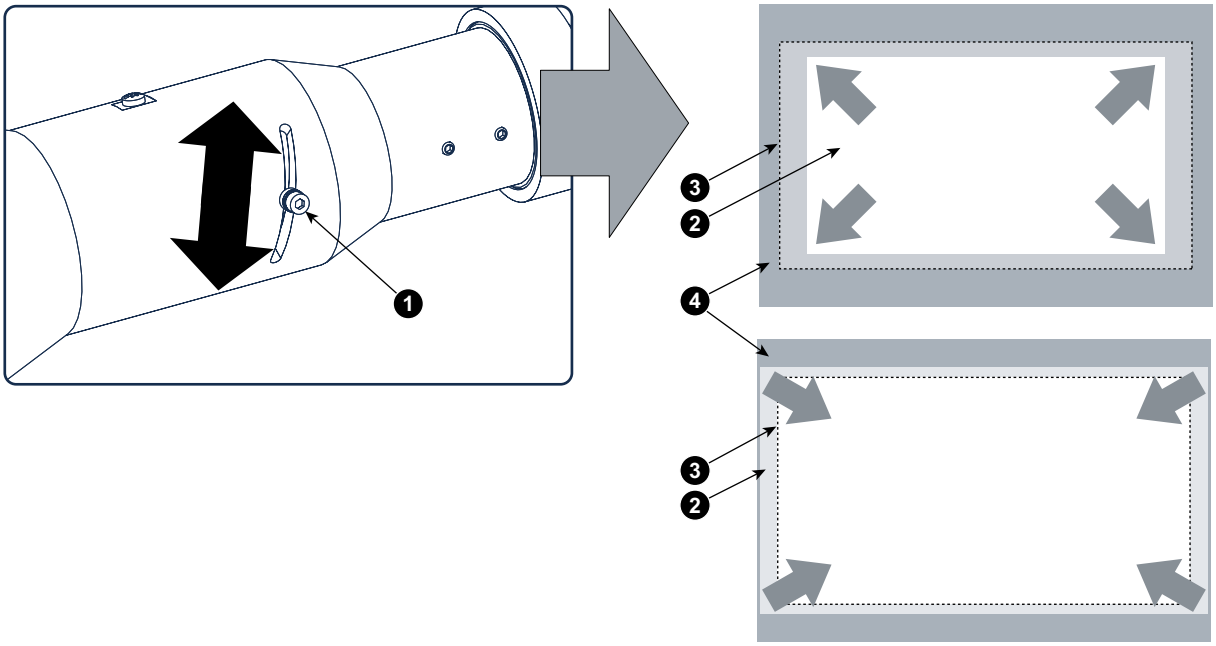


Image 10–46

4. Fasten the hexagon socket head cap screw. User a 2,5 mm Allen wrench.

# 10.19 Adjusting the Light Pipe Zoom Lens (Second generation Light Pipe)

## Purpose of the Light Pipe Zoom Lens

The Light Pipe Zoom Lens is located inside the Light Pipe between the Integration Rod and the Fold Mirror. The light spot upon the DMDs can be reduced or enlarged with the Light Pipe Zoom Lens to fit with the outline of the DMDs.

The cover of the Light Processor has to be removed from the projector to adjust the Light Pipe Zoom Lens. This procedure assumes that the this cover is already removed from the projector.

## Required tools

2,5 mm Allen wrench.

## How to adjust the Light Pipe Zoom Lens?

1. Release the hexagon socket head cap screw (reference 1 of Image 10–47). Use a 2,5 mm Allen wrench.
2. Start up de projector and display a white test pattern with maximum dimming.

   *Caution:* Projecting a light spot which is larger then the DMD outline for more then 10 seconds may cause irreversible damage to the Sealed Light Processor. Therefor, it is important to maximum dim the light output and adjust the light spot as quickly as possible.

3. Adjust the position of the Light Pipe Zoom Lens by moving the hexagon socket head cap screw (reference 1) as illustrated until the size of the light spot (reference 2) matches the projected outline (reference 3) of the DMDs upon the screen (reference 4).

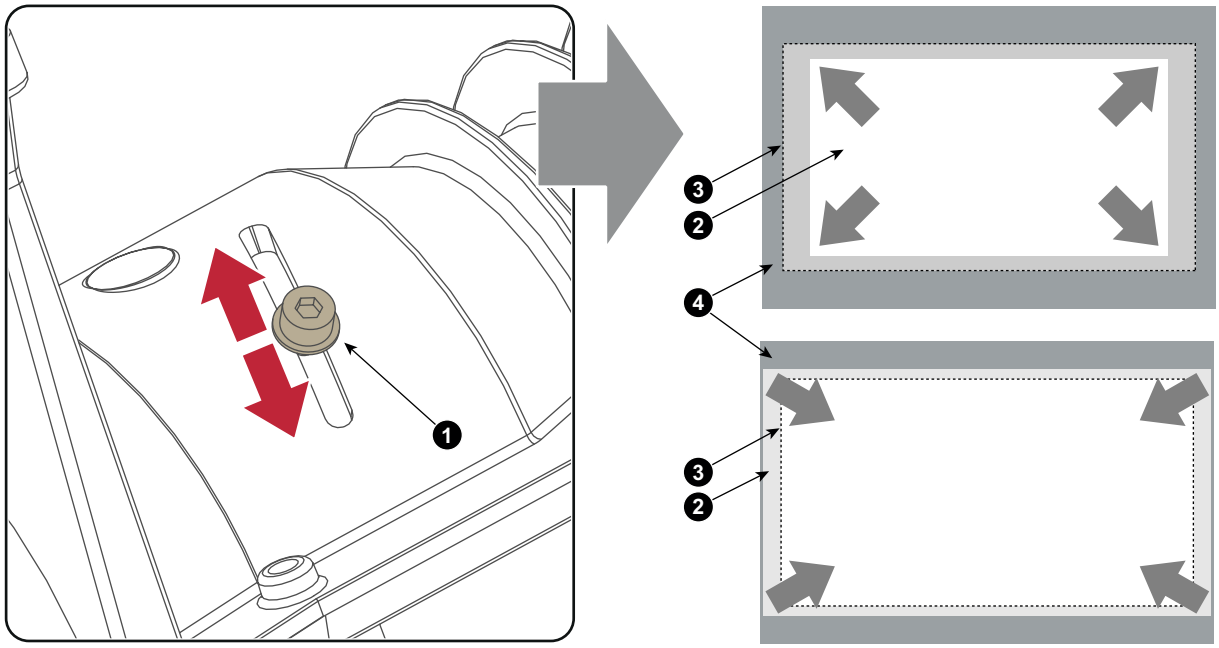


Image 10–47

4. Fasten the hexagon socket head cap screw. User a 2,5 mm Allen wrench.

# 10.20 Adjusting the Notch Filter (First generation Light Pipe)

## Purpose of the Notch Filter

The Notch Filter is a coated glass plate located at the end of the Light Pipe assembly. The Notch Filter applies some small color corrections of the light coming out of the Light Pipe, which is emitted by the light source of the projector. This is done to achieve an optimal color calibration of the native colors. The Notch Filter can slightly turn, with respect to the light path, which allows a small adjustment of the native colors. Note that, next to the pure optical color calibration by the Notch Filter there is also a software color calibration.

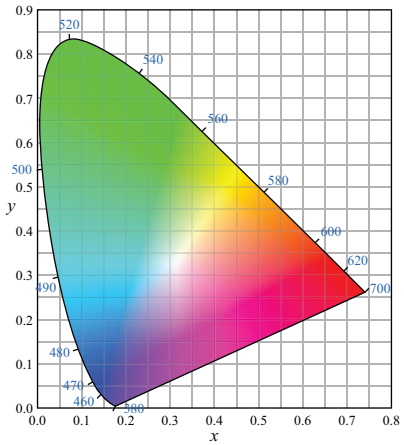


Image 10–48 Color triangle.

## Target range for x, y Chroma values

- **Uncorrected GREEN:** (changes together with red)
  - x : 0.245 – 0.285
  - y : 0.67 – 0.71
- **Uncorrected RED:** (changes together with green)
  - x : 0.67 – 0.69
  - y : 0.31 – 0.33
- **Uncorrected BLUE:** (no impact)
  - x : 0.12 – 0.16
  - y : 0.02 – 0.8

To access the Notch Filter the left side cover has to be removed from the projector. This procedure assumes that the left side cover is already removed from the projector.

## Required tools

- 6 mm open-end wrench.
- Colorimeter (e.g. CS-200 chroma meter from Konica Minolta or the PR-650 SpectraScan® from Photo Research)

## How to adjust the Notch Filter?

1. Release the lock nut (reference 1) of the Notch Filter. Use for that a 6 mm open-end wrench.

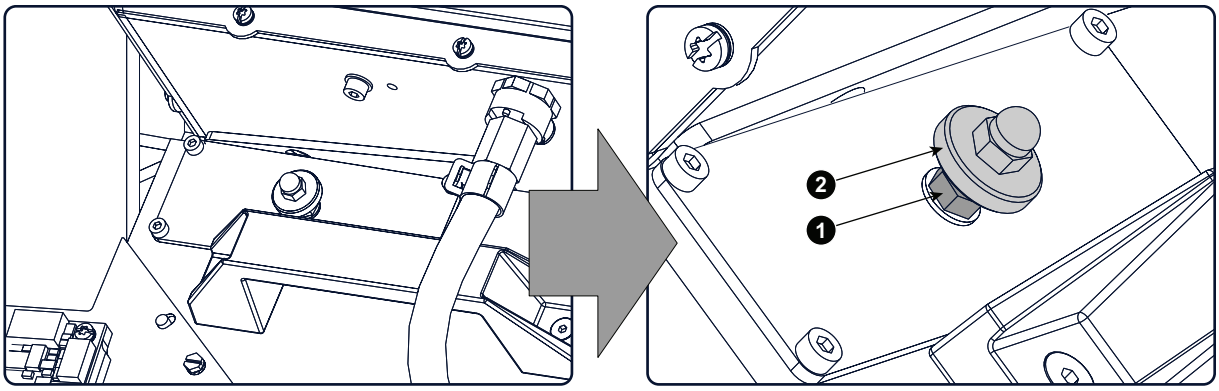


Image 10–49

2. Start up the projector and display an uncorrected RED test pattern.

   *Tip:* See user guide of the Communicator software for detail instructions about color calibration

3. Measure the X and Y values of the projected RED test pattern. Use for that a colorimeter. Make sure that the RED test pattern is uncorrected.

4. Slightly rotate the thumb screw (reference 2 of Image 10–49) of the Notch Filter until the measured X and Y values for RED are within the required specs (see above).

   *Note:* The adjustment range of the Notch Filter is limited. For most projectors the mid position of the thumbscrew gives also the most optimal result.

5. Fasten the lock nut, reference 1 of Image 10–49, to secure the position of the Notch Filter. Use for that a 6 mm open-end wrench. Make sure that the position of the Notch Filter remains unchanged while fastening the lock nut.

# 10.21 Adjusting the Notch Filter (Second generation Light Pipe)

## Purpose of the Notch Filter

The Notch Filter is a coated glass plate located at the end of the Light Pipe assembly. The Notch Filter applies some small color corrections of the light coming out of the Light Pipe, which is emitted by the light source of the projector. This is done to achieve an optimal color calibration of the native colors. The Notch Filter can slightly turn, with respect to the light path, which allows a small adjustment of the native colors. Note that, next to the pure optical color calibration by the Notch Filter there is also a software color calibration.

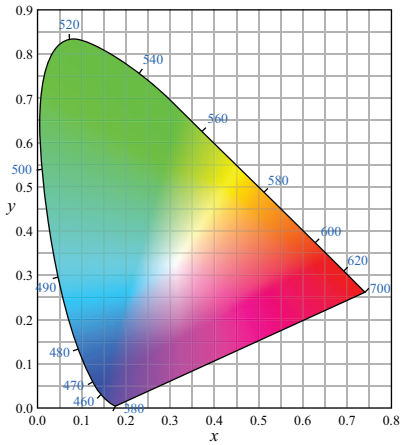


Image 10–50 Color triangle.

## Target range for x, y Chroma values

- **Uncorrected GREEN:** (changes together with red)
  - x : 0.245 – 0.285
  - y : 0.67 – 0.71
- **Uncorrected RED:** (changes together with green)
  - x : 0.67 – 0.69
  - y : 0.31 – 0.33
- **Uncorrected BLUE:** (no impact)
  - x : 0.12 – 0.16
  - y : 0.02 – 0.8

To access the Notch Filter the left side cover has to be removed from the projector. This procedure assumes that the left side cover is already removed from the projector.

## Required tools

- 6 mm open-end wrench.
- Colorimeter (e.g. CS-200 chroma meter from Konica Minolta or the PR-650 SpectraScan® from Photo Research)

## How to adjust the Notch Filter?

1. Release the adjustment screw (reference 2 Image 10–51) of the Notch Filter a few turns. Use for that a 2.5mm Allen wrench.

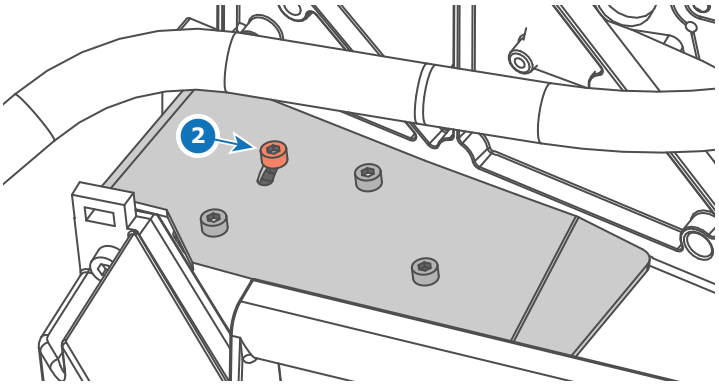


Image 10–51

2. Start up the projector.
3. Display an uncorrected RED test pattern.

   *Tip:* See user guide of the Communicator software for detail instructions about color calibration

4. Measure the x and y values of the projected RED test pattern. Use for that a colorimeter. Make sure that the RED test pattern is uncorrected.
5. Slightly move the adjustment screw (reference 2) of the Notch Filter to a position until the measured x and y values for RED are within the required specs (see above).
6. Display an uncorrected GREEN test pattern.
7. Measure the x and y values of the projected GREEN test pattern. Use for that a colorimeter. Make sure that the GREEN test pattern is uncorrected.
8. Slightly move the adjustment screw (reference 2) of the Notch Filter to a position until the measured x and y values for GREEN are within the required specs (see above).
9. Repeat from step 3 until no adjustment is required and all measured x and y values for RED and GREEN are within the required specs (see above).
10. Fasten the adjustment screws (reference 2) to secure the position of the Notch Filter. Use for that a 2.5mm Allen wrench. Make sure that the position of the Notch Filter remains unchanged while fastening the screw.

# 10.22 Cleaning the Notch Filter

## When should one clean the Notch Filter?

Only clean the Notch Filter in case it is really necessary. This means in case dust is clearly visible upon the surface of the Notch Filter.



This procedure requires removal of the Notch Filter.

## Required tools

- Compressed air.
- Clean Toraysee® cloth or any micro fiber lens cleaning cloth.
- Clean cotton cloth.

## Required parts

Lens cleaner (e.g. Carl Zeiss lens cleaner or Purasol® or any waterbased lens cleaner)

## How to clean the Notch Filter?

1. Blow off dust with clean compressed air (or pressurized air cans).
2. Clean with lens cleaner together with a clean lens cleaning cloth to remove the dust and contamination. Use big wipes.
3. Use a dry lens cleaning cloth to remove left liquid or stripes. Polish with small circles.
4. If there are still fingerprints on the surface, wipe them off with lens cleaner together with a clean lens cleaning cloth. Polish again with a dry one.

# 10.23 Cleaning the Prism exit side

## When should one clean the Prism exit side?

Clean the Prism exit on a regular basis to maintain light output level.

This procedure requires that the lens is removed from the projector.

## Required tools

- Compressed air.
- Clean Toraysee® cloth or any micro fiber lens cleaning cloth.

## Required parts

Lens cleaner (e.g. Carl Zeiss lens cleaner or Purasol® or any water based lens cleaner)

## How to clean the Prism exit side?

1. Wipe off the dust of the Prism exit. Use for that a dry and clean Lens cleaning cloth.

   *Tip:* Limit the number of wipe movements. This to protect the optical coating. It is better to wipe off the dust with one good wipe movement than with 10 soft wipe movements.

2. Is all dust removed from the Prism exit?

   ► If yes, stop this cleaning procedure.

   ► If no, wipe off the dust of the Prism exit with lens cleaner and a clean lens cleaning cloth. Polish again with a dry one.

# 10.24 Replacement of the Light Sensor Module (First generation Light Pipe)

## Purpose of the Light Sensor in the Light Pipe

To obtain a Constant Light Output (CLO) from the projector a Light Sensor is mounted just behind the Fold Mirror. On a regular base the controller of the projector reads the measured values of this Light Sensor and, if required, sends corrective information to the Lamp Power Supply (LPS).

The cover of the Light Processor has to be removed from the projector to replace the Light Sensor Module. This procedure assumes that this cover is already removed from the projector.

## Required tools

- 5.5mm nut driver.
- Light meter.

## How to replace the Light Sensor Module of the Light Processor?

1. Disconnect the wire unit (reference 1 Image 10–52) from the Light Sensor Module.

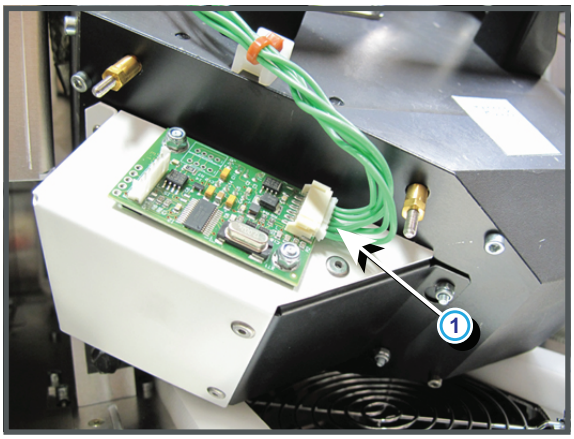


Image 10–52

2. Remove the Light Sensor Module by loosening the two nuts (reference 2 Image 10–53). Use a 5.5mm nut driver.

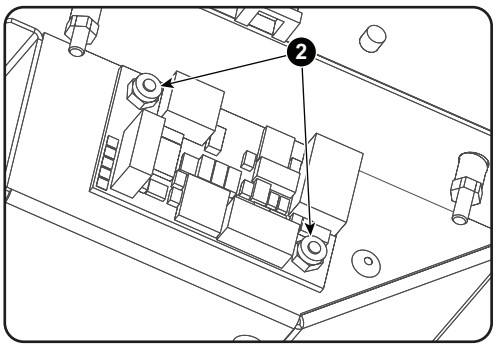


Image 10–53

3. Install a new Light Sensor Module. Use a 5.5mm nut driver to fasten both screws (reference 2 Image 10–53).
4. Reconnect the wire unit (reference 1 Image 10–52) with Light Sensor Module.
5. Place a light meter in the center of the screen and calibrate the Light Sensor Module. For detailed instructions see user guide of the Projector Toolset software.

# 10.25 Replacement of the Light Sensor Module (Second generation Light Pipe)

## Purpose of the Light Sensor in the Light Pipe

To obtain a Constant Light Output (CLO) from the projector a Light Sensor is mounted just behind the Fold Mirror. On a regular base the controller of the projector reads the measured values of this Light Sensor and, if required, sends corrective information to the Lamp Power Supply (LPS).

The cover of the Light Processor has to be removed from the projector to replace the Light Sensor Module. This procedure assumes that this cover is already removed from the projector.

## Required tools

- 5.5mm nut driver.
- Light meter.

## How to replace the Light Sensor Module of the Light Processor?

1. Disconnect the wire unit (reference 1 Image 10–54) from the Light Sensor Module.

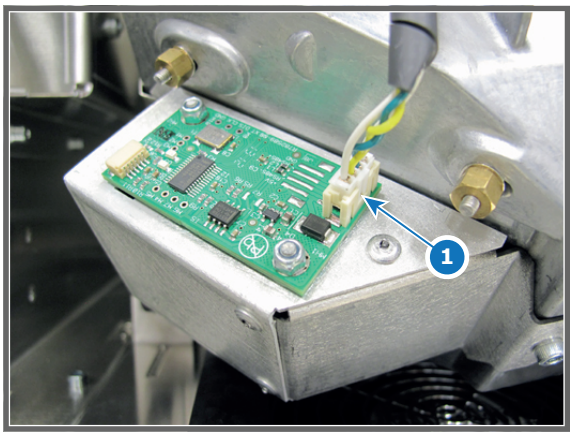


Image 10–54

2. Remove the Light Sensor Module by loosening the two nuts (reference 2 Image 10–55). Use a 5.5mm nut driver.

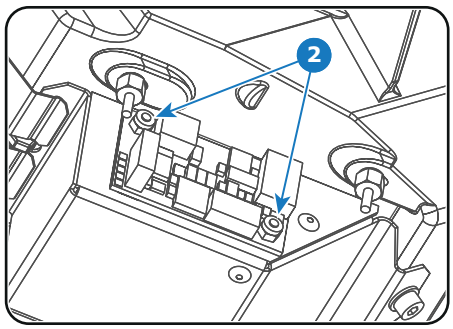


Image 10–55

3. Install a new Light Sensor Module. Use a 5.5mm nut driver to fasten both screws (reference 2 Image 10–55).
4. Reconnect the wire unit (reference 1 Image 10–54) with Light Sensor Module.
5. Place a light meter in the center of the screen and calibrate the Light Sensor Module. For detailed instructions see user guide of the Projector Toolset software.

# 10.26 Replacement of the Notch Filter (First generation Light Pipe)

To access the Notch Filter the left side cover has to be removed from the projector. This procedure assumes that the left side cover is already removed from the projector.

## Matching Notch Filter

On the front side of the Light Processor either a Green, Red, Yellow or no colored dot is applied. (green, red or yellow). The Notch Filter has only a Green or a Red colored dot.

| Light Processor | → | Matching Notch Filter |
|---|---|---|
| GREEN | → | GREEN |
| RED | → | RED |
| YELLOW | → | GREEN or RED |
| No colored dot. | → | GREEN |

## Notch filter kit: Adapt Notch Filter Assembly for First generation Light Pipe

Adaptation of the Notch filter assembly in the kit for use in first generation light pipe.

Assembly instructions.

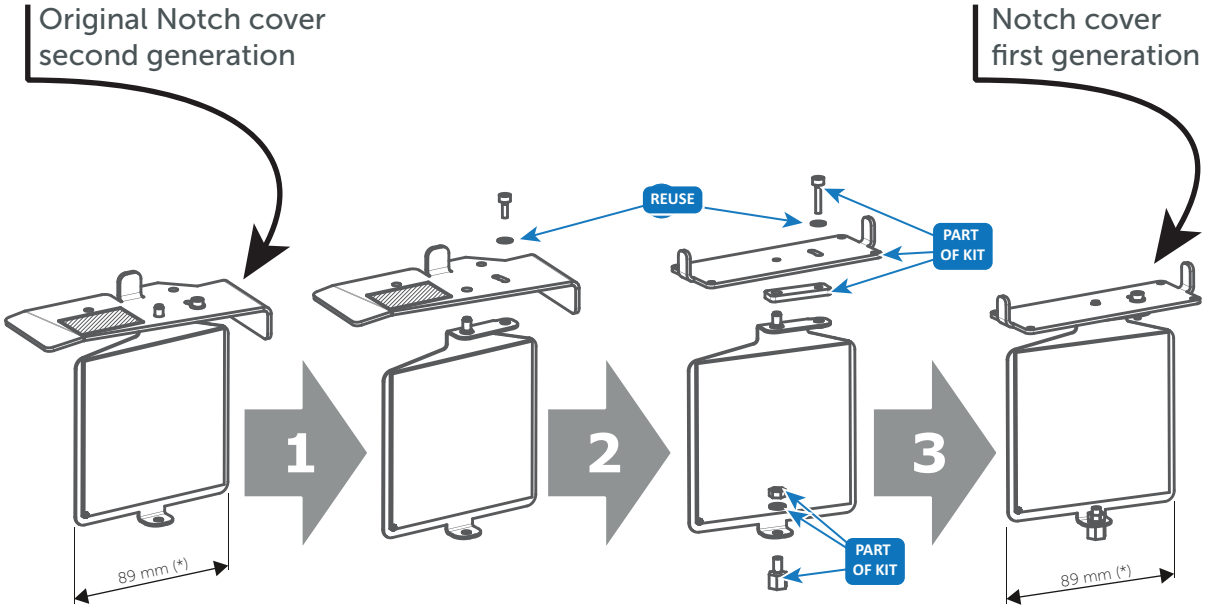


Image 10–56

Instructions are only applicable for parts in this kit.

## Required tools

2,5 mm Allen wrench.

## How to replace the Notch Filter?

1. Remove the Notch Filter from the Light Pipe by releasing the four hexagon head cap screws (reference 1 Image 10–57) as illustrated. Use for that a 2,5 mm Allen wrench.

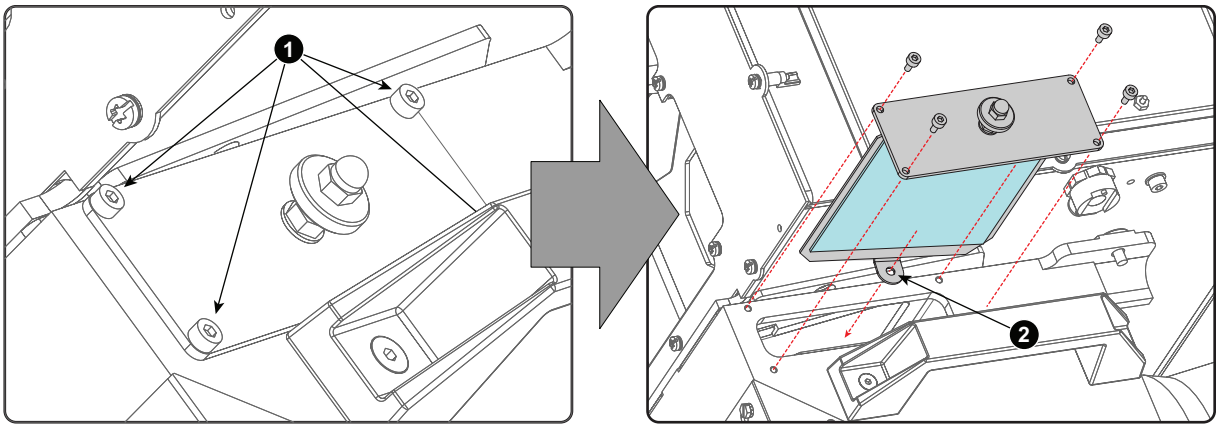


Image 10–57

2. Insert a new Notch Filter. Make sure that the positioning hole (reference 2 Image 10–57) of the Notch Filter fits upon its positioning pin inside the Light Pipe.

   *Caution:* Do not touch the Notch Filter with bare fingers. To clean the Notch Filter see procedure “Cleaning the Notch Filter”, page 265.

3. Fasten the Notch Filter with four hexagon head cap screws (reference 1). Use for that a 2,5 mm Allen wrench.

4. Readjust the Notch Filter. See procedure “Adjusting the Notch Filter (First generation Light Pipe)”, page 261.

# 10.27 Replacement of the Notch Filter (Second generation Light Pipe)

To access the Notch Filter the left side cover has to be removed from the projector. This procedure assumes that the left side cover is already removed from the projector.

## Matching Notch Filter

On the front side of the Light Processor either a Green, Red, Yellow or no colored dot is applied. (green, red or yellow). The Notch Filter has only a Green or a Red colored dot.

| Light Processor | → | Matching Notch Filter |
|---|---|---|
| GREEN | → | GREEN |
| RED | → | RED |
| YELLOW | → | GREEN or RED |
| No colored dot. | → | GREEN |

## Required tools

2,5 mm Allen wrench.

## How to replace the Notch Filter?

1. Remove the Notch Filter from the Light Pipe by releasing the two hexagon head cap screws (reference 1 Image 10–58) as illustrated. Use for that a 2,5 mm Allen wrench.
2. Insert a new Notch Filter. Make sure that the positioning hole of the Notch Filter fits upon its positioning pin inside the Light Pipe.

   *Caution:* Do not touch the Notch Filter with bare fingers. To clean the Notch Filter see procedure “Cleaning the Notch Filter”, page 265.

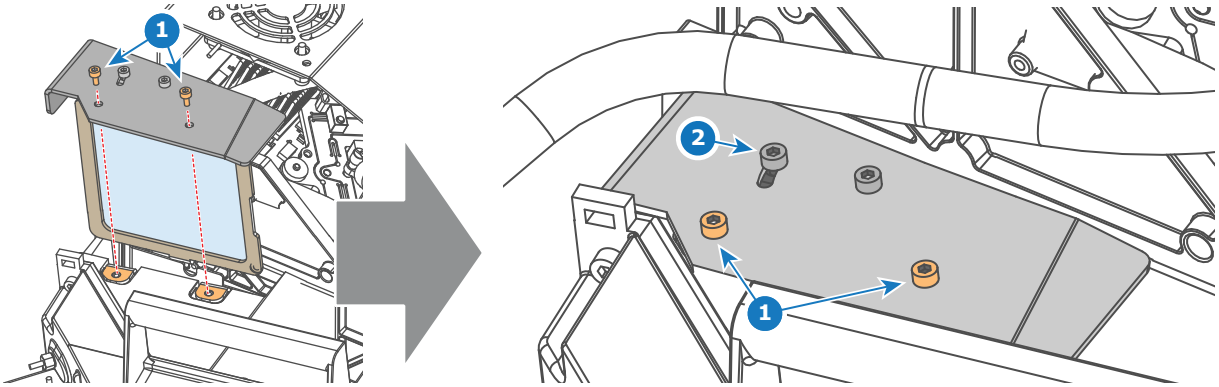


Image 10–58

3. Fasten the Notch Filter with two hexagon head cap screws (reference 1 Image 10–58). Use for that a 2,5 mm Allen wrench.
4. Readjust the Notch Filter (adjustment screw reference 2 Image 10–58). See procedure “Adjusting the Notch Filter (Second generation Light Pipe)”, page 263.

# 10.28 Replacement of the Dowser (Shutter)

## Dowser

The Dowser (Shutter) of the projector is mounted upon the Light Processor just above the light output path of the Prism. The Dowser assembly has an “open” and a “close” state. In the “close” state the Dowser blade shuts off the light beam between the Light Processor (DMD’s) and lens. In the “open” state, the Dowser blade is retracted from the light path. Note that the local keypad has a dedicated button “DOWSER” to operate the dowser.

The Lens and the Light Processor have to be removed from the projector before replacing the Dowser. This procedure assumes that the Light Processor is already removed from the projector.

## Required tools

2.5mm Allen wrench.

## How to replace the dowser of the Light Processor

1. Disconnect the wire unit (reference 1) of the dowser.

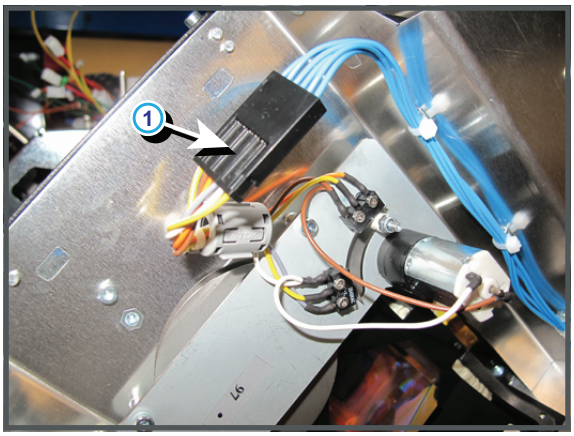


Image 10–59

2. Remove the dowser assembly from the Light Processor be releasing the three hexagon socket head cap screws (reference 2) as illustrated. Use a 2,5 mm Allen wrench.

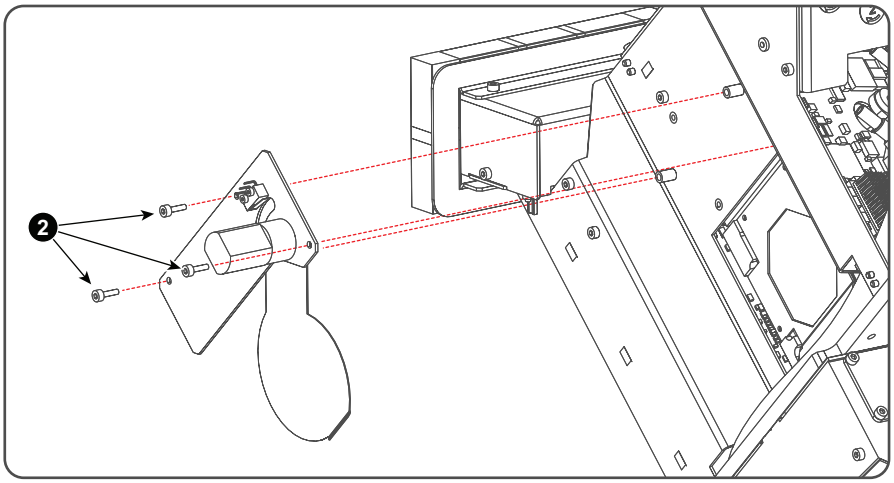


Image 10–60

3. Place a new dowser assembly in position and fasten with three hexagon socket head cap screws (reference 2 Image 10–60). Use a 2,5 mm Allen wrench.
4. Reconnect the wire unit of the dowser (reference1 Image 10–59).

# Spatial Color Calibration (LUT-SCC) 11

11.1 Introduction to SCC file ..... 274
11.2 Obtain the Serial Number of the installed Light Processor ..... 275
11.3 Download the LUT-SCC file from the Barco website ..... 276
11.4 Upload Spatial Color Calibration file ..... 278
11.5 Activate Spatial Color Calibration file ..... 279

## About this chapter

This chapter explains how to obtain the correct LUT-SCC file and how to install it after having replaced the Light Processor or ICMP/ICP board.

# 11.1 Introduction to SCC file

## Introduction

Barco has introduced the Spatial Color Calibration (SCC) file on the DP2K and DP4K B series digital projectors. The SCC file contains information to improve the color uniformity of the image. The uniformity is measured in the factory and stored in a LUT-SCC file on the ICP board. This LUT-SCC file is activated on the projector at factory.

## Impact on service

As the LUT-SCC file is Light Processor specific, when replacing the **Light Processor** of the projector a **new LUT-SCC file** has to be uploaded and set as active file. As the LUT-SCC file is stored on the Integrated Cinema Processor (located on the **ICMP or ICP** board) the **LUT-SCC file** should be uploaded and activated after replacement of the ICMP or ICP board.

This chapter explains how to obtain the correct LUT-SCC file and how to install it after having replaced the Light Processor or ICMP/ICP.

**Communicator** version **4.7.8** (1) or later is required to activate LUT-SCC files.

1. For DP4K-P and DP2K-S the SCC functionality is already incorporate in the Communicator version 4.7.3

# 11.2 Obtain the Serial Number of the installed Light Processor

### How to obtain the Serial Number of the installed Light Processor?

1. Remove the Lens from the projector.
2. Write down the Serial Number of the Light Processor. The label with Serial Number of the Light Processor (reference 1 Image 11–1) is visible through the Lens Holder opening. The label is located at the front base of the Light Processor.

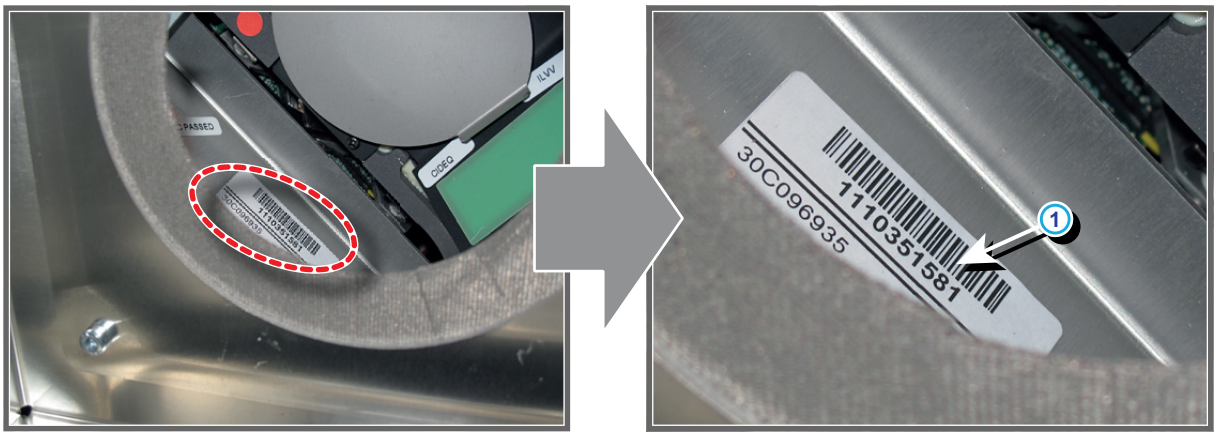


Image 11–1 Location label with Serial Number of the Light Processor of a DP4K-P projector.

The position of the label with Serial Number of the Light Processor may be slightly different. However, it will always be located at the front base of the Light Processor.

# 11.3 Download the LUT-SCC file from the Barco website

A logon ID is required to access the secured zone **myBarco** on the Barco website *https://www.barco.com*. A logon ID for the secured zone can be requested at the portal page of the Barco website.

## Required parts

Serial Number of the installed Light Processor.

## How to download the Spatial Color Calibration file (LUT-SCC) from the secured Barco website?

1. Open the url: *https://www.barco.com* in a web browser.
2. Log in into the secured Barco website.

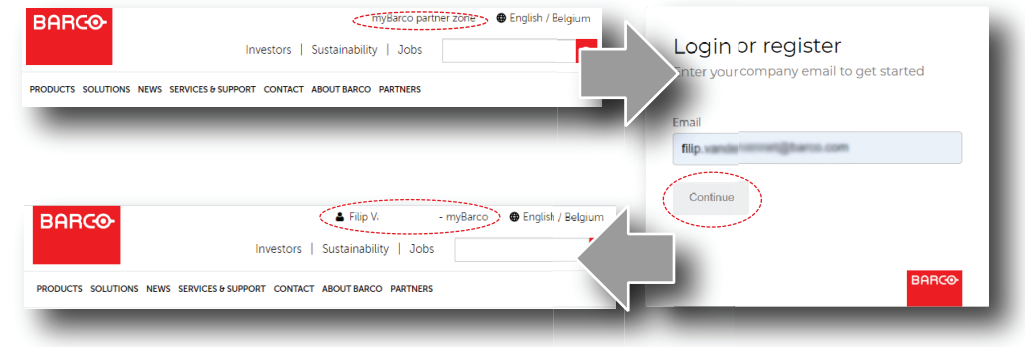


Image 11–2

3. Hover over your login name and select “**My support**”.

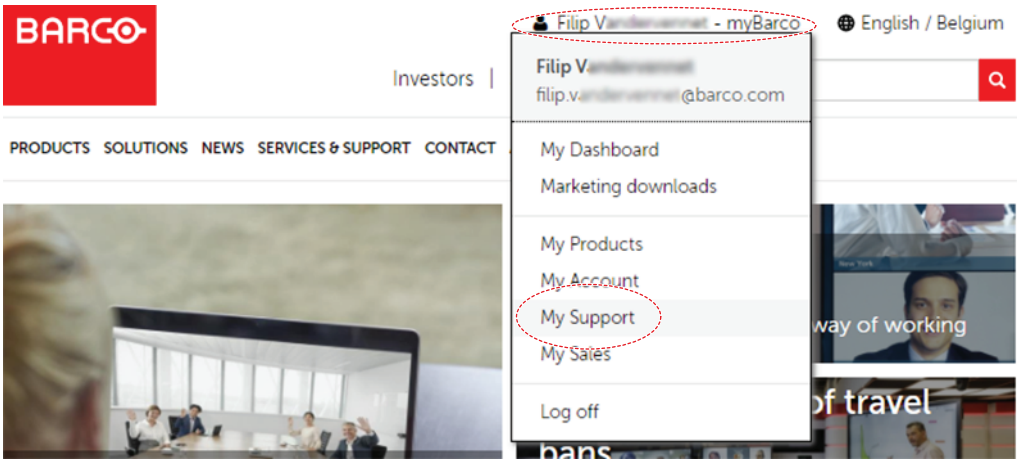


Image 11–3

4. Navigate in the **My Support** tool at the left–hand pane to **Digital Cinema > Spatial color corrections**.
5. Fill in the Serial Number of the Light Processor and press the “**Search file**” button.

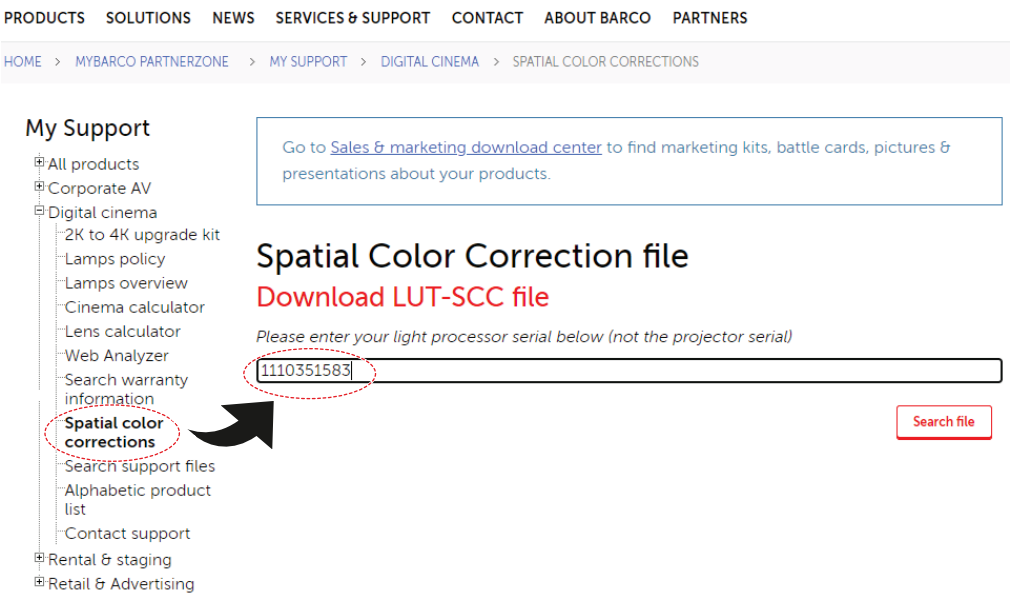


Image 11–4

If a LUT-SCC files is found, a download link will appear. Proceed with the next step.

In case no LUT-SCC file is found end this procedure and use the default LUT-SCC file which is already installed on the ICP board. For 2K projectors this is “ones2K_LE”, for 4K projectors this is “ones4K_LE”.

6. Click on the download link to download the LUT-SCC file.

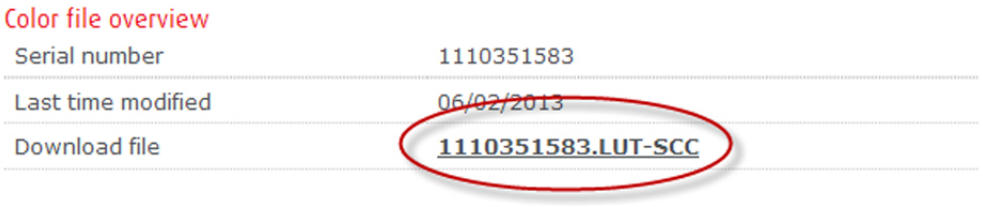


Image 11–5

# 11.4 Upload Spatial Color Calibration file

When replacing the Light Processor a new LUT-SCC file should be downloaded from the secured Barco website.
When replacing the ICP board the LUT-SCC file should be available if the projector files were backed up properly. If not, the LUT-SCC file can also be downloaded from the secured Barco website using the serial number of the installed Light Processor.
For detailed instructions see procedures “Obtain the Serial Number of the installed Light Processor”, page 275, and “Download the LUT-SCC file from the Barco website”, page 276.

## Required tools

Communicator software version 4.7.9 (or later)

## Required parts

- Serial Number of the installed Light Processor.
- LUT-SCC file available on the PC of the Communicator or on USB-stick when using the Communicator Touch Panel.

## How to upload the LUT-SCC file into the projector?

1. Start up the projector and the Communicator (version **4.7.9** [2] or later).
2. Ensure that the projector is connected with the Communicator. Either via a direct connection or via network. For detailed instructions see User Guide of the Communicator (manual version 07).
3. Go to the File manager of the Communicator.
4. Click on the drop down box in *Local files* (1) and browse to the LUT-SCC file to be uploaded (2).

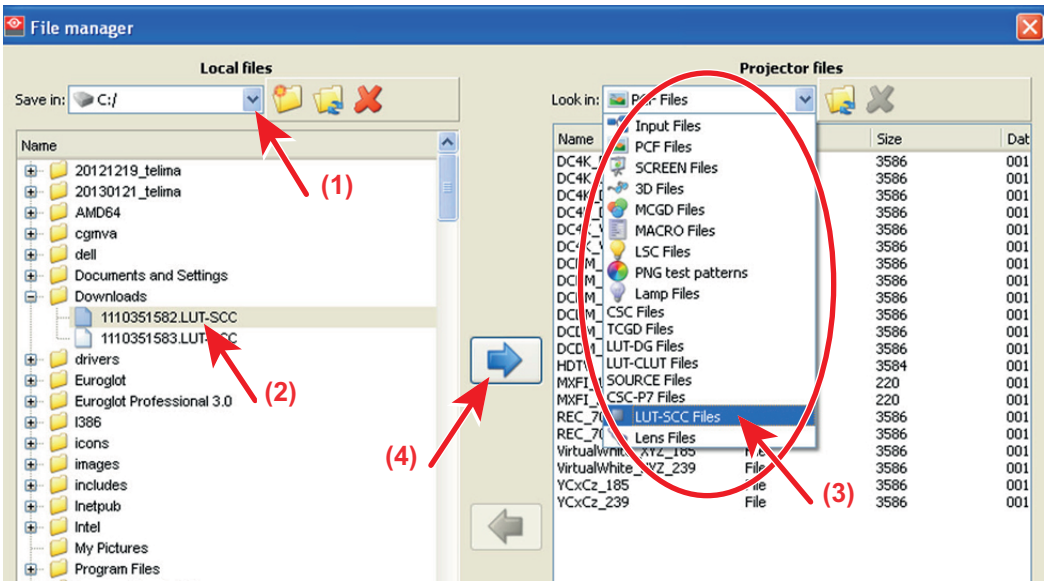

Image 11–6

5. Click on the drop down box in *Projector files* and select the file type LUT-SCC (3).
6. Click on the arrow pointing to the right (4).

   The file is uploaded from its original location to the projector file system.

2. For DP4K-P and DP2K-S the SCC functionality is already incorporate in the Communicator version 4.7.3

# 11.5 Activate Spatial Color Calibration file

## Required tools

Communicator software version 4.7.9 (or later)

## How to activate the LUT-SCC file

1. While *File manager* is selected, click on the drop down box (1) next to *Look in* and select *LUT-SCC files* (2).

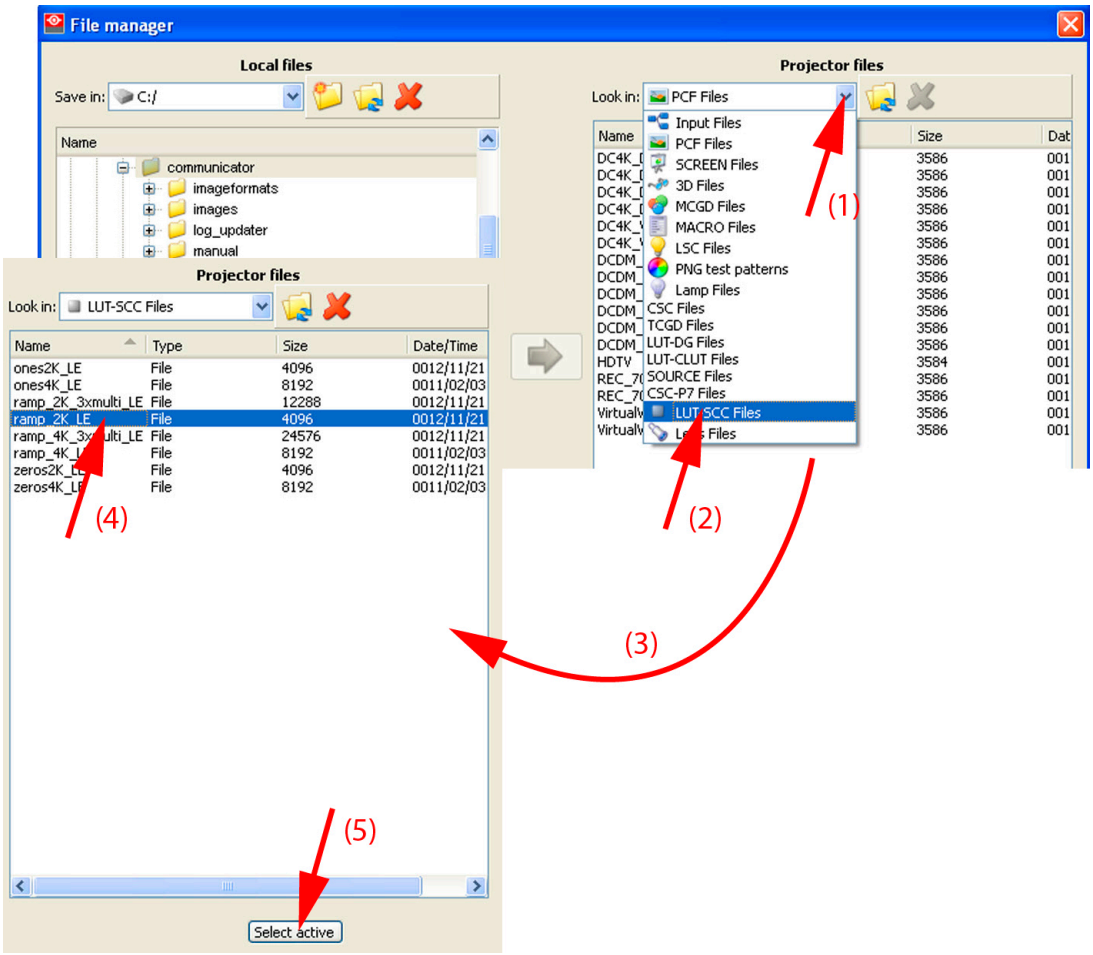


Image 11–7 Activate LUT-SCC file

2. Select the desired file (4).
3. Click **Select active** (5).

In case no Light Processor serial LUT-SCC file is available use the default LUT-SCC file which is factory installed on the ICP board and thus displayed in the list. For 2K projectors this is “ones2K_LE”, for 4K projectors this is “ones4K_LE”.

# Liquid Cooling Circuit 12


12.1 Introduction ..... 283
12.2 Diagnostic ..... 285
12.3 Draining the liquid cooling circuit ..... 287
12.4 Filling the liquid cooling circuit ..... 290
12.5 Removal of the Liquid Cooling assembly ..... 291
12.6 Installation of the Liquid Cooling assembly ..... 294
12.7 Replacement of the Pump (RD to RD) ..... 297
12.8 Replacement of the complete cooling pump with a new model (RD to NRD) ..... 299
12.9 Replacement of the pump (NRD to NRD) ..... 303
12.10 Replacement of the Heat Exchanger ..... 305


## About this chapter

This chapter describes how to diagnose and maintain the liquid cooling circuit of the projector.

**WARNING:** All actions performed on the Liquid Cooling Circuit should occur in normal ambient conditions (approximately 25 °C). The projector should have sufficiently cooled down (minimum 2 hours).

**WARNING:** Only use Barco approved cooling liquid to refill the liquid cooling circuit of the projector. Neglecting this may lead to irreversible damage of the projector.

**WARNING:** Hazardous product: Blue antifreeze diluted 1,2 ethanediol (1/3 ethanediol – 2/3 Demi water).
Not for household use. Keep out of reach of children. Harmful by oral intake. Avoid exposure to pregnant women. Avoid contact with eyes, skin and clothing. Avoid inhalation of the noxious fumes.

## Handling the cooling liquid

- Avoid contact of the liquid with Eyes, Skin and Clothing.
- Avoid inhaling noxious fumes.
- Conserve the product in the original package and in a well ventilated room.

## Personal protection rules

- Handle the cooling liquid in a well ventilated room.
- Under no circumstances eat, drink and smoke while handling the liquid.

- Wear gloves (Butyl rubber, PVC....) and Goggles.
- Wear suitable protection clothing.



For more detailed information, “Safety precautions Hazardous Chemicals”, page 15

# 12.1 Introduction

## Functionality

Much heat has to be extracted from the DMD's and from the light pipe entrance during operation of the projector. The liquid cooling circuit takes care of this. The liquid cooling circuit is a closed loop of flexible tubing comprising of a pump, three cooling blocks for the DMD's, a cooling block for the light pipe entrance, a heat exchanger, and a reservoir. The cooling liquid inside the circuit absorbs the heat of the cooling blocks. Via the pump, the heated-up liquid is transported to the heat exchanger, which in turn cools down the liquid.

## Parts of the liquid cooling circuit

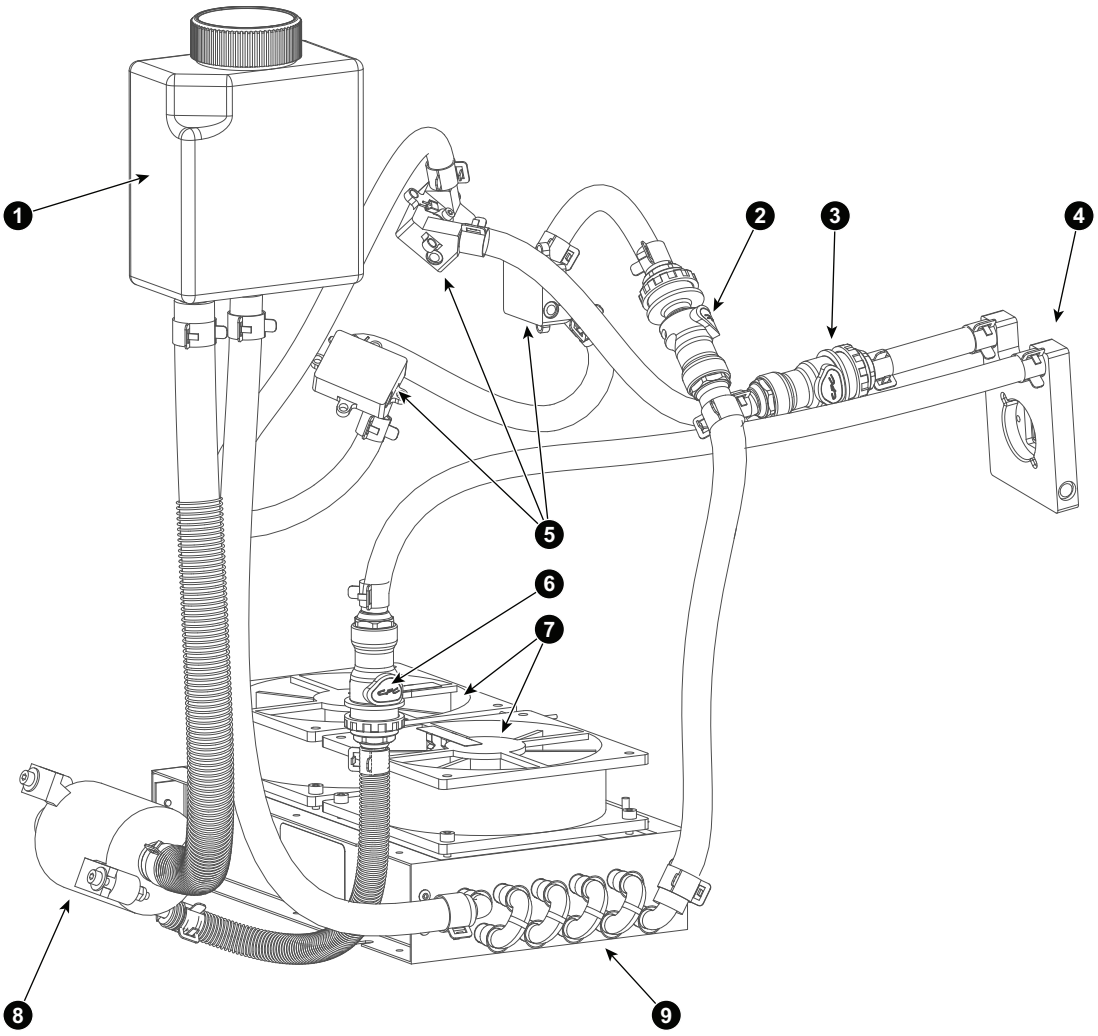


Image 12–1

1 Reservoir.
2 Valved fitting between Light Processor and Heat Exchanger entrance.
3 Valved fitting between Light Processor DMD cooling blocks and Rod cooling block.
4 Cooling block Rod.
5 Cooling blocks DMD's.
6 Valved fitting between Rod cooling block and pump exit.
7 Fans of Heat Exchanger.
8 Pump.
9 Heat Exchanger.

## Tools used in the liquid cooling servicing procedures

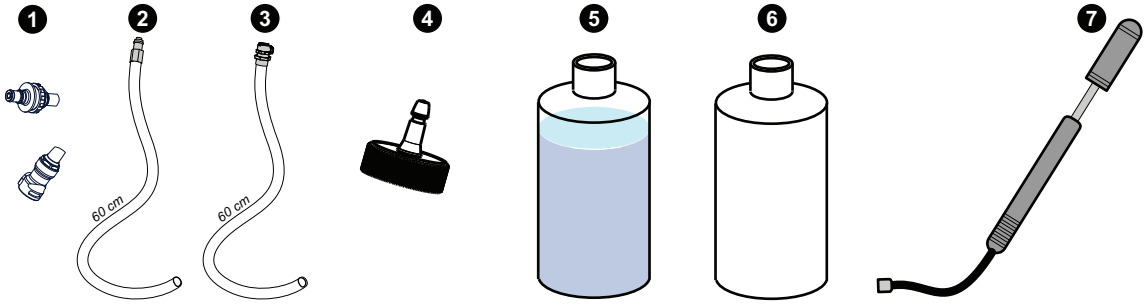


Image 12–2

1 Female and male connector (second version).
2 Tube 60 cm with male connector (of the first version).
3 Tube 60 cm with female connector (of the first version).
4 Filler cap with pressure valve.
5 Bottle with cooling liquid (1 liter).
6 Empty bottle (volume 1 liter).
7 Air pump with Shrader type air hose fitting.

Depending on your projector type, the connectors to the cooling liquid circuit must be of the first or second version. Replace the connectors installed on the tubes (with the second version connectors in the kit) if they don't fit your cooling liquid circuit.

The air hose fitting of the air pump must be of the **Shrader** valve type (A) to match with the pressure vessel, so the Presta valve type (B) has to be removed. Futhermore, the pin (C) inside the Shrader valve has to be removed as well.

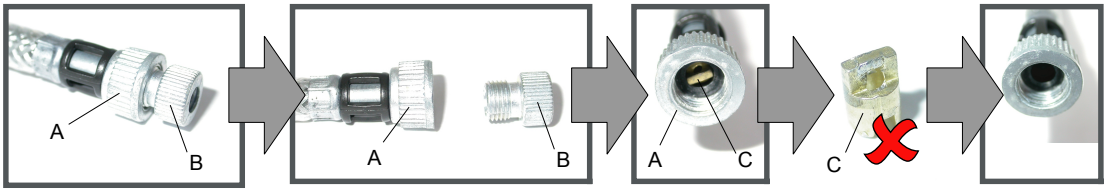

# 12.2 Diagnostic

## General

Over extended periods there may be small losses of liquid in the cooling system of the projector (evaporation). It is therefor recommended to check the reservoir of the cooling circuit at regular intervals.

**CAUTION:** Ensure the level of the liquid in the reservoir is between the Min and Max indicators.

## Troubleshooting cooling loop

- As critical components rely on this liquid cooling, it is essential that any leakage is detected timely.
- Periodic checking of the level of the liquid is essential to guarantee overall good performance of the projector and the pump.

## Too high ambient temperature

| Possible cause | Solution |
|---|---|
| Ambient temperature of the projector is too high. | Measure the ambient temperature nearby the projector. In case the measured temperature is higher than 35°C (95°F) take the necessary measurements to ensure that the ambient temperature is below 35°C (95°F). |
| Blocked filter of the heat exchanger. | Clean the blocked filter. |

## One of the DMD's is too high in temperature

| Possible cause | Solution |
|---|---|
| Malfunction Peltier element of the involved DMD. Only one DMD is too high in temperature while the other two DMD's have a normal and almost equal temperature. | No custom serviceable parts inside the Light Processor. Take contact with a Barco service center to return the Sealed Light Processor. |
| The wire units of two Peltier elements or there respective temperature sensors (NTC's) have been swapped. While the temperature of one DMD is too high, the other will most likely be to low. | No custom serviceable parts inside the Light Processor. Take contact with a Barco service center to return the Sealed Light Processor. |
| Poor assembly of DMD or Peltier + cooler block. | Take contact with a Barco service center to return the Light Processor. |

## All DMD's are too high in temperature

| Possible cause | Solution |
|---|---|
| The Liquid Cooling Circuit of the Light Processor is mistakenly excluded from the main liquid cooling circuit. | Check of the cooling circuit of the Light Processor is connected with the pump and heat exchanger. |
| None of the wire units of the Peltier elements or there respective temperature sensors (NTC's) are connected. | Check of all wire units of the Light Processor are connected with the Signal Backplane. |
| Blocked filter of the heat exchanger. | Clean the blocked filter. |

## No flow of the cooling liquid

| Possible cause | Solution |
|---|---|
| Interruption of the Liquid Cooling Circuit. | Check if the loop of the Liquid Cooling Circuit is closed. |
| The liquid cooling circuit of the Light Processor is mistakenly excluded from the main liquid cooling circuit. Most likely the DMD temperatures are too high. | Check of the cooling circuit of the Light Processor is connected with the pump and heat exchanger. |
| No or insufficient liquid inside the cooling circuit. | Fill the cooling circuit with liquid. |
| The pump of the water cooling is electrical disconnected. | Check if the wire unit of the pump is properly connected. |
| Malfunction pump of the cooling circuit. You don't feel any vibrations when touching the pump after activating the “Refill mode” via the Projector Toolset software. | 1. Check the electrical resistance of the pump winding. Replace the pump if infinite.<br>2. Drain the liquid cooling circuit, open the pump and check if the pump rotor is not blocked. If so, remove the rotor and clean the bearings of the pump. |
| Defect pump. When the projector is running, you don't feel any vibrations when touching the pump. | Drain the Liquid Cooling Circuit, replace the pump, and refill the Liquid Cooling Circuit. |

# 12.3 Draining the liquid cooling circuit

## How to drain

1. Remove the filler cap.

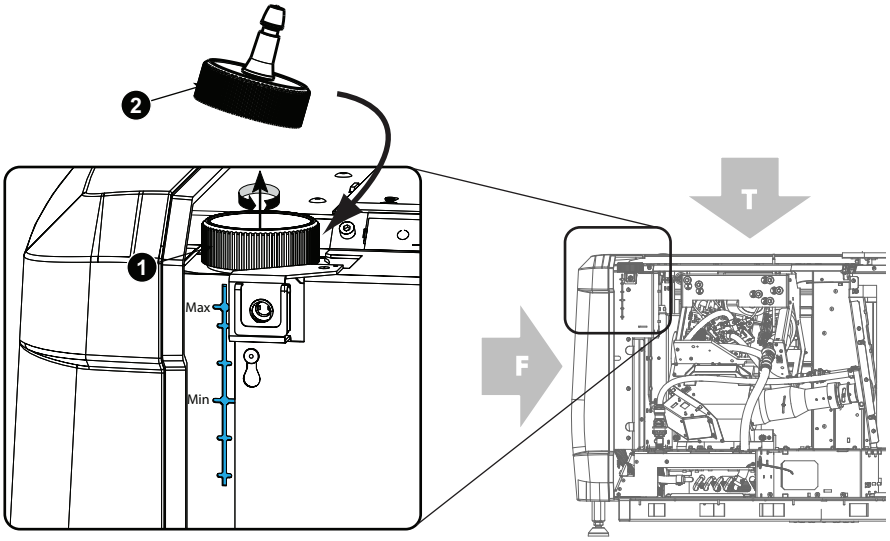


Image 12–3 Filler cap replacement

2. Turn the filler cap with pressure valve, out of the cooling refill kit, on the reservoir.
3. Interrupt the liquid cooling circuit by uncoupling the valved fitting in the tube coming from the pump to the rod entrance cooling block.

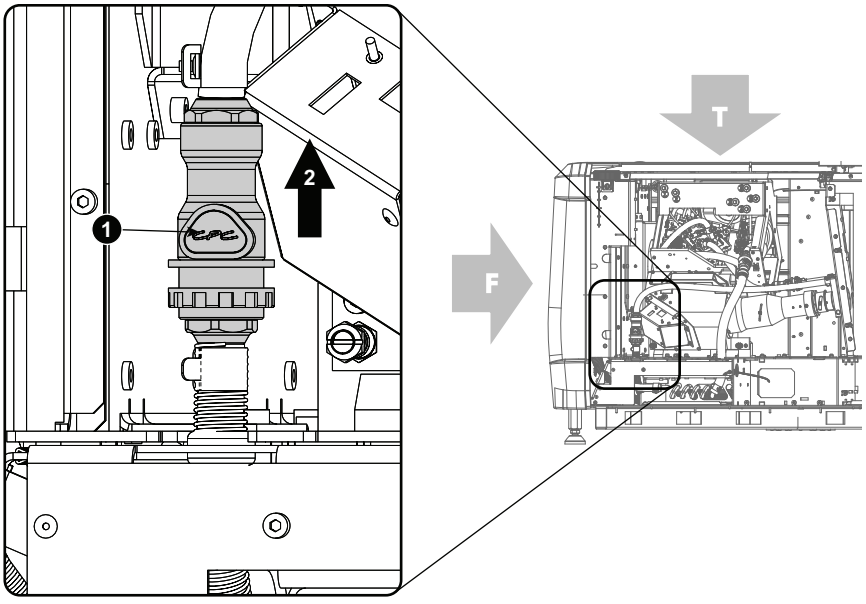


Image 12–4 Interrupt cooling circuit

4. Take a 60 cm tube with male connector and connect to the female fitting (tube coming from the rod entrance cooling block) (3).

   Insert the open end of the tube into an empty bottle.

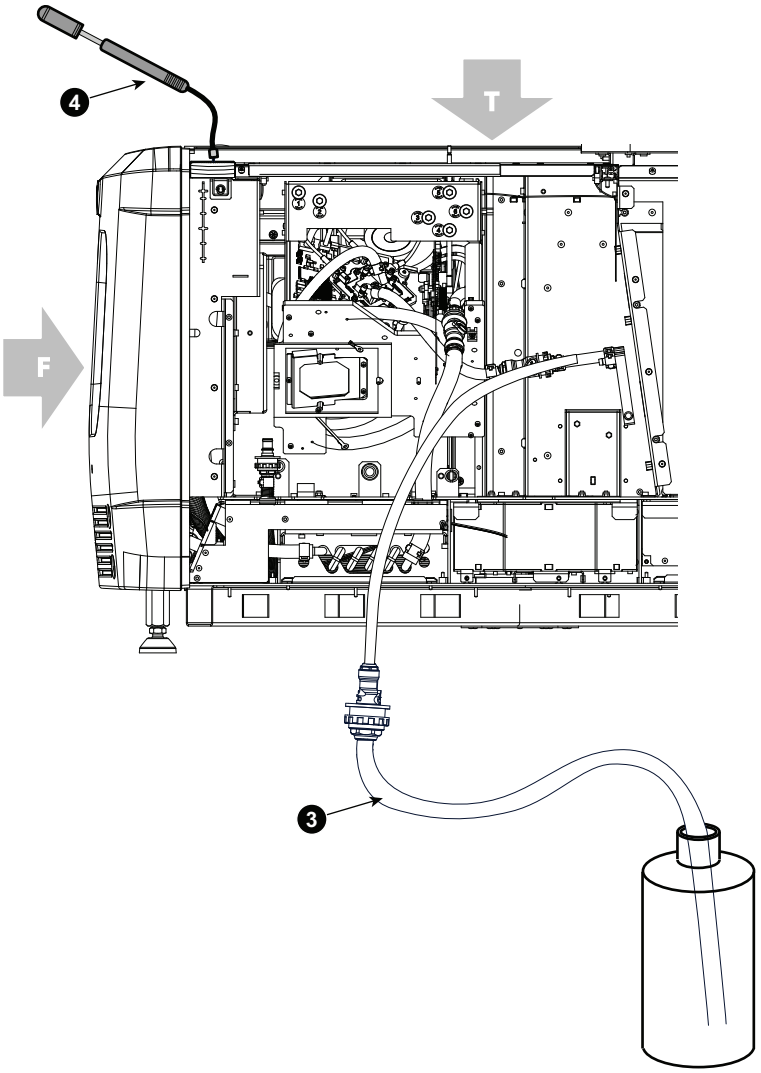


Image 12–5 Draining circuit

5. Connect a bicycle pump to the pressure vessel of the filler cap and start pumping until no more liquid is coming out of the tube (4).
6. Disconnect the extension tube.
7. Take a 60 cm long tube with a female connector and connect to the male connector (5).

   Insert the open end of the tube into an empty bottle.

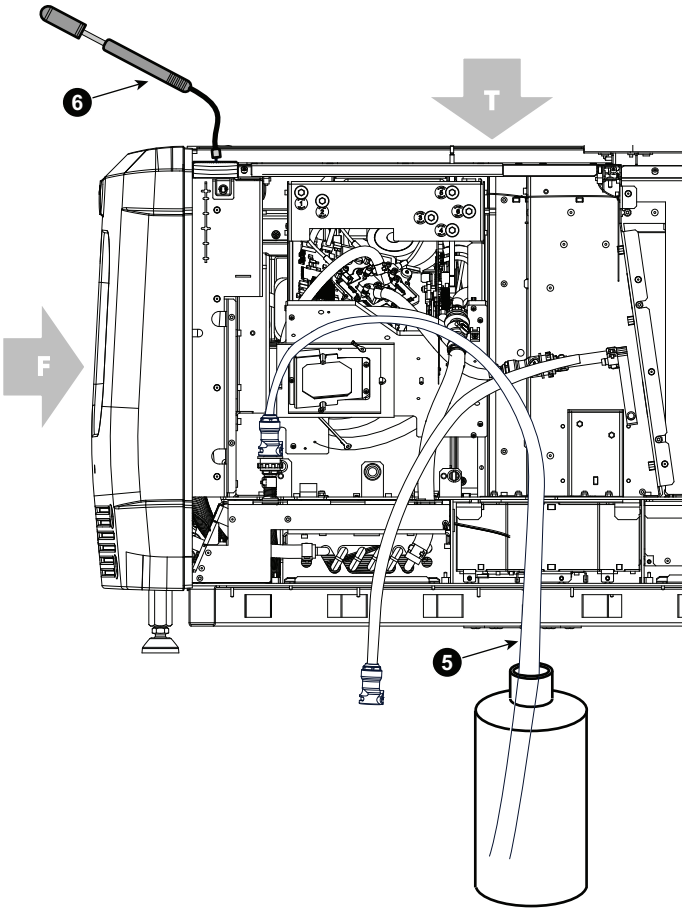


Image 12–6 Draining circuit

8. Start pumping again until all liquid is out of the circuit (6).
9. Disconnect the bicycle pump and remove the filler cap.

# 12.4 Filling the liquid cooling circuit

**WARNING:** Only use Barco approved cooling liquid to refill the liquid cooling circuit of the projector. Neglecting this may lead to irreversible damage of the projector.

## How to fill?

1. Bring the free end of the connected extension tube a few centimeter above the filler opening.

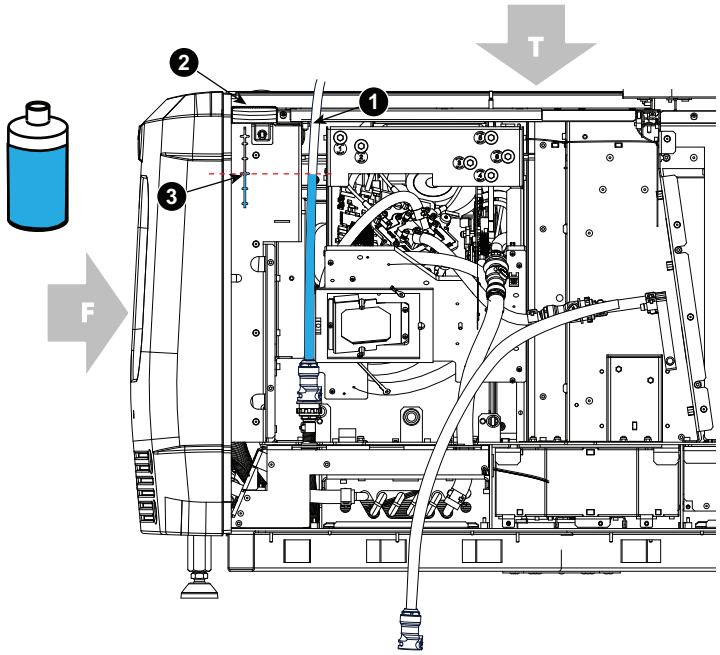


Image 12–7 Filling the cooling circuit

2. Fill up the reservoir slowly with fresh cooling liquid until liquid level in the extension tube is equal with the minimum indication in the reservoir.
3. Uncouple the extension tube and pour out the tube into the bottle.
4. Reestablish the connection with the rod entrance cooling block.
5. Fill up the reservoir to its maximum.
6. Reestablish the power connection to the projector and start up the refill mode (Installation → Advanced → Refill mode).

   Air bubbles will be visible inside the reservoir.

   The cooling circuit will be filled with liquid and the air will be pushed out.

   When the liquid level in the reservoir becomes to low, fill up with fresh liquid.
7. When the liquid level in the reservoir does not lower anymore, let run the pump for a few more minutes to expel the last air bubbles.
8. Stop the refill mode.

   Fill up the reservoir until the level is equal with the Max indication on the reservoir.
9. Close the reservoir with the filler cap.
10. Reinstall all covers.
11. Clear the security warning. See projector's installation manual, chapter *Maintenance*.

# 12.5 Removal of the Liquid Cooling assembly

This procedure assumes that the left cover of the projector is already removed.

## Required tools

3mm Allen wrench.

## How to remove the Liquid Cooling assembly from the projector?

1. Remove the inner cover plate of the Light Processor compartment. Use a 3mm Allen wrench to loosen the two screws (reference 1) of the inner plate as illustrated.

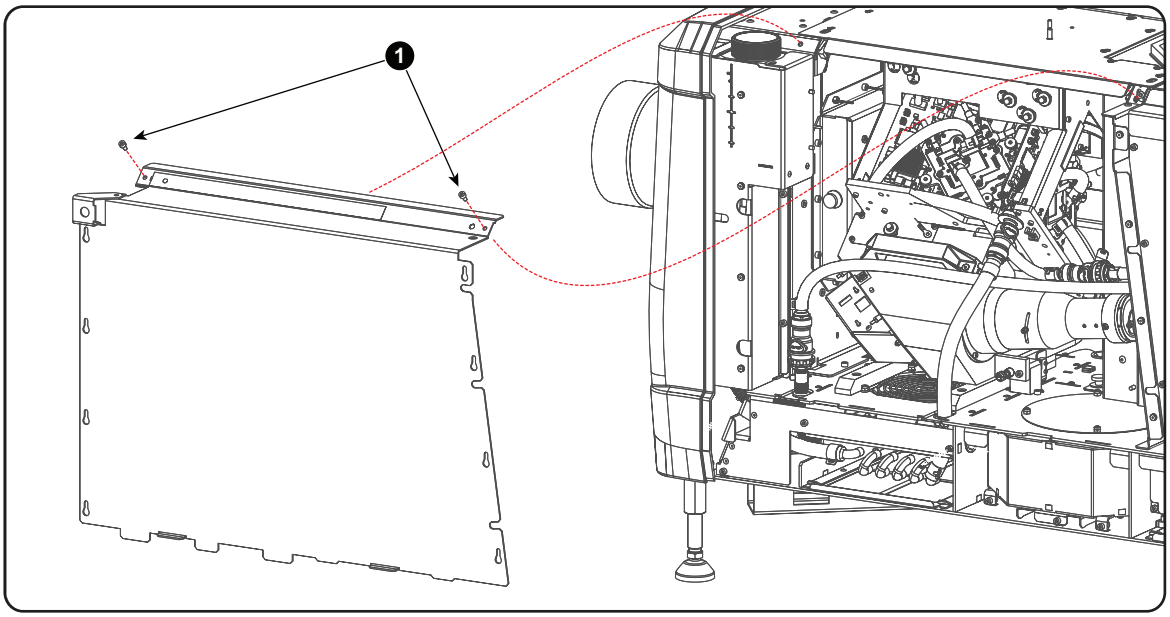


Image 12–8

2. Remove the cover plate of the reservoir of the Liquid Cooling Circuit. Use a 3mm Allen wrench to loosen the two screws (reference 2 ) of the cover plate as illustrated.

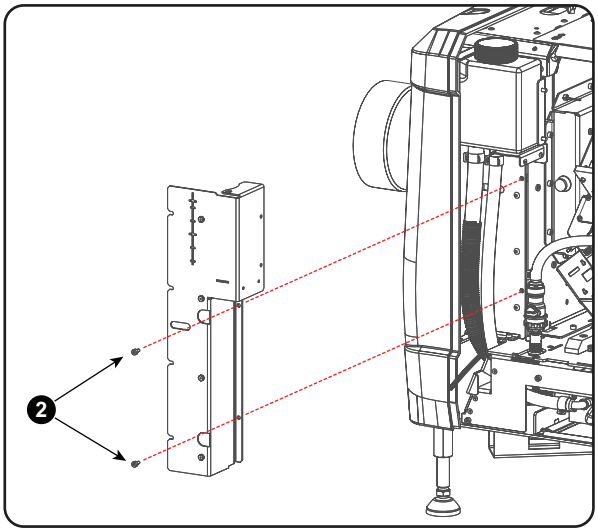


Image 12–9

3. Interrupt the Liquid Cooling circuit from the Light Processor by uncoupling the two valved fittings. One valved fitting (reference 3) is situated in the tube coming from the pump and going to the Light Pipe cooling

block. The second valved fitting (reference 4) is located in the tube between the Heat Exchanger and the Light Processor.

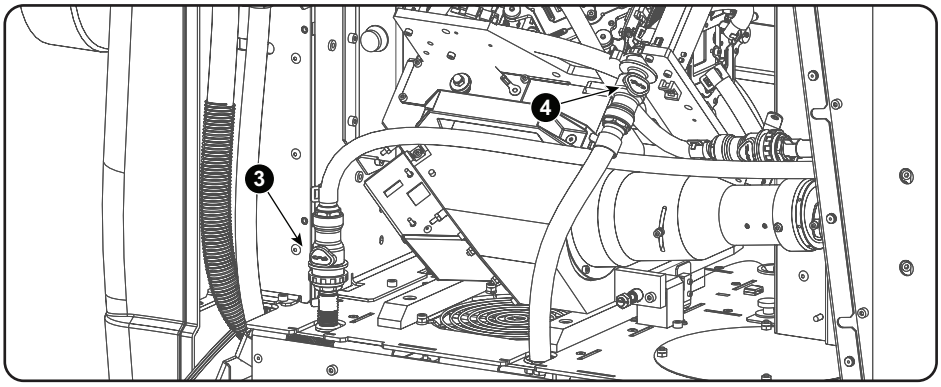


Image 12–10

4. Loosen the three screws (reference 5) of the Liquid Cooling assembly and pull the assembly about 20cm out of the projector to access the wire units of the pump and fans.

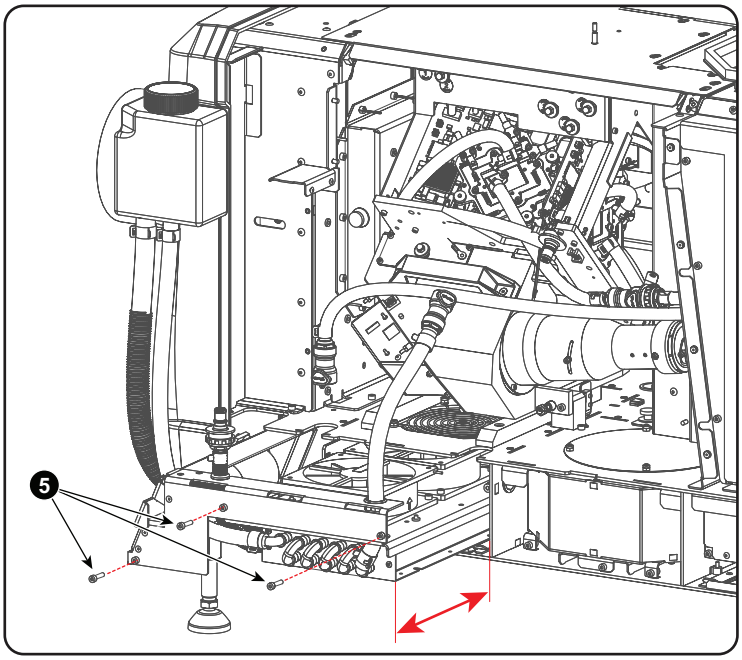


Image 12–11

5. Disconnect the wire unit of the Pump (reference 6) and the wire units of the fans of the Heat Exchanger (reference 7 & 8).

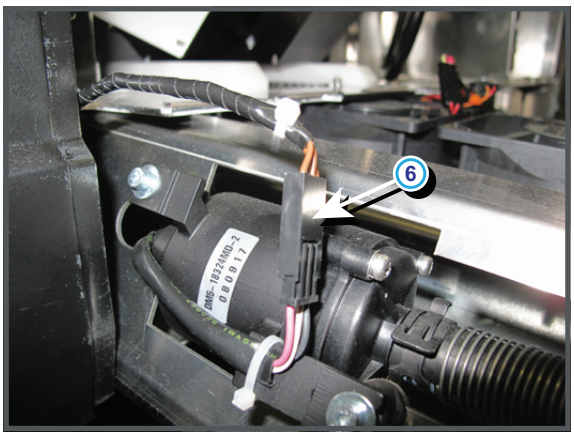


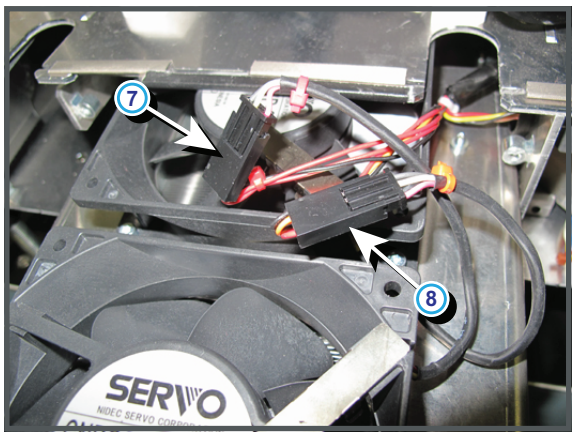


Image 12–12

6. Remove the Liquid Cooling assembly from the projector.

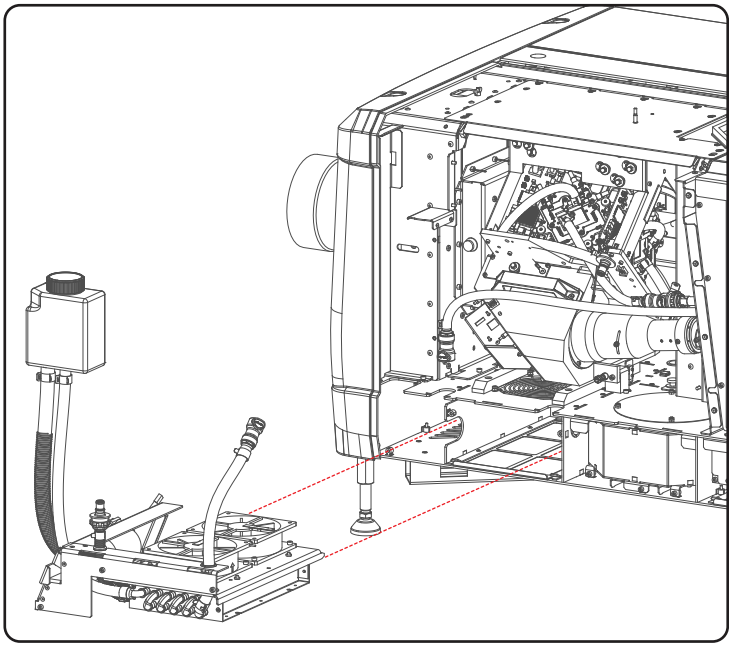

Image 12–13

# 12.6 Installation of the Liquid Cooling assembly

## Required tools

3mm Allen wrench.

## How to install the Liquid Cooling assembly?

1. Slide the Liquid Cooling assembly partially in its compartment underneath the Light Processor. Make sure that the wire units inside the compartment remains accessible.

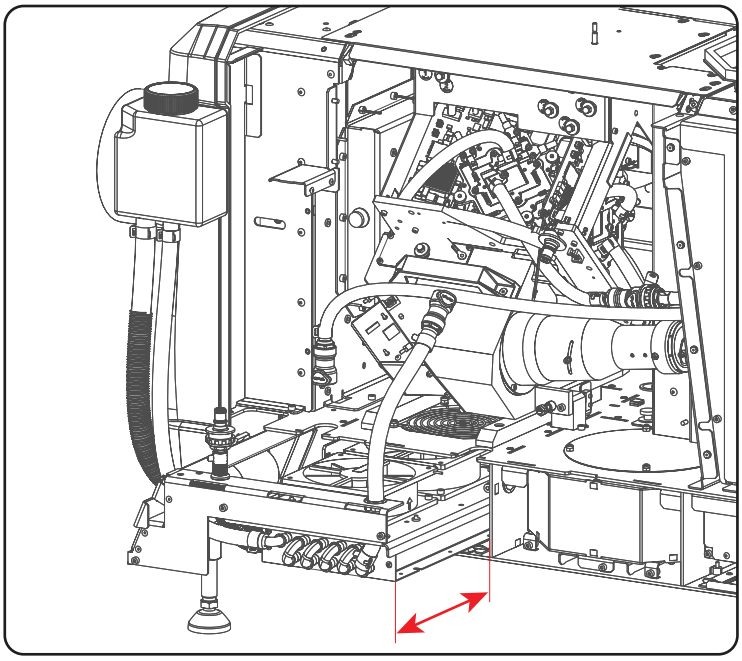

Image 12–14

2. Connect the wire units (reference 7 & 8) of the two fans with the internal wire units as illustrated. Guide the wire units and connectors of the fans inside the opening between the two fans. This to prevent that the wire units blocks the insert of the Liquid Cooling assembly.

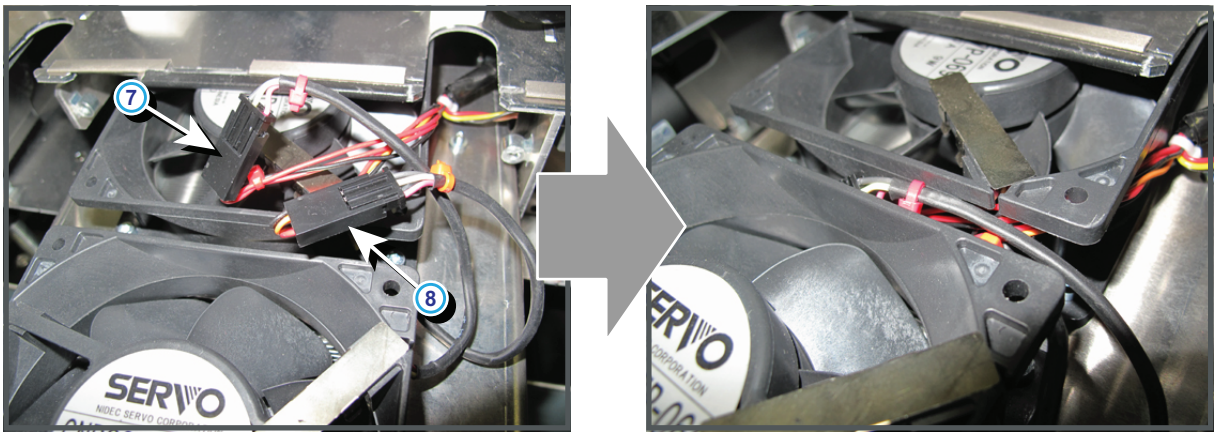


Image 12–15

3. Connect the wire unit (reference 6) of the pump with the internal wire unit as illustrated.

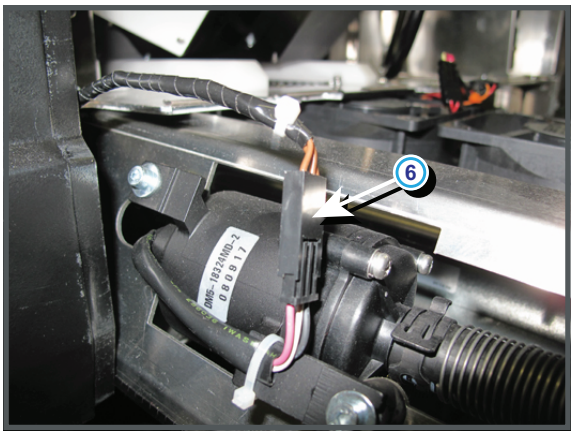


Image 12–16

4. Push the Liquid Cooling assembly completely inside its compartment and fasten the assembly with three hexagon socket head cap screws (reference 5). Use a 3mm Allen wrench.

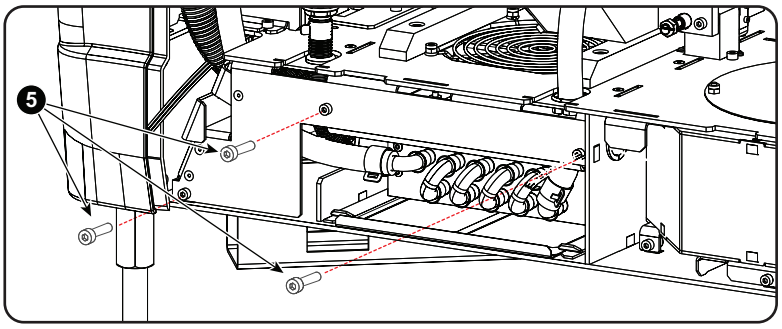


Image 12–17

5. Close the loop of the Liquid Cooling Circuit by coupling the two valved fittings. One valved fitting (reference 3) is situated in the tube coming from the pump and going to the Light Pipe cooling block. The second valved fitting (reference 4) is located in the tube between the Heat Exchanger and the Light Processor.

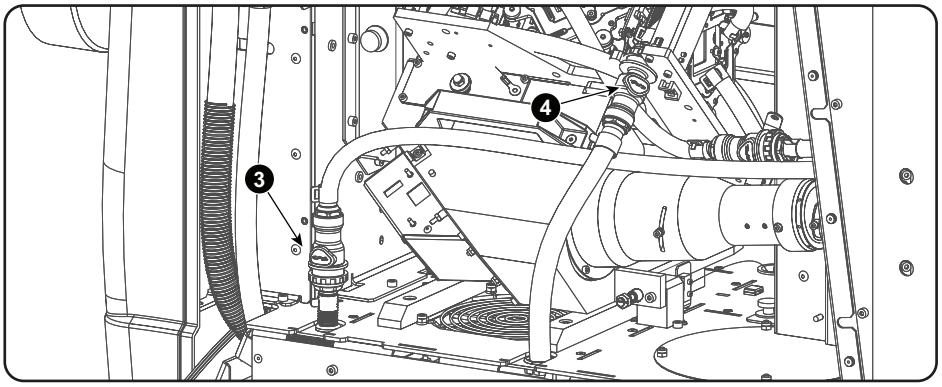


Image 12–18

6. Place the reservoir of the assembly into position and install the cover plate of the reservoir. Fasten the cover plate with two hexagon socket head cap screws (reference 2) . Use a 3mm Allen wrench.

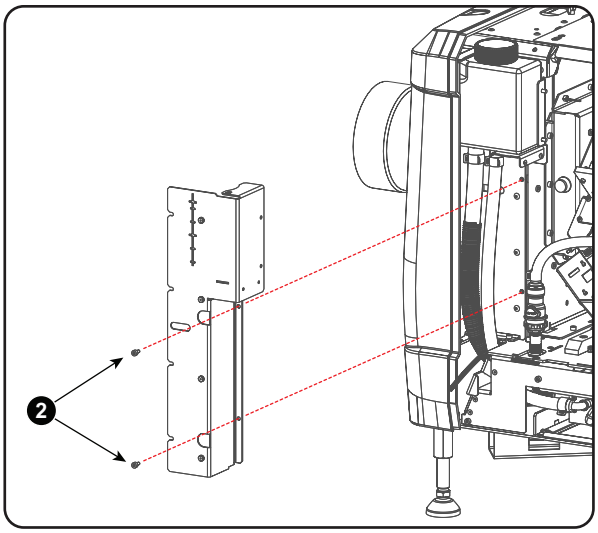


Image 12–19

7. Install the inner cover plate of the Light Processor compartment. Fasten the inner cover plate with two hexagon socket head cap screws (reference 1). Use a 3mm Allen wrench.

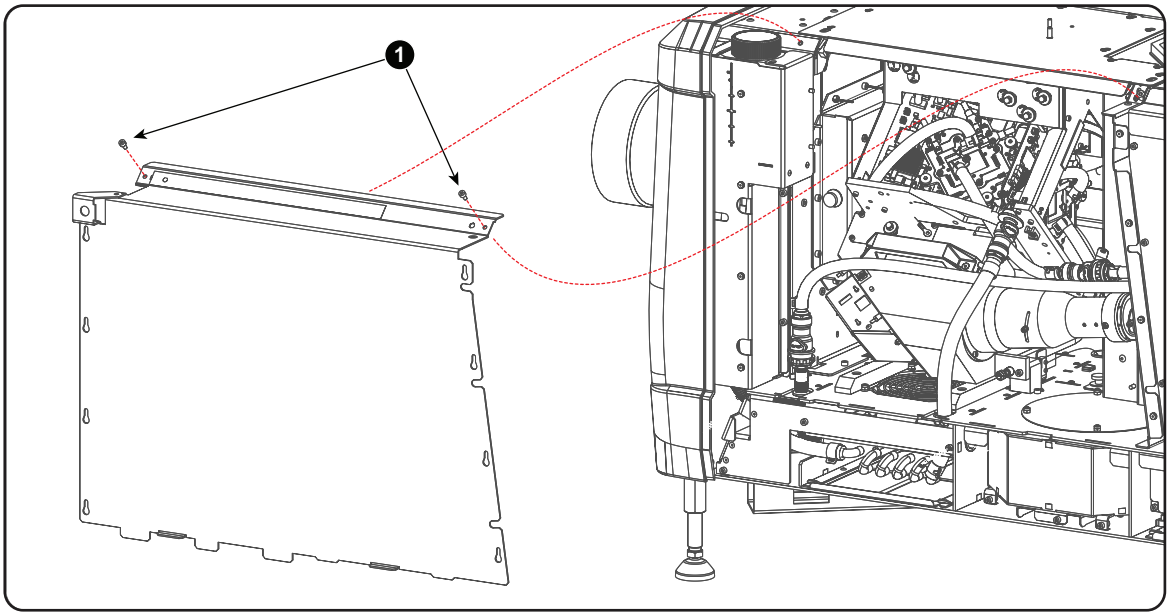


Image 12–20

# 12.7 Replacement of the Pump (RD to RD)

This procedure assumes that the Liquid Cooling Circuit is drained (see “Draining the liquid cooling circuit”, page 287) and that the Liquid Cooling assembly is removed from the projector.

## Required tools

- Allen wrench 3 mm
- Open-end wrench 7 mm
- Cloths
- Universal pliers
- Knife

## Required parts

Pump kit

## About the pump kit

Replace with a pump kit which model name starts with”RD”.




Image 12–21

## How to replace the Pump of the Liquid Cooling assembly?

1. Detach the pump from the assembly. Use a 3 mm Allen wrench to loosen the two screws (reference 1) as illustrated.

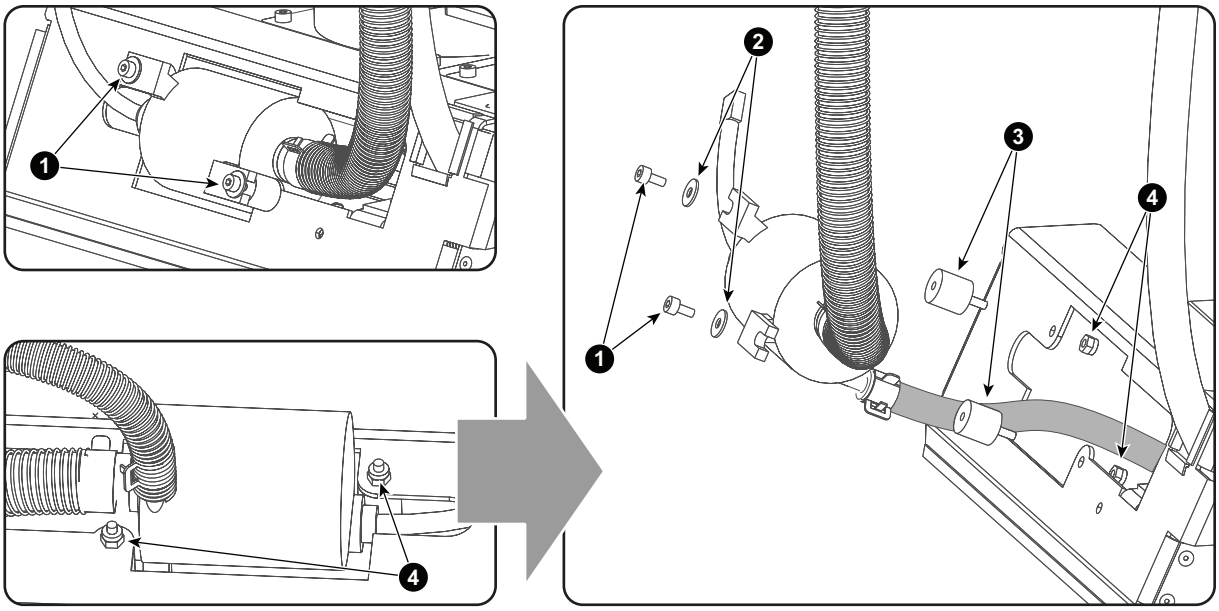


Image 12–22

2. Remove both hoses from the old Pump house. If it is impossible the pull off the hoses, cut both hoses just next the clip to have minimal loss in length of the hose.
3. Provide both hoses with a clip (reference 2 & 5) and push the hoses over their respective nipple the Pump house. Note that the thick nipple (reference 6) is the input side of the Pump house and has to be connected with the thick hose (reference 4) that comes from the reservoir. The small nipple (reference 3) is the output side of the Pump house and has to be connected with the hose (reference 1) that comes from the Light Processor.

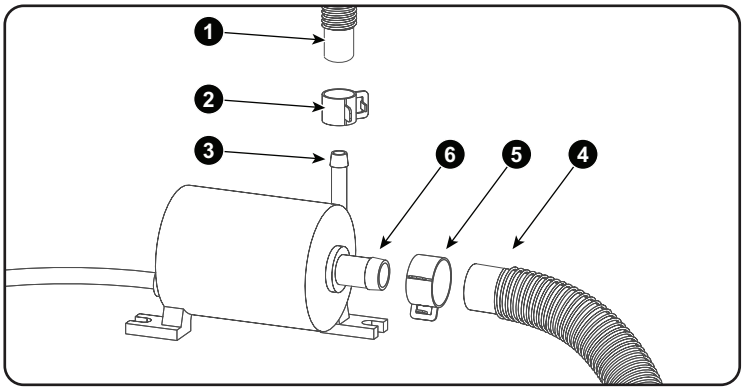


Image 12–23

4. Slide the clip (reference 2 & 5 Image 12–23) of both hoses over the connection. Use an universal pliers to push both clip tongs to each other in order to open the clip and to move the clip over the connection.
5. Install pump on the Liquid Cooling assembly. Make sure that the rubber vibration rings (reference 3) and the plain washers (reference 2) are installed as illustrated in Image 12–22.

Reinstall the Liquid Cooling assembly in the projector. Update the projector software (to make sure the projector recognizes the new pump) and then proceed with refilling the cooling circuit. See “Filling the liquid cooling circuit”, page 290.

# 12.8 Replacement of the complete cooling pump with a new model (RD to NRD)

This procedure assumes that the Liquid Cooling Circuit is drained (see “Draining the liquid cooling circuit”, page 287) and that the Liquid Cooling assembly is removed from the projector.

## About the pump kit

The pump used in the projectors up to this point has become end of life. Therefore, all pump replacement procedures will replace the existing pump with a newer model.

Follow this procedure if you have a pump model that starts with “**RD**” (e.g. RD-05HCB24–12). This pump will be replaced with the new model, whose model name starts with “**NRD**” (e.g. NRD-08TW24–01).




Image 12–24 Example of the new pump kit, whose model name starts with “NRD”

In order to have this pump behave correctly, make sure you have upgraded the projector software to version 2.8.83 or newer.

When opening the kit, check if the content is complete. Make sure it has the following:

- The kit contains two intermediate plates, one with an indication “C” and one with an indication “B”. Take the one with indication “B” (reference A, Image 12–27).
- Check wether the kit contains two shock absorbers (reference F) and two bumpers with pull-through screws (reference G).
- Check if the pump kit contains a new wire unit, to be connected to the pump.

## Required tools

- Allen wrench with ball point 3 mm
- Open-end wrench 7 mm
- Phillips screwdriver PH2.
- Cloths
- Universal pliers
- Knife

## Required parts

New pump kit

## How to remove the old pump from the pump assembly?

1. Detach the pump from the assembly. Use a 3 mm Allen wrench to loosen and remove the two screws and spacers (references 1 and 2, Image 12–25) as illustrated.

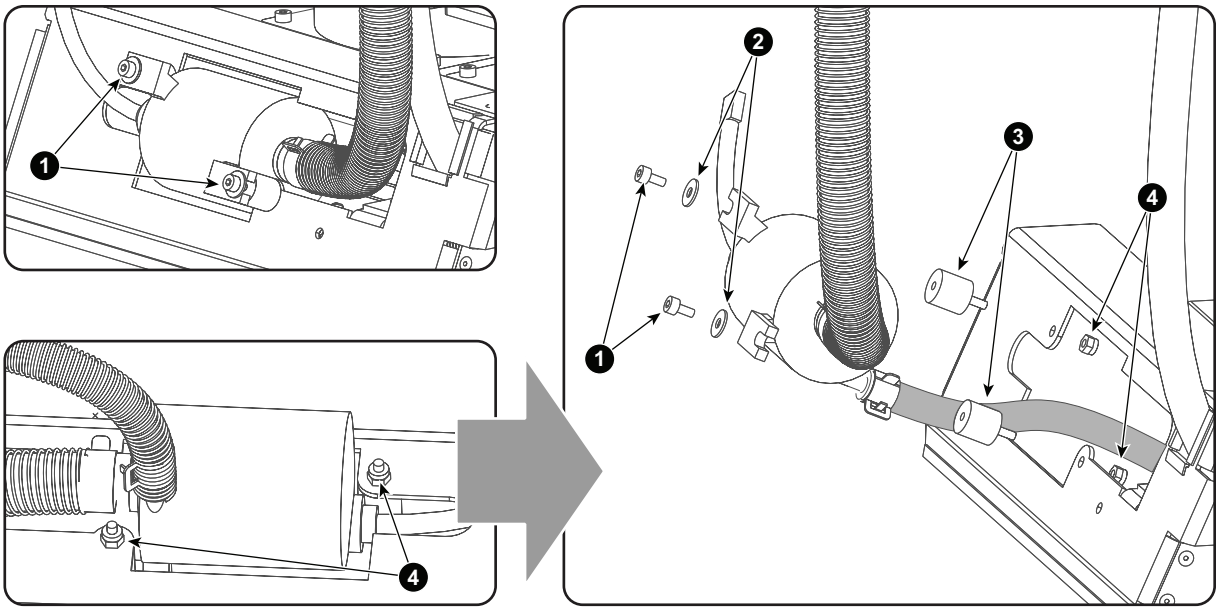


Image 12–25 Removing the old pump assembly

2. Remove the two bumpers and spacers (references 3 and 4) from the pump assembly. Use a 3 mm Allen wrench to loosen the bumpers.

   *Note:* Do not re-use these bumpers. You must use the new bumpers provided in the pump kit.

3. Remove the wire unit from the pump. This wire unit cannot be re-used.

4. Carefully remove both hoses and clips (references 2 and 5, Image 12–26) from the old pump house. Use an universal pair of pliers to push both clip tongs to each other in order to open the clip.

   *Tip:* If it is impossible the pull off the hoses, cut both hoses just next the clip to have minimal loss in length of the hose.

   *Tip:* The “spare” length of the hose is limited. Make sure that you do not strain the hose. If possible, leave room for at least one more future replacement procedure.

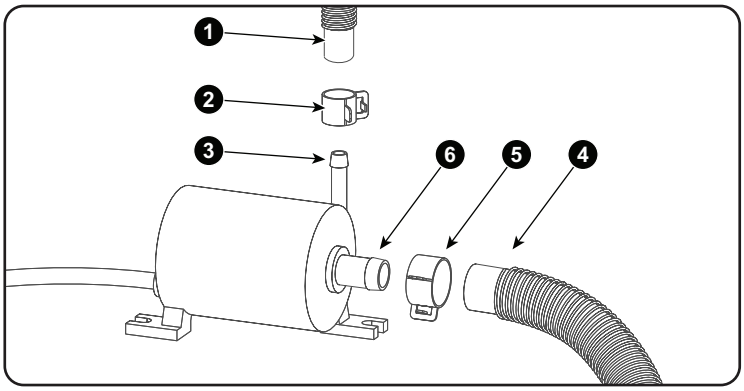


Image 12–26 The tubing connections of the pump

## How to mount the new pump

1. Push the thin hose (reference 1) over the small pump nipple (reference 3). The small nipple is the output side of the Pump house and has to be connected with the hose (reference 1) that comes from the Light Processor.

   *Tip:* While you can do the same with the large hose (reference 4) and nipple (reference 6), it is better to wait until after the pump has been mounted onto the assembly.

2. Slide the clip (reference 2 & 5 ) of both hoses over the connection. Use an universal pliers to push both clip tongs to each other in order to open the clip and to move the clip over the connection.

*Note:* You can re-use the old clips if possible. Check the old clips for damage before re-using them. If they are too damaged, replace the clips instead.

3. Insert the pump in the assembly as illustrated in the following image.

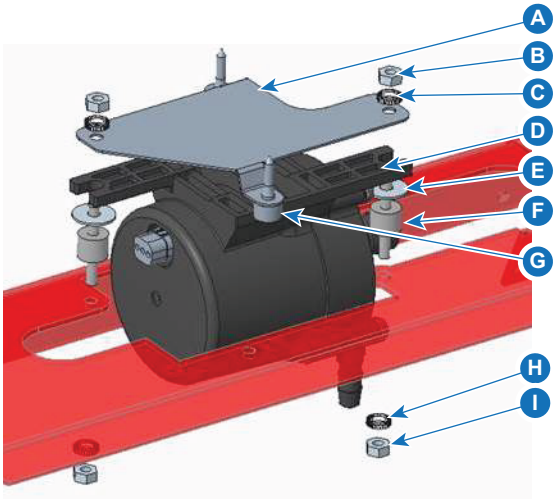


Image 12–27 Mounting the pump in the assembly

A Intermediate plate
B Nut for shock absorber
C Lock washer
D Pump
E Washer
F Shock absorbers
G Bumpers with pull-through screws
H Lock washer
I Nut for shock absorbers

*Caution:* Due to the slightly larger diameter of the pump, it cannot be mounted from the front side of the plate. It can only be mounted from the backside of the plate (as illustrated).

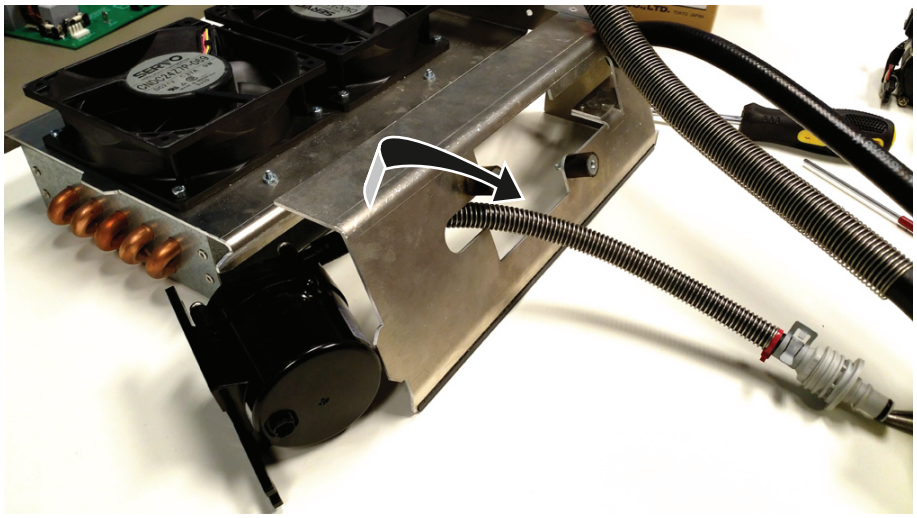

Image 12–28 Mounting the pump from the backside of the plate

4. Mount the new plate with cutout indication "**B**" on the pump base.
5. Insert both shock absorbers (reference F) as indicated, place a washer (reference E). Fixate with a lock washer (reference C) and a nut (reference B).
6. Insert both bumpers with pull-through screws as indicated (reference G).
7. Fixate the pump on both sides. Place a lock washer (reference H) and turn on a nut (reference I).
8. Push the thick hose over the large nipple on the pump. The thick nipple (reference 6) is the input side of the Pump house and has to be connected with the thick hose (reference 4) that comes from the reservoir.
9. Connect the new wire unit of the pump, which is included in the pump kit.

*Caution:* Do not re-use the existing wire unit.

The end result should look as illustrated:

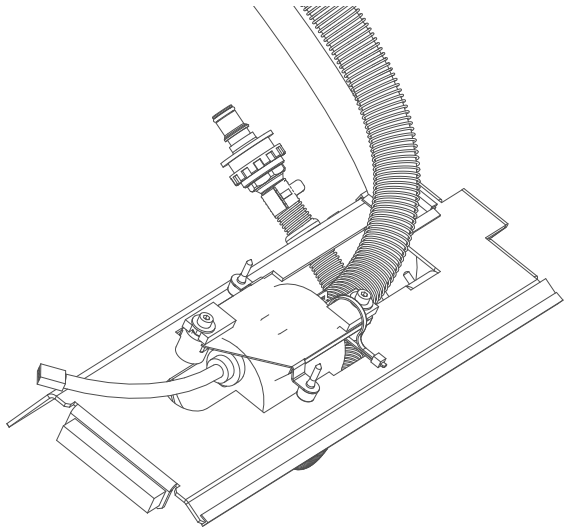

Image 12–29 end result after the pump upgrade

Reinstall the Liquid Cooling assembly in the projector. Update the projector software (to make sure the projector recognizes the new pump) and then proceed with refilling the cooling circuit. See "Filling the liquid cooling circuit", page 290.

# 12.9 Replacement of the pump (NRD to NRD)

This procedure assumes that the Liquid Cooling Circuit is drained (see “Draining the liquid cooling circuit”, page 287) and that the Liquid Cooling assembly is removed from the projector.

## Required tools

- Open-end wrench 7 mm
- Cloths
- Universal pliers
- Knife

## Required parts

Pump kit

## About the pump kit

Replace with a pump kit which model name starts with”NRD”.




Image 12–30 Example of the new pump kit, whose model name starts with “NRD”

## How to replace the Pump of the Liquid Cooling assembly?

1. Detach the pump from the pump assembly as illustrated. Use a 7 mm open-end wrench to loosen all the nuts (reference B and I) holding the pump onto the assembly.

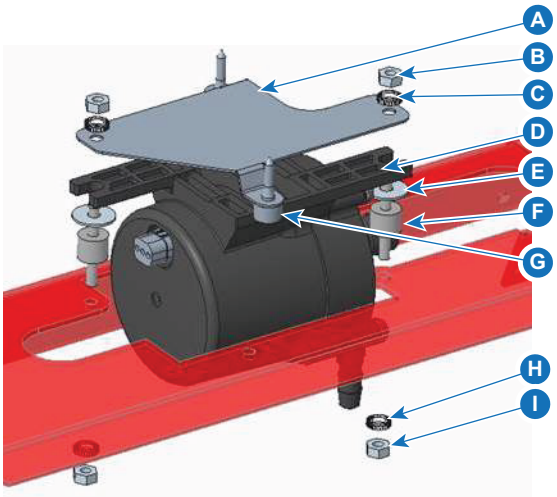


Image 12–31 Mounting the pump in the assembly

**A** Intermediate plate
**B** Nut for shock absorber
**C** Lock washer
**D** Pump
**E** Washer
**F** Shock absorbers
**G** Bumpers with pull-through screws
**H** Lock washer
**I** Nut for shock absorbers

2. Remove both hoses from the old Pump house. If it is impossible the pull off the hoses, cut both hoses just next the clip to have minimal loss in length of the hose.
3. Push the thin hose (reference 1) over the small pump nipple (reference 3). The small nipple is the output side of the Pump house and has to be connected with the hose (reference 1) that comes from the Light Processor.

   *Tip:* While you can do the same with the large hose (reference 4) and nipple (reference 6), it is better to wait until after the pump has been mounted onto the assembly.

4. Slide the clip (reference 2 & 5 ) of both hoses over the connection. Use an universal pliers to push both clip tongs to each other in order to open the clip and to move the clip over the connection.

   *Note:* You can re-use the old clips if possible. Check the old clips for damage before re-using them. If they are too damaged, replace the clips instead.

5. Insert the pump back into the assembly.
6. Mount the new plate with cutout indication “**B**” on the pump base.
7. Insert both shock absorbers (reference F) as indicated, place a washer (reference E). Fixate with a lock washer (reference C) and a nut (reference B).
8. Insert both bumpers with pull-through screws as indicated (reference G).
9. Fixate the pump on both sides. Place a lock washer (reference H) and turn on a nut (reference I).
10. Push the thick hose over the large nipple on the pump. The thick nipple (reference 6) is the input side of the Pump house and has to be connected with the thick hose (reference 4) that comes from the reservoir.
11. Connect the new wire unit of the pump, which is included in the pump kit.

    *Caution:* Do not re-use the existing wire unit.

The end result should look as illustrated:

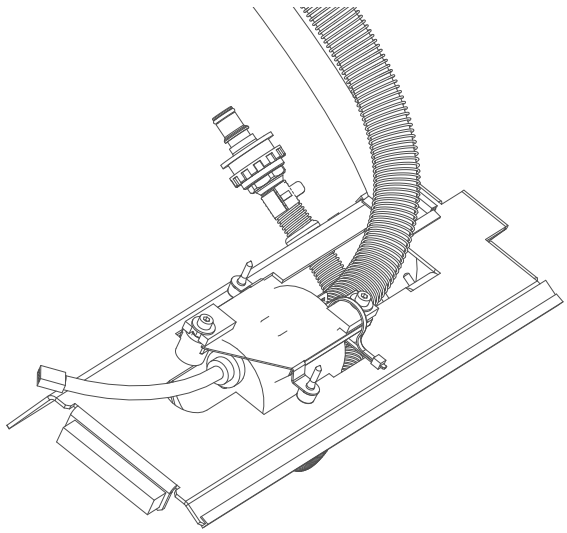

Image 12–32 end result after the pump upgrade

Reinstall the Liquid Cooling assembly in the projector. Update the projector software (to make sure the projector recognizes the new pump) and then proceed with refilling the cooling circuit. See “Filling the liquid cooling circuit”, page 290.

# 12.10 Replacement of the Heat Exchanger

This procedure assumes that the Liquid Cooling Circuit is drained (see “Draining the liquid cooling circuit”, page 287) and that the Liquid Cooling assembly is removed from the projector.

## Required tools

- Set of cutting pliers.
- Set of universal pliers.
- 3 mm Allen Wrench.

## How to replace the Heat Exchanger of the Liquid Cooling Circuit?

1. Detach the Heat Exchanger from the assembly. Use a 3mm Allen wrench to loosen the four screws (reference 1) as illustrated.

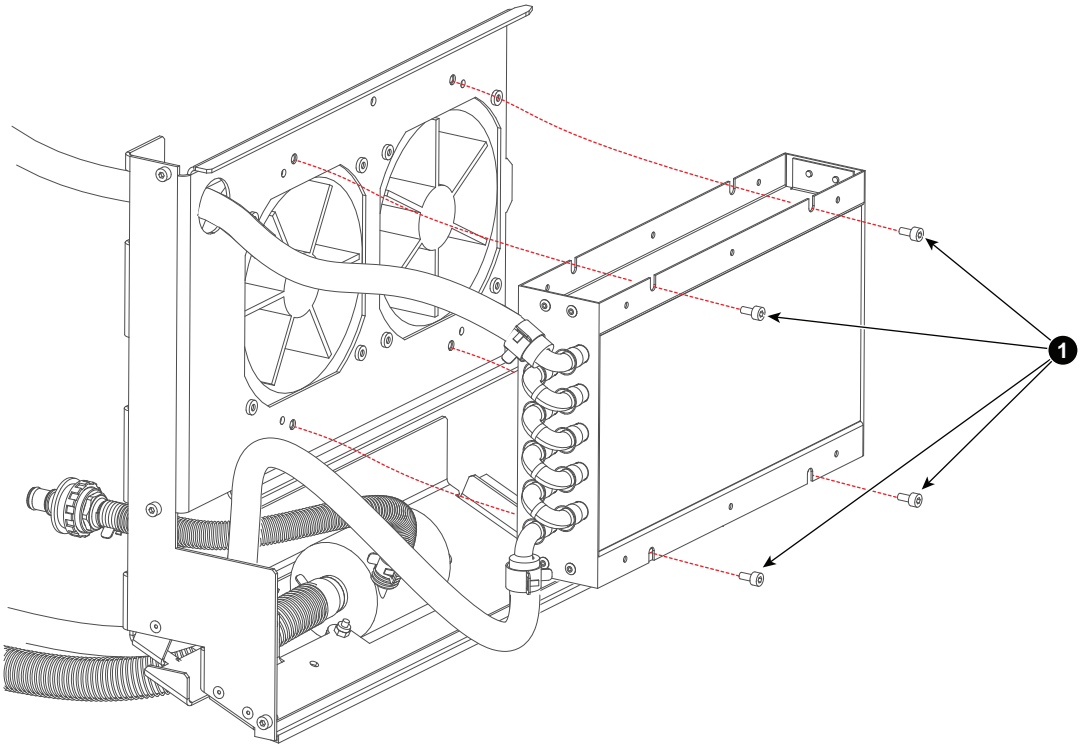


Image 12–33

2. Remove the tubes (reference 3 & 6) from the Heat Exchanger.

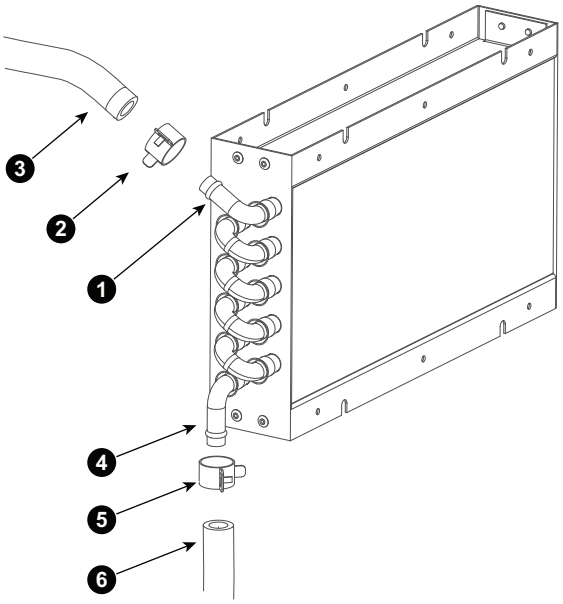


Image 12–34

3. Connect the tubes (reference 3 & 6 Image 12–34) of the Liquid Cooling Circuit with the new Heat Exchanger. Make sure to place a clip (reference 2 & 5 Image 12–34) upon each tube prior to connecting. Use an universal pliers to push both clip tongs to each other in order to open the clip and to move the clip over the connection (reference 1 & 4 Image 12–34).

4. Install the new Heat Exchanger upon the Cooling Liquid assembly using four hexagon socket head cap screws (reference 1 Image 12–33).

Reinstall the Liquid Cooling assembly in the projector. Update the projector software and then proceed with refilling the cooling circuit. See “Filling the liquid cooling circuit”, page 290.

# Lenses and Lens Holder 13


13.1 Introduction ..... 308
13.2 Available lenses ..... 309
13.3 Lens Calculator ..... 311
13.4 Lens installation ..... 312
13.5 Lens removal ..... 315
13.6 Lens shift, zoom & focus ..... 316
13.7 Back Focal Length adjustment ..... 318
13.8 Scheimpflug adjustment ..... 322
13.9 Fixation of the Lens Holder front plate ..... 326
13.10 Cleaning the lens ..... 328
13.11 Removal of the Lens Holder ..... 329
13.12 Installation of the Lens Holder ..... 332
13.13 Replacement of the Vertical Shift stepper motor ..... 335
13.14 Replacement of the Horizontal Shift stepper motor ..... 338
13.15 Replacement of the Focus stepper motor ..... 341
13.16 Replacement of the Focus stepper motor Driver board ..... 343
13.17 First Placement of the Inner Dust Rubber ..... 344
13.18 Replacement of the Inner Dust Rubber ..... 347


## About this chapter

This chapter describes how to replace the complete Lens Holder or single parts of the Lens Holder like the motors for lens shift. Note that the focus and shift functionality are built into the Lens Holder. The motor for the zoom functionality is built into the Lens. Included in this chapter are the adjustment procedures for the Lens Holder (Scheimpflug) and Lens cleaning procedure.

**CAUTION:** Never transport the projector with the Lens mounted on it! Always remove the Lens before transporting the projector.

# 13.1 Introduction

## Lenses and Lens Holder

Next to securing the Lens, the Lens Holder makes it possible to shift, tilt and swing the lens plane with respect to the DMD plane of the projector. This adjustment mechanism ensures that the projected image can be perfectly focused on the screen. The motors required for horizontal and vertical shift and to zoom are built-in in the Lens Holder. The Lens Holder always has an electrical socket for the focus functionality of the motorized Lens.

## Parts identification of the Lens Holder

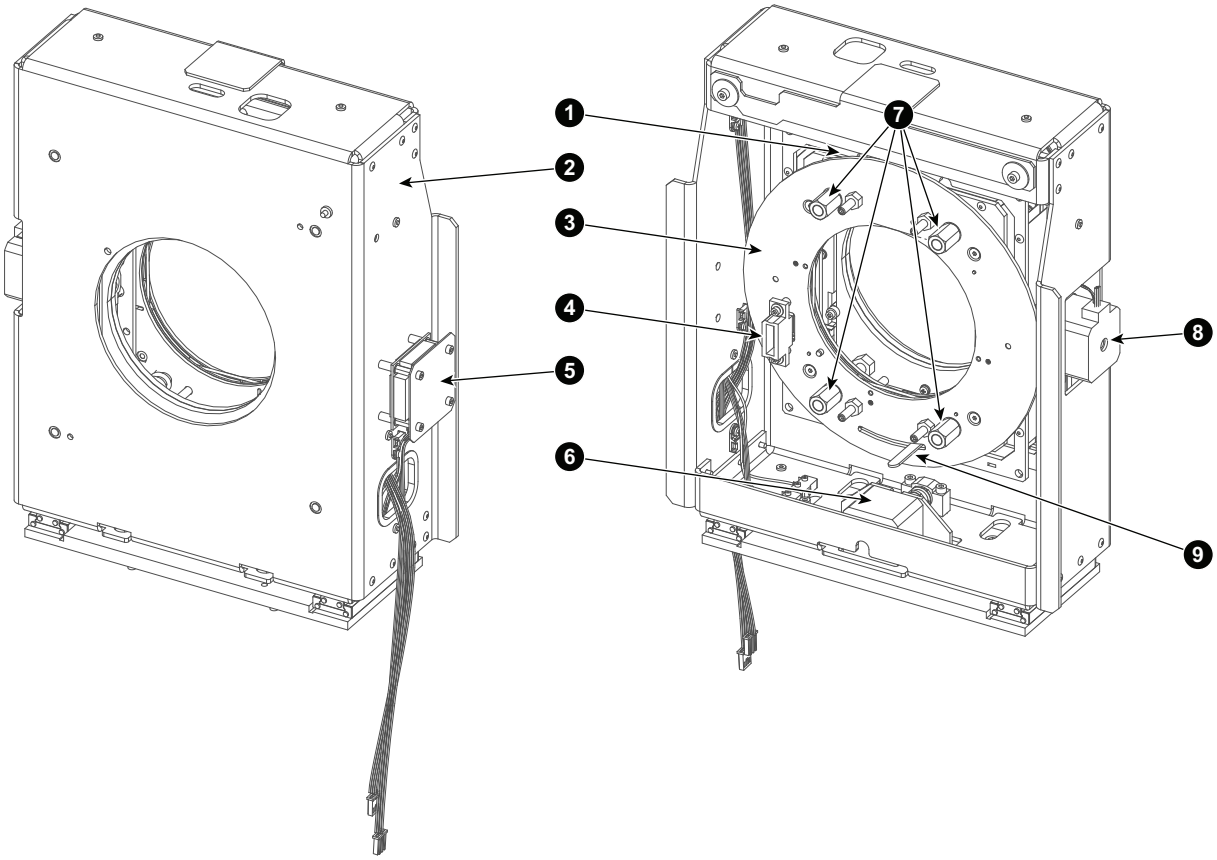


Image 13–1

1 Lens Holder Vertical Shift motor.
2 Lens Holder housing.
3 Lens Holder front plate.
4 Electrical socket Lens connection.
5 Lens Focus Motor Driver board .
6 Lens Holder Focus motor.
7 Adjustment screw Lens Holder front plate (Scheimpflug).
8 Lens Holder Horizontal Shift motor.
9 Lens lock handle.

# 13.2 Available lenses

## Which lenses are available for my projector?

The table below is subject to changes and was last updated on 22/10/2019. Consult Barco's web site for the most recent information about available lenses.

| Order No | Type | Throw Range | | Projector series | | |
|---|---|---|---|---|---|---|
| | | 2K | 4K | DP2K-B<br>DP4K-B<br>DP2K-BLP<br>DP4K-BLP<br>DP4K-L | DP4K-P<br>Prometheus I<br>Prometheus II | DP4K-LHC<br>DP4K-BLPHC<br>Thor<br>Prometheus III |
| **R9856504**<br>**R9856525** | HB | 1.25-1.90 | 1.13-1.72 | X | | |
| **R9856506** | HB | 1.25-1.91 | 1.13-1.72 | X | | |
| **R9856294**<br>**R9856526** | HB | 1.49-2.05 | 1.35-1.86 | X | | |
| **R9856297**<br>**R9856527** | HB | 1.61-2.31 | 1.46-2.10 | X | | |
| **R9856300**<br>**R9856528** | HB | 1.82-2.86 | 1.65-2.60 | X | | |
| **R9856303**<br>**R9856529** | HB | 2.21-3.70 | 2.00-3.35 | X | | |
| **R9855947** | HB | 2.8-5.5 | 2.53-4.98 | X | | |
| | | | | | | |
| **R98565042**<br>**R98565252**<br>**R98565062** | HC | | 1.13-1.72 | X | X | |
| **R98562942**<br>**R98565262** | HC | | 1.35-1.86 | X | X | |
| **R98562972**<br>**R98565272** | HC | | 1.46-2.10 | X | X | |
| **R98563002**<br>**R98565282** | HC | | 1.65-2.60 | X | X | |
| **R98563032**<br>**R98565292** | HC | | 2.00-3.35 | X | X | |
| | | | | | | |
| **R98565043**<br>**R98565253** | VHC | | 1.13-1.72 | | | X |
| **R98562943**<br>**R98565263** | VHC | | 1.35-1.86 | | | X |
| **R98562973**<br>**R98565273** | VHC | | 1.46-2.10 | | | X |

| Order No | Type | Throw Range | | Projector series | | |
|---|---|---|---|---|---|---|
| | | 2K | 4K | DP2K-B<br>DP4K-B<br>DP2K-BLP<br>DP4K-BLP<br>DP4K-L | DP4K-P<br>Prometheus I<br>Prometheus II | DP4K-LHC<br>DP4K-BLPHC<br>Thor<br>Prometheus III |
| **R98563003**<br>**R98565283** | VHC | | 1.65-2.60 | | | X |
| **R98563033**<br>**R98565293** | VHC | | 2.00-3.35 | | | X |

# 13.3 Lens Calculator

## How to select the right Lens?

1. Determine the required screen width (SW).
2. Determine the position of the projector in the projection room with regard to the screen and measure the projector-screen distance PD.

   *Note:* To be precise, PD is the perpendicular distance between the front plate of the Lens Holder and the screen.

3. Use the online Lens Calculator to find the most suitable Lens for this application.

   *Tip:* The online Lens Calculator is available on https://my.barco.com : Support > Digital Cinema Calculator.

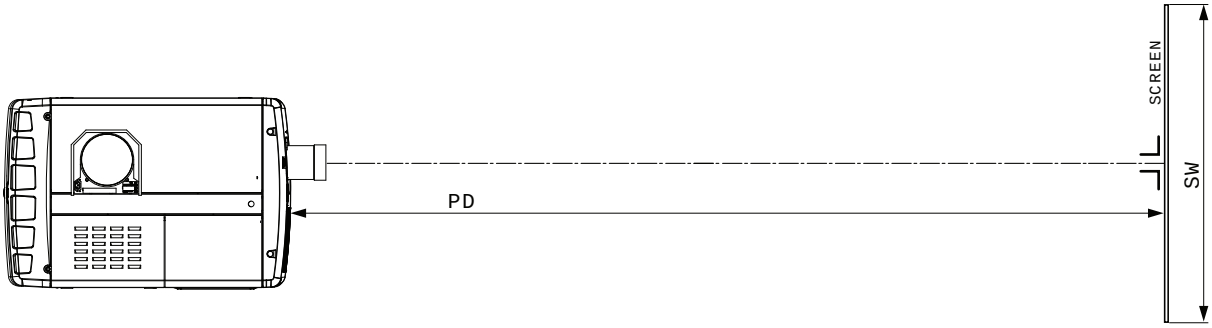


Image 13–2 Projector distance

# 13.4 Lens installation

## How to install a lens?

1. Remove the plastic lens holder cover.
   1. Put the lock (1) into the unlock position.
   2. Take out the plastic cover.

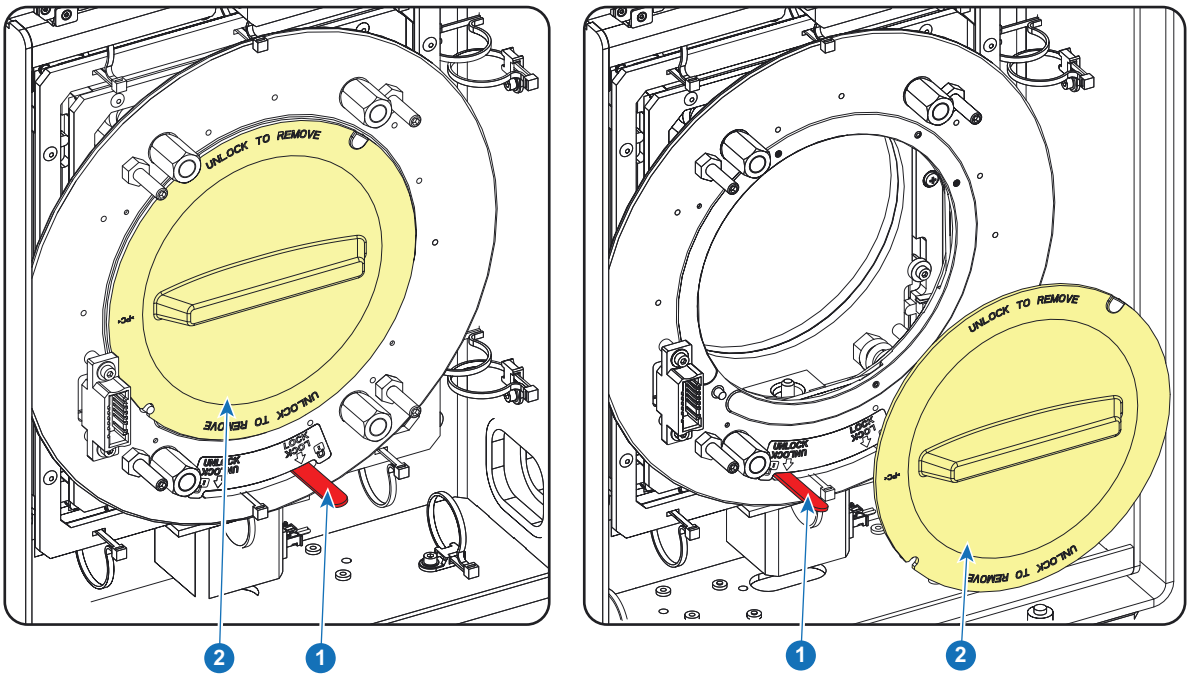


Image 13–3

2. Take the lens assembly out of its packing material and remove the lens caps on both sides.
3. Place the lens holder in the “unlocked” position by moving the lens lock handle (1) towards the lens power supply socket (2).

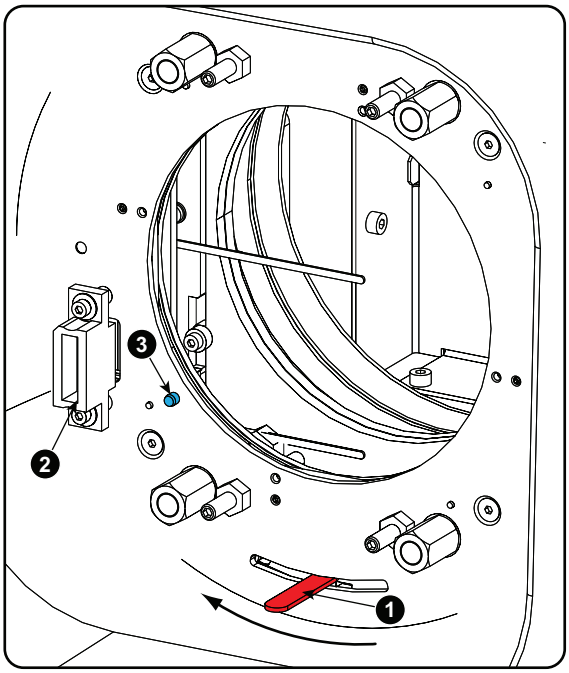


Image 13–4 Unlock lens holder

4. Ensure that the lens holder stands in the On-Axis position (horizontal and vertical mid position).

*Note:* The lens holder is placed default in the On-Axis position at factory.

5. Gently insert the lens in such a way that the lens connector matches the socket.

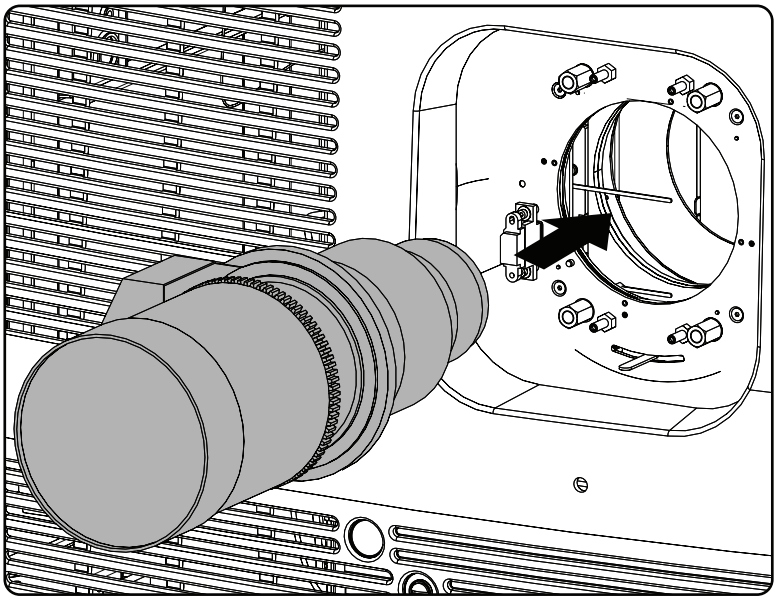

Image 13–5 Mount lens

6. Insert the lens until the connector seats into the socket.
   - the pin (3) on the lens holder matches with the sleeve in the lens.
   - the connector seats into the socket (2)

   *Warning:* Do not release the lens yet, as the lens may fall out of the lens holder.

7. Secure the lens in the lens holder by sliding the lens lock handle into the “locked” position, which is away from the lens power supply socket. Ensure the lens touches the front plate of the lens holder.

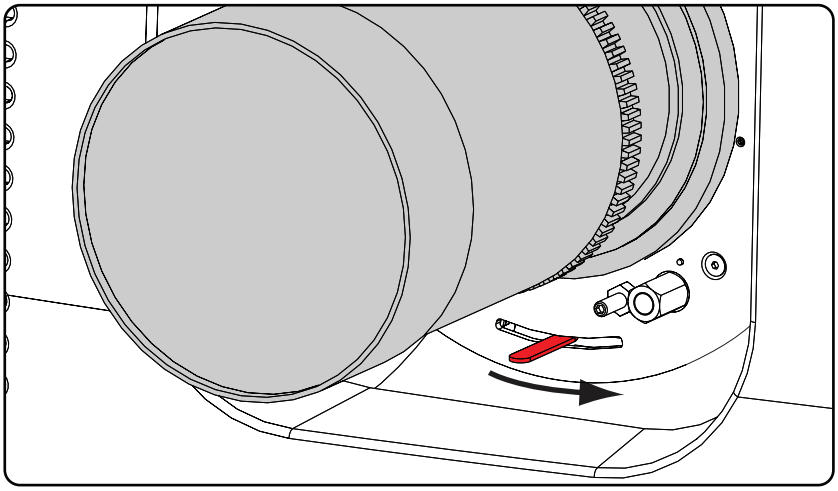

Image 13–6 Fix lens

8. Activate the corresponding lens parameters for the installed lens. (See user guide of the *“Communicator”* chapter *Installation > Advanced > Lens parameters*)

   *Caution:* Not using the correct lens parameters could result in lens damage.

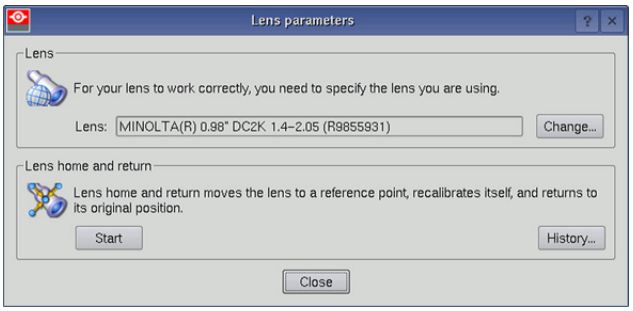


Image 13–7

9. Perform a lens **HOME & RETURN** operation. (See user guide of the *"Communicator"* chapter *Installation* > *Advanced* > *Lens parameters*)

   *Note:* The HOME & RETURN operation enables the projector to determine the reference positions of the motorized ZOOM and FOCUS of the installed lens.
   For the lenses with a focus adjustment mounted on the lens (4K lenses) , the lens holder goes to a normal (fixed) focus position. For these lenses, do not mechanically adjust the focus position of the lens holder, otherwise the normal position will be lost.

A Spatial Color Calibration (SCC) has to be execute in case of a first install or in case a High Brightness lens is swapped with a High Contrast lens or vice versa. See user guide of the Communicator for detail SCC calibration instructions.

**CAUTION:** Never transport the projector with a lens mounted in the lens holder. Always remove the lens before transporting the projector. Neglecting this can damage the lens holder and prism.

# 13.5 Lens removal

## How to remove a lens?

1. Support the lens with one hand while you unlock the lens holder by sliding the lock handle towards the “unlocked” position as illustrated.

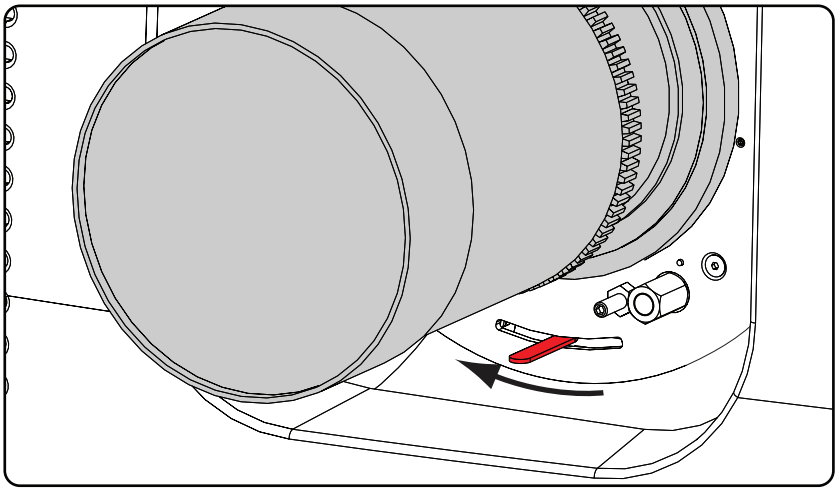

Image 13–8 Unlock lens

2. Gently pull the lens out of the lens holder.

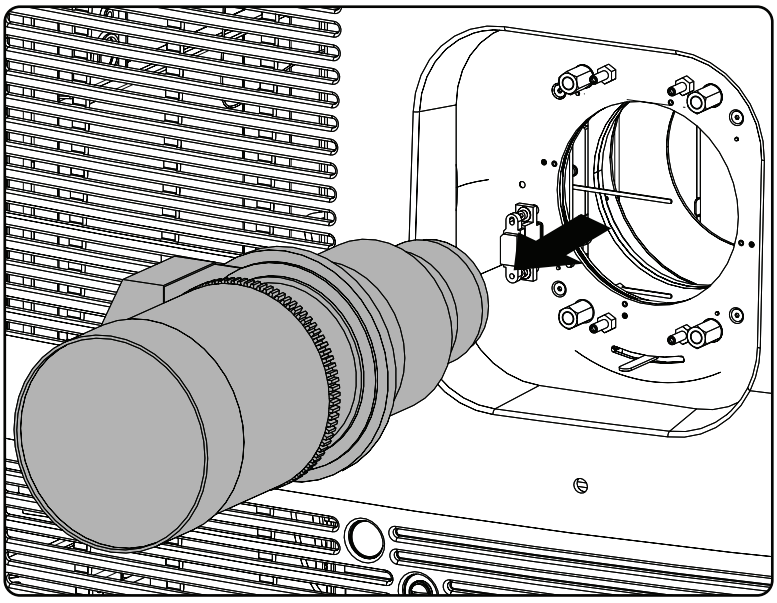

Image 13–9 Remove lens

It's recommended to place the lens caps of the original lens packaging back on both sides of the removed lens to protect the optics of the lens.

It's recommended to place the plastic lens holder cover of the original projector packaging, back into the Lens opening to prevent intrusion of dust.

# 13.6 Lens shift, zoom & focus

## Motorized lens adjustment

The DP2K and DP4K B series is equipped with a motorized lens shift functionality and a motorized zoom & focus functionality.

## Maximum shift range

The lens can be shifted with respect to the internal optics of the projector (DMD) which results in a shifted image on the screen (Off-Axis). A 100% shift means that the centre point of the projected image is shifted by half the screen size. In other words, the centre point of the projected image falls together with the outline of the image in an On-Axis projection. Due to mechanical and optical limitations the shift range is limited as well.

All lenses have a shift range of 50% up, 50% down, 30% left, and 30% right. This range is valid for all throw ratios. Within these shift ranges the projector and lens perform excellently. Configuring the projector outside these shift ranges will result in a slight decline of image quality.

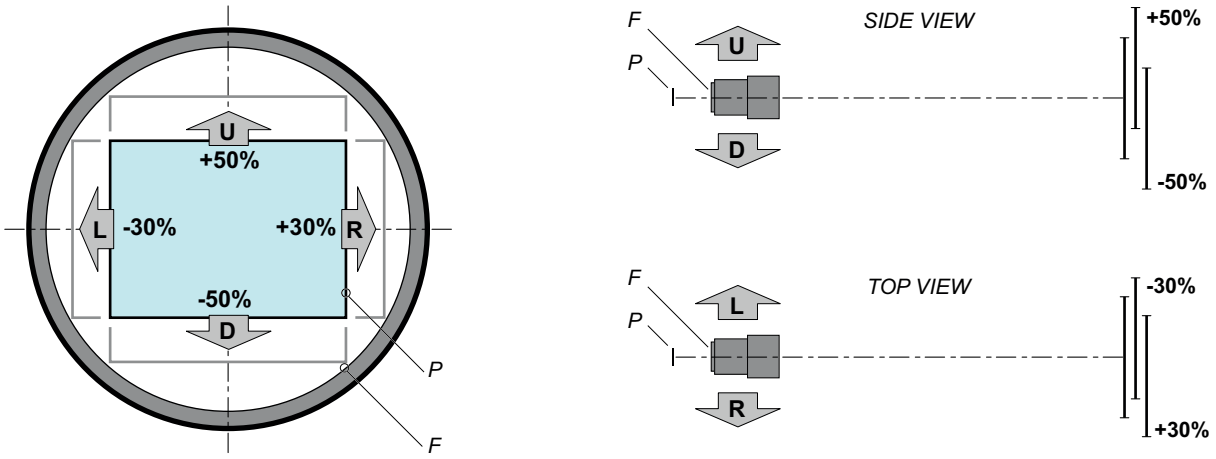


Image 13–10

**P** DMD.
**F** Field of view.

## How to shift the lens of the DP2K and DP4K B series?

1. Use the **up and down** arrow keys on the local keypad to shift the lens **vertically** and use the **left and right** arrow keys on the local keypad to shift the lens **horizontally**.

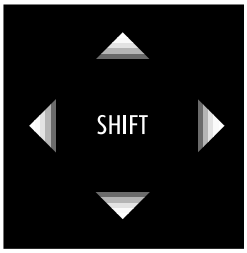


Image 13–11

## How to zoom in or out?

1. Is the zoom lens equipped with a motorized zoom?
   ► If yes, use the “+” and “-” **zoom keys** on the local keypad to zoom in or out.




Image 13–12

   ► If no, use the **zoom barrel** on the lens to zoom in or out.

## How to focus?

1. Use the “+” and “-” **focus keys** on the local keypad to focus the image on the screen.




Image 13–13

Take into account that the lens focus may slightly drift while the lens is warming up from cold to operation temperature. This is a typical phenomenon for projection lenses used with high brightness projectors. The operation temperature of the lens is reached after approximately 30 minutes projection of average video.

# 13.7 Back Focal Length adjustment

## When to adjust the Back Focal Length?

If a lens is used with a throw ratio suited for the application, (lens selection depends on projection distance and screen size) typically one would NEVER need to adjust the Back Focal Length of the projector.

A Back Focal Length adjustment is only required in case the Focus range of the installed lens does not capture the projection screen either for FLAT and/or for SCOPE. In other words, when it is impossible to focus the image on the screen for FLAT and/or for SCOPE. Note that the lenses for the B series projector series are varifocal. So, switching between FLAT and SCOPE (zoom action) requires a readjustment of the focus.

## What is Back Focal Length adjustment?

Back Focal Length adjustment means moving the lens plane (Lp), thus the Lens Holder front plate, closer to or further from the DMD plane. The closer the lens plane to the DMD plane the further the focus range (Fr) of the lens will be.

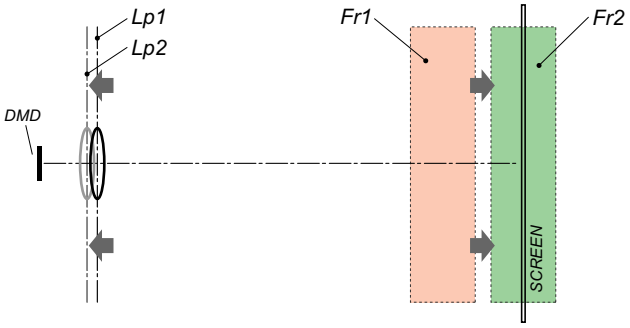


Image 13–14

Do not abuse the Back Focal Length adjustment of the Lens Holder. Neglecting this will result in loss of image quality because of the lens design. Cases requiring Back Focal Length adjustment normally indicate incorrect lens choice (throw ratio).

## Required tools

- Nut driver 10mm.
- Allen wrench 3mm.
- Nut driver 13mm.

## How to check the Back Focal Length

1. Ensure that the throw ratio of the installed lens matches with the requirements of the application (projection distance and screen size).
2. Ensure that the correct lens parameters are activated. (See user guide of the *"Communicator"* chapter *Installation* > *Advanced* > *Lens parameters*)

   *Caution:* Not using the correct lens parameters could result in lens damage.

3. Perform a lens **HOME & RETURN** operation. (See user guide of the *"Communicator"* chapter *Installation* > *Advanced* > *Lens parameters*)
4. Project the green focus test pattern. (screen file "no masking" or "no "crop")

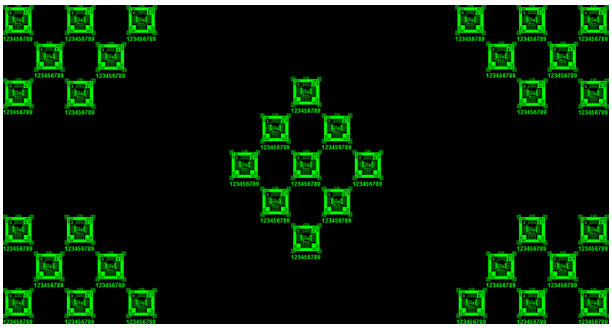

Image 13–15

5. Zoom the lens for maximum image on the screen (**WIDE**).

6. Is it possible to focus the center of the projected image?
   ► If yes, the Back Focal Length is OK.
   ► If no, the Back Focal Length needs realignment. Proceed with the next procedure.

## How to adjust the Back Focal Length?

1. Unlock and loosen the 4 set screws (reference 11 Image 13–16) of the Lens Holder by 1 centimeter. Use a 10mm nut driver for the lock nuts (reference 21 Image 13–16) and use a 3mm Allen wrench for the set screws.

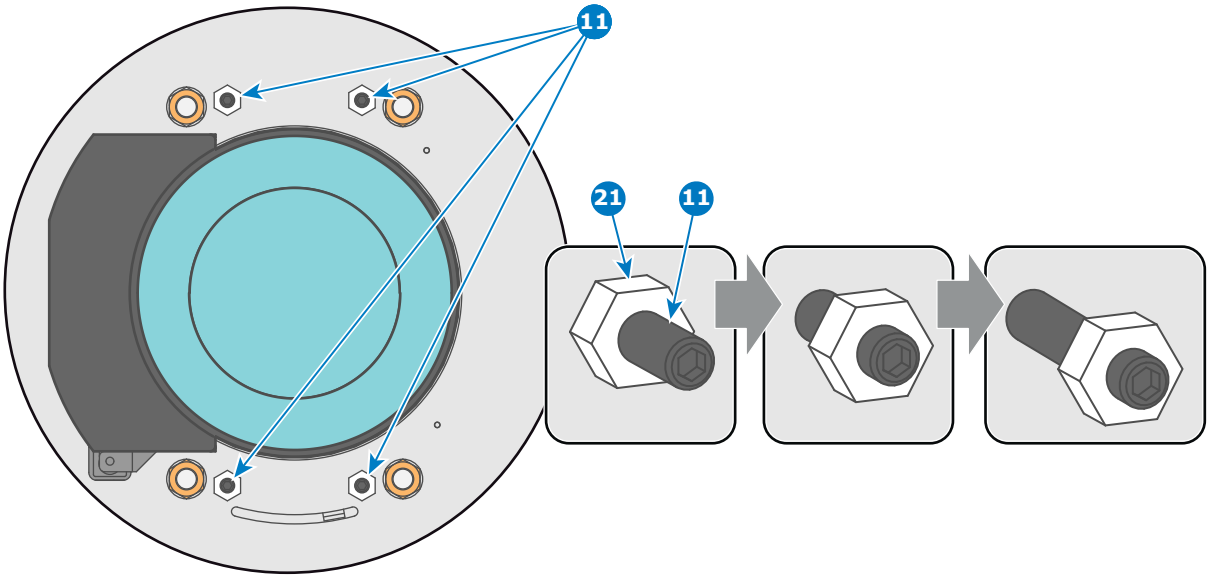


Image 13–16

2. Fully loosen the Scheimpflug nut at the lower left of the Lens Holder (reference 4 Image 13–17). Use a 13mm nut driver.

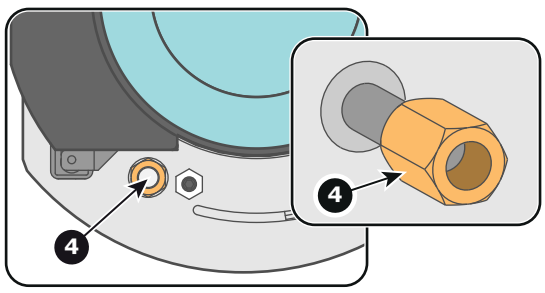


Image 13–17

3. Turn the three Scheimpflug adjustment nuts, reference 1, 2 and 3 Image 13–18, until the front of the nut (reference 5 Image 13–18) is equally aligned with the front of the threaded rod (reference 6 Image 13–18). Use a 13mm nut driver.

*Note:* This is the nominal position of the Lens Holder.

*Caution:* Do not remove any of the Scheimpflug adjustment nuts completely from the threaded rod. Otherwise the lens holder front plate with lens will fall off.

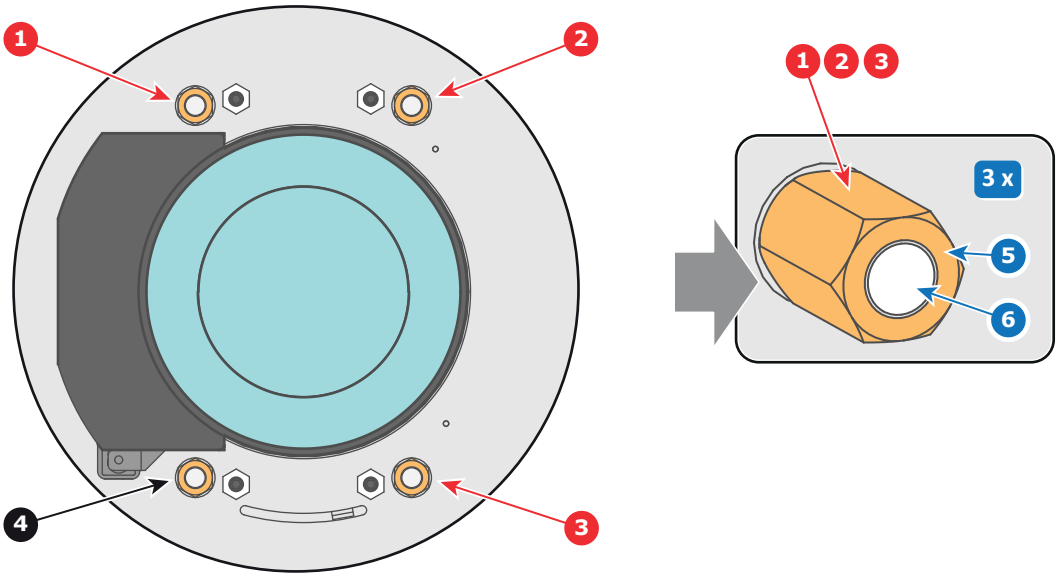


Image 13–18

4. Zoom the lens for maximum image on the screen (**WIDE**) and focus the center of the projected image using the motorized focus control (Local Keypad).

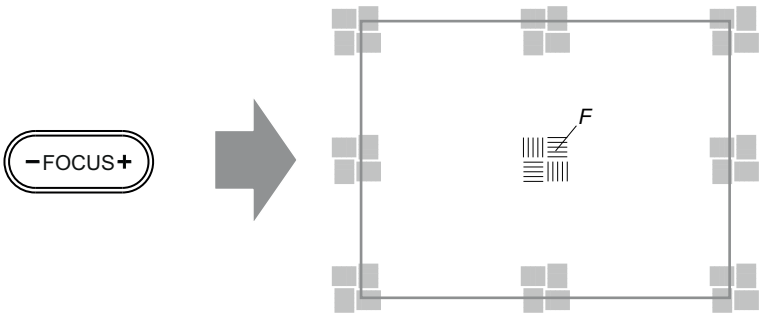


Image 13–19

5. Is it possible to focus the center of the projected image using the motorized focus control (Local Keypad) ? Ensure that the lens is zoomed for maximum image on the screen (**WIDE**).
   ► If yes, nominal position is good for sharp focus in the middle of the projected image. Proceed with step 6.
   ► If no, obtain the best possible focus in the center of the projected image using the motorized focus control and then turn the three Scheimpflug adjustment nuts, reference 1, 2 and 3 Image 13–20, equally in or out until the center of the projected image is sharp. **Attention:** Keep in mind the turning direction of the Scheimpflug adjustment nuts for further adjustment instructions in this procedure.

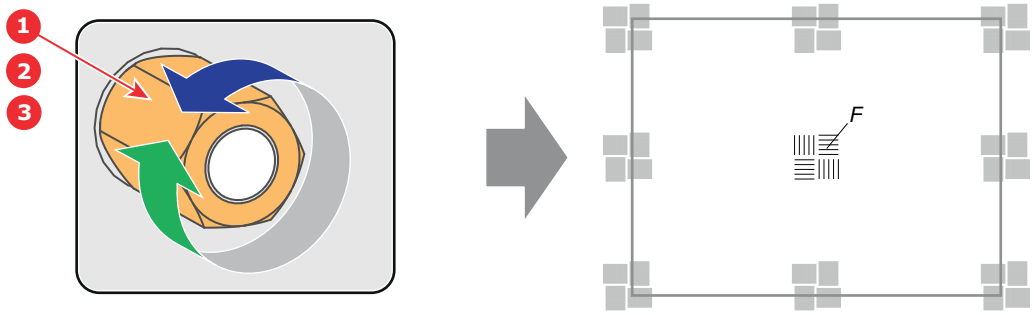


Image 13–20

6. Zoom the lens for minimum image on the screen (**TELE**) and focus the center of the projected image using the motorized focus control (Local Keypad).

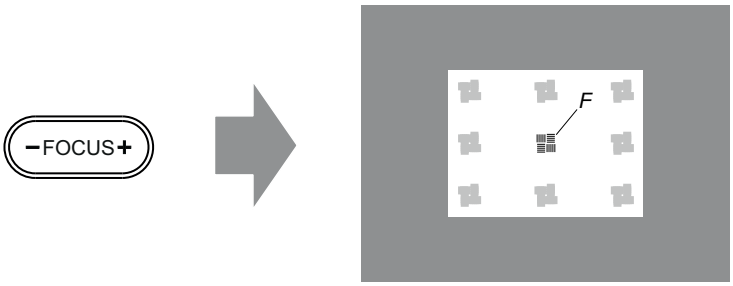


Image 13–21

7. Is it possible to focus the center of the projected image using the motorized focus control (Local Keypad) ? Ensure that the lens is zoomed for minimum image on the screen (**TELE**).
   ► If yes, no further adjustment actions required. Proceed with step 8.
   ► If no, obtain the best possible focus in the center of the projected image using the motorized focus control and then turn the three Scheimpflug adjustment nuts, reference 1, 2 and 3 Image 13–22, equally in or out until the center of the projected image is sharp. **Note**: the same turning direction as in step 5 is applicable.

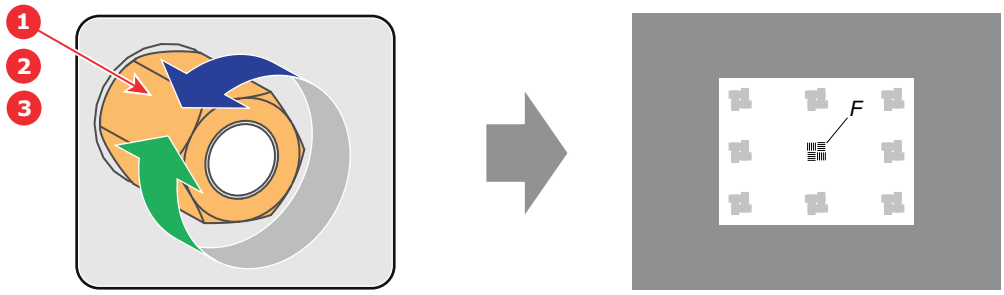


Image 13–22

8. Check if it is possible to focus the center of the projected image using the motorized focus control (Local Keypad) for **WIDE** and for **TELE**.
   ► If yes, the Back Focal Length is correctly adjusted.
   ► If no, repeat with step 4.

9. Is the projected image in the corners as sharp as in the middle?
   ► If yes, proceed with the procedure “Fixation of the Lens Holder front plate”, page 326.
   ► If no, Scheimpflug adjustment is required. See procedure “Scheimpflug adjustment”, page 322, prior to fixate the Lens Holder front plate. **CAUTION**: Skip the action, in the Scheimpflug adjustment procedure, to turn the three Scheimpflug adjustment nuts until the front of the nut is equally aligned with the front of the threaded rod!

# 13.8 Scheimpflug adjustment

## What has to be done ?

The lens holder has to be adjusted so that the “sharp focus plane” of the projected image falls together with the plane of the screen (Fp1→Fp2). This is achieved by changing the distance between the DMD plane and the lens plane (Lp1→Lp2). The closer the lens plane comes to the DMD plane the further the sharp focus plane will be. It can sometimes happen that you won't be able to get a complete focused image on the screen due to a tilt (or swing) of the lens plane with respect to the DMD plane. This is also known as Sheimpflug's law. To solve this the lens plane must be placed parallel with the DMD plane. This can be achieved by turning the lens holder to remove the tilt (or swing) between lens plane and DMD plane (Lp3→Lp4).

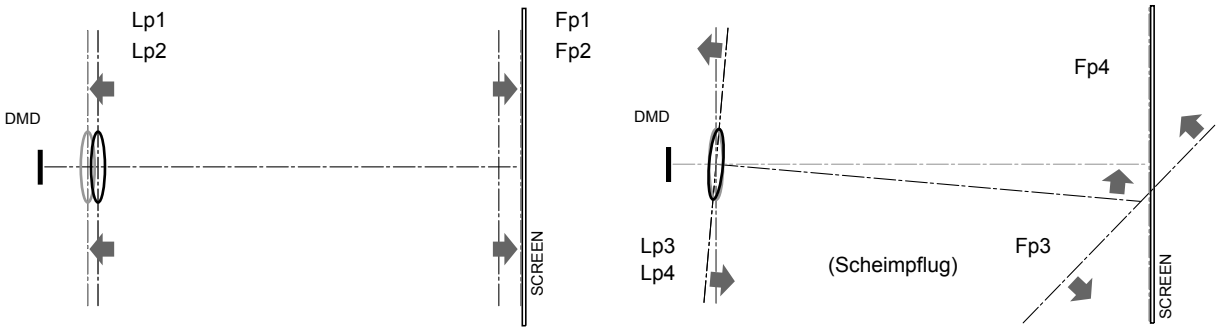


Image 13–23 Scheimpflug principle

**Scheimpflug principle**

The "plane of sharp focus" can be changed so that any plane can be brought into sharp focus. When the DMD plane and lens plane are parallel, the plane of sharp focus will also be parallel to these two planes. If, however, the lens plane is tilted with respect to the DMD plane, the plane of sharp focus will also be tilted according to geometrical and optical properties. The DMD plane, the principal lens plane and the sharp focus plane will intersect in a line below the projector for downward lens tilt.

## Scheimpflug adjustment points

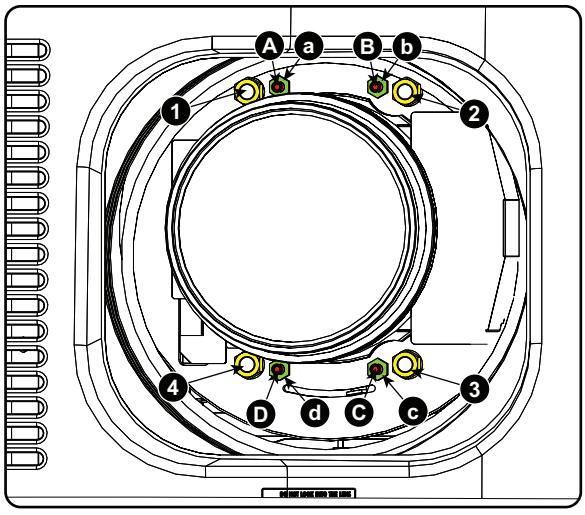


Image 13–24 Scheimpflug adjustments

| Indication on drawing | Function |
|---|---|
| 1, 2 and 3 | Scheimpflug adjustment nuts |
| 4 | Locking nut |
| A, B, C and D | Set screws |
| a, b, c and d | lock nuts |

1, 2 and 3 are adjustment points.

4 is a locking point and NOT used during Scheimpflug adjustment.

## Required tools

- Allen key 3 mm
- Nut driver 13 mm
- Nut driver 10 mm

## How to adjust

1. Project a green focus pattern. For a 4K projector, use the 4K test pattern. Otherwise, use the 2K test pattern.

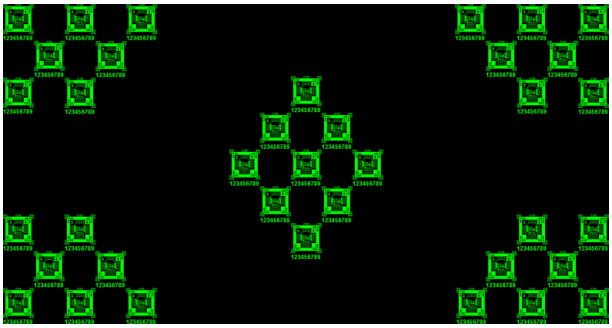

Image 13–25

2. Loosen the lock nuts (a, b, c and d). See Image 13–24.
3. Loosen the 4 set screws (A, B, C and D) by 1 cm. See Image 13–24.
4. Fully loosen lock nut 4. See Image 13–24.
5. Optimize the focus of the projected image as follows:
   1. Turn the Scheimpflug adjustment nuts 1, 2 and 3 until the front of the nut is equally aligned with the front of the threaded rod.
   2. Adjust the focus in the center of the screen (F) using the motorized focus control.

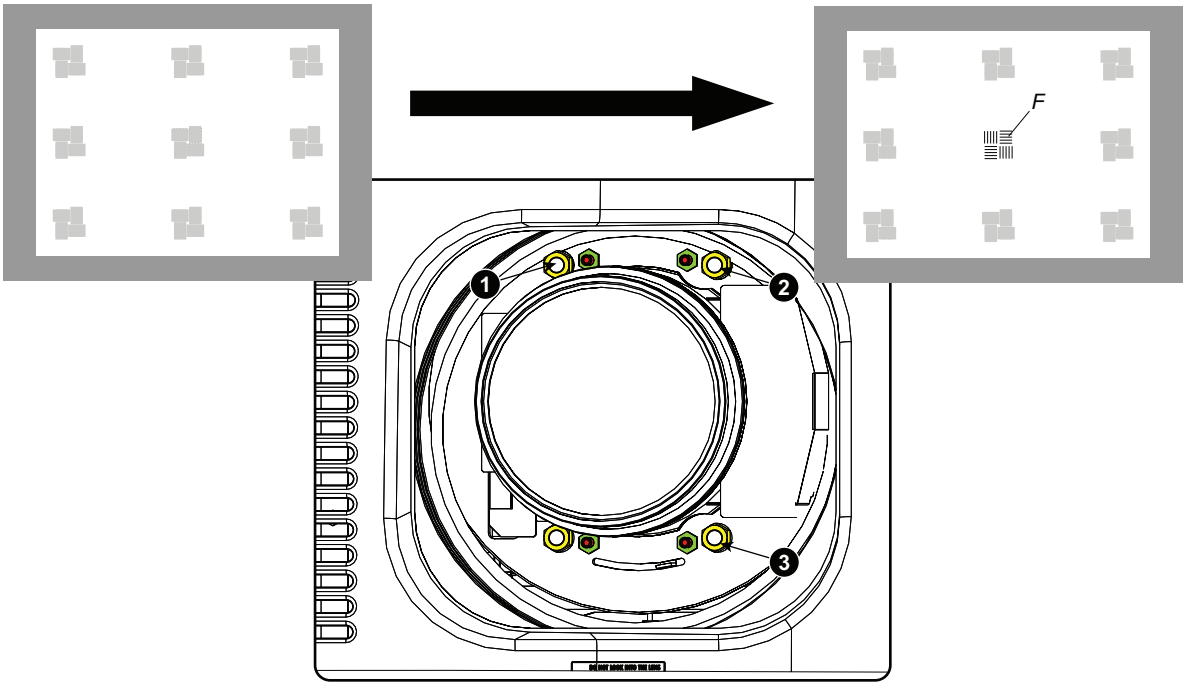


Image 13–26 Center focusing

6. Sharpen bottom left corner of the screen by adjusting nut 1.

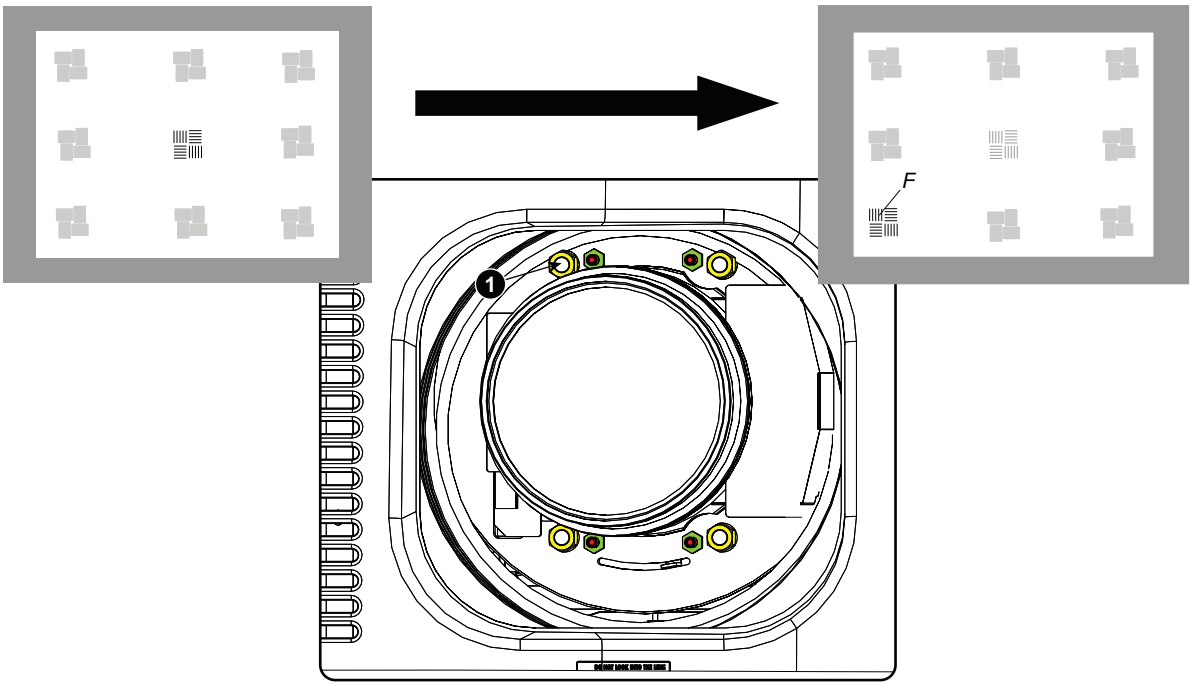


Image 13–27 Left bottom focusing

7. Sharpen bottom right corner of the screen by adjusting nut 2.

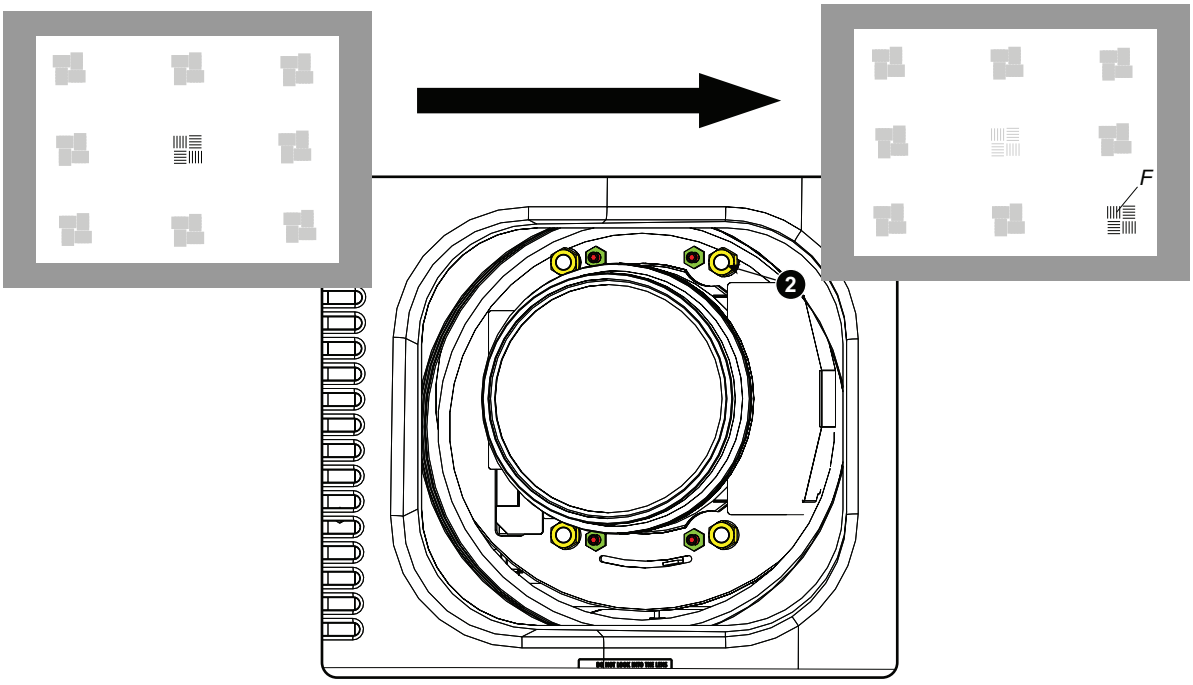


Image 13–28 Right bottom focusing

8. Sharpen top right corner of the screen by adjusting nut 3

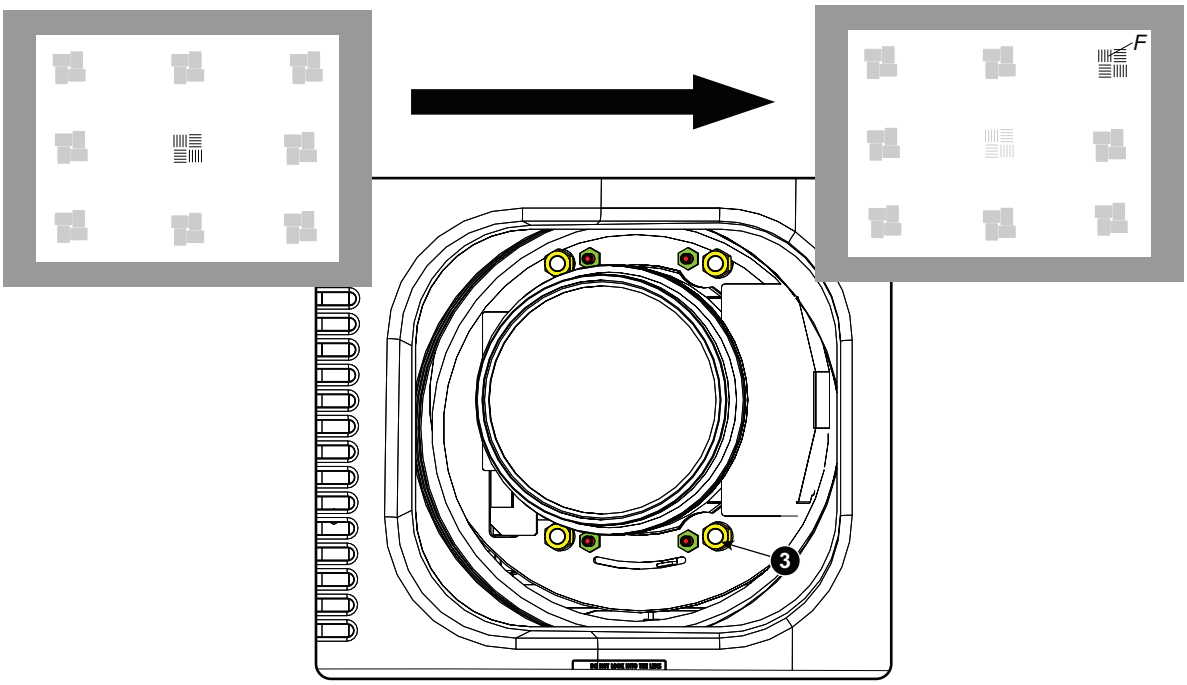


Image 13–29 Corner focusing

9. Repeat from go to step 6 until the projected focus pattern is as sharp as possible in the center, left, right, top and bottom of the screen.
10. Continue with the *Fixation of the lens holder front plate* procedure.

# 13.9 Fixation of the Lens Holder front plate

## When fixing the Lens Holder front plate

After performing the procedure for Scheimpflug adjustment or Back Focal Length adjustment the Lens Holder front plate must be secured in such a way that it doesn't disturb the result of the adjustment.

## Required tools

- 10mm nut driver.
- 3mm Allen wrench.
- 13mm nut driver.

## How to fix the Lens Holder front plate

Start the fixation as follows (steps must be followed strictly) :

1. Project the framing test pattern for FLAT & SCOPE.
2. Zoom the projected image until the edges of the projected test pattern matches with the edges of the projection screen.

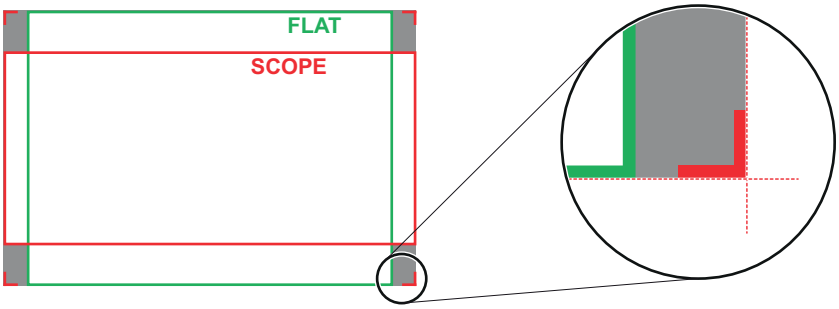


Image 13–30

3. Turn in the three set screws indicated with reference 11 Image 13–31 without disturbing the projected image. Tighten lightly . Do not turn in the set screw at the lower left of the Lens Holder!

   *Note:* Ensure that the edges of the projected test pattern remain in place on the screen. Any movement of the image will affect the Scheimpflug adjustment.

4. Fasten the lock nut (reference 21 Image 13–31) of the three set screws. Use a 10mm nut driver. Ensure the image doesn't move.

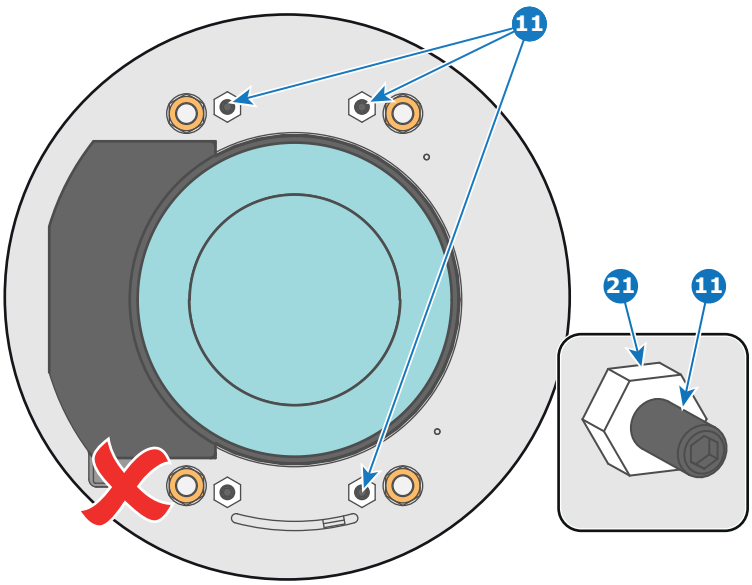


Image 13–31

5. Gently turn (by hand) the Scheimpflug adjustment nut at the lower left of the Lens Holder (reference 4 Image 13–32) against the Lens Holder front plate without disturbing the projected image.
6. Turn in the set screw at the lower left of the Lens Holder (reference 14 Image 13–32) without disturbing the projected image. Use a 3mm Allen wrench.

   *Note:* Ensure that the edges of the projected test pattern remain in place on the screen. Any movement of the image will affect the Scheimpflug adjustment.

   *Tip:* Fasten the set screw and the Scheimpflug nut alternately, without disturbing the projected image, until the Scheimpflug nut and set screw are completely tightened.

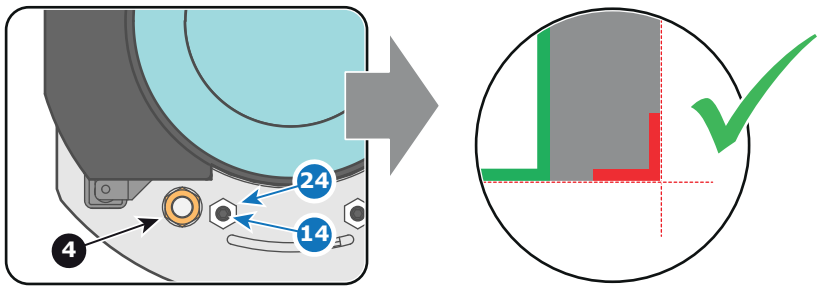


Image 13–32

7. Fasten the lock nut at the lower left of the Lens Holder. Use a 10mm nut driver.

# 13.10 Cleaning the lens

To minimize the possibility of damage to optical coatings, or scratches to lens surfaces follow the cleaning procedure as described here precisely.

## Required tools

- Compressed air
- Clean micro fiber lens cleaning cloth (e.g. Toraysee® cloth(s))
- Clean cotton cloth
- Lens cleaner (e.g. ZEISS lens cleaner, Purosol™ or other water based lens cleaner products)

## How to clean the lens?

1. Blow off dust with clean compressed air (or pressurized air cans[3]) .
2. Clean with lens cleaner together with a clean lens cleaning cloth to remove the dust and contamination. Use big wipes in one single direction.

   *Warning:* Do not wipe back and forwards across the lens surface as this tends to grind dirt into the coating.
3. Use a dry lens cleaning cloth to remove left liquid or stripes. Polish with small circles.
4. If there are still fingerprints on the surface, wipe them off with lens cleaner together with a clean lens cleaning cloth. Polish again with a dry one.

If smears occur when cleaning lenses, replace the cloth. Smears are the first indication of a dirty cloth.

3. Pressurized air cans are not efficient if there is too much dust on the surface, the pressure is too low

# 13.11 Removal of the Lens Holder

To remove the Lens Holder from the projector the Lens, the front cover and the left side cover have to be removed first. This procedure assumes that the Lens, front cover and left side cover are already removed.

## Required tools

- 2mm Allen wrench.
- 3mm Allen wrench.
- 5mm Allen wrench.

## How to remove the Lens Holder from the projector?

1. Disconnect all ground wires at the top of the Lens Holder. Use a 3mm Allen wrench to loosen the two screws (reference 5) and washers (reference 6) which fasten the ground wires. The left side of the Lens Holder has three wire units (reference 1, 2 and 3) and the right side of the Lens Holder has one ground wire (reference 4).

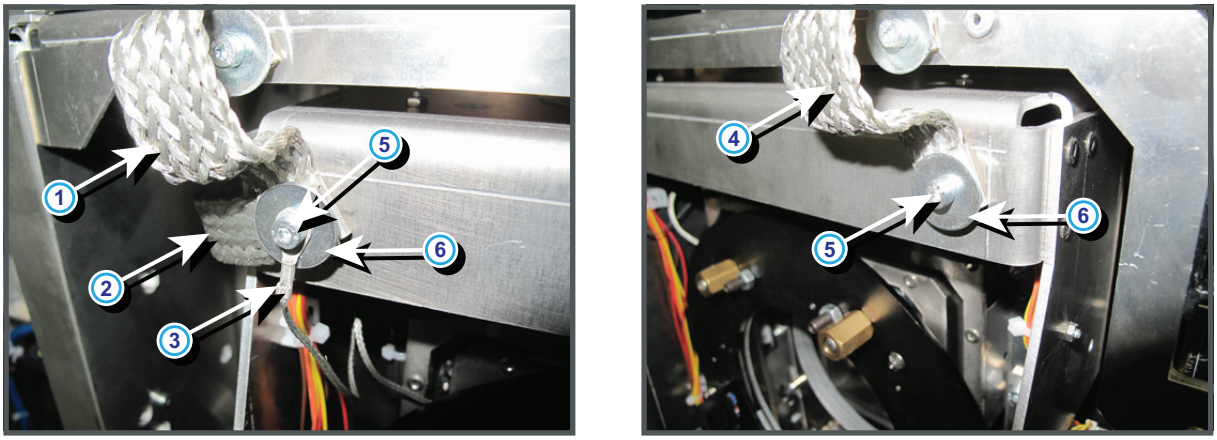


Image 13–33

2. Disconnect all wire units (9 in total) from the Lens Holder. The wire units are located at the left bottom of the Lens Holder.

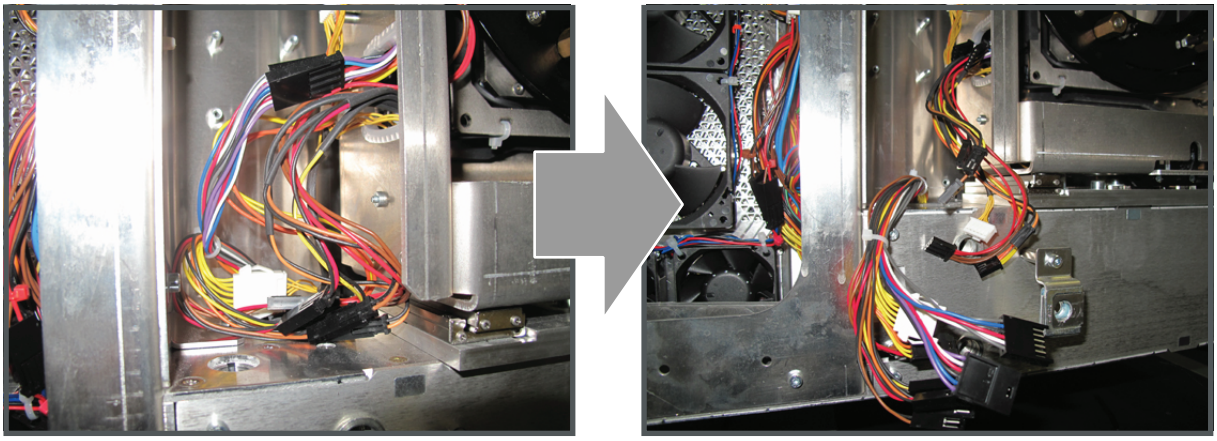

Image 13–34

3. Loosen the wing nut (reference 1) located on top of the Lens Holder assembly by turning it 2 turns counterclockwise.

4. Turn out the hex socket screw (reference 2) which is connected to the stabilizer wheels. Use a 2mm Allen wrench. As a result the Lens Holder stabilizer wheels (reference 3) retract from the Lens Holder assembly. This will make it possible to remove the Lens Holder assembly from the projector.

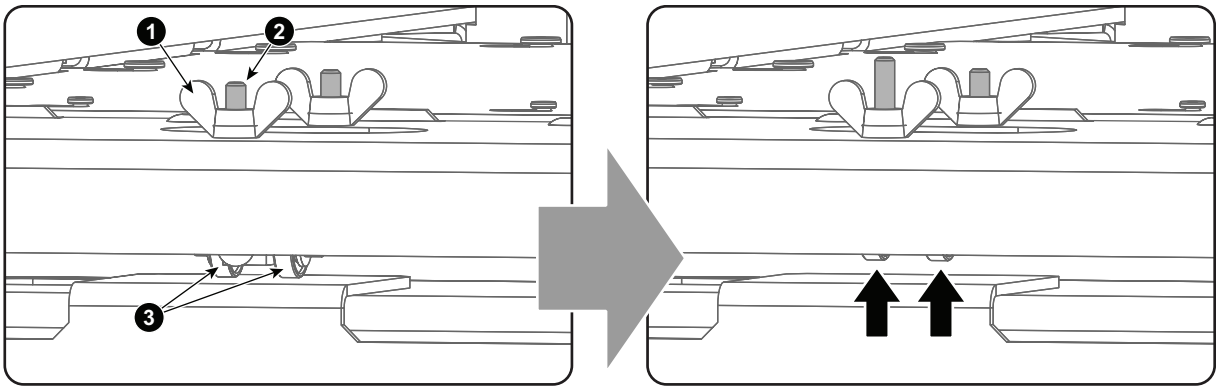


Image 13–35

5. Loosen the four hexagon socket head cap screws (reference 8) at the base of the Lens Holder assembly. Use a 5 mm Allen wrench.

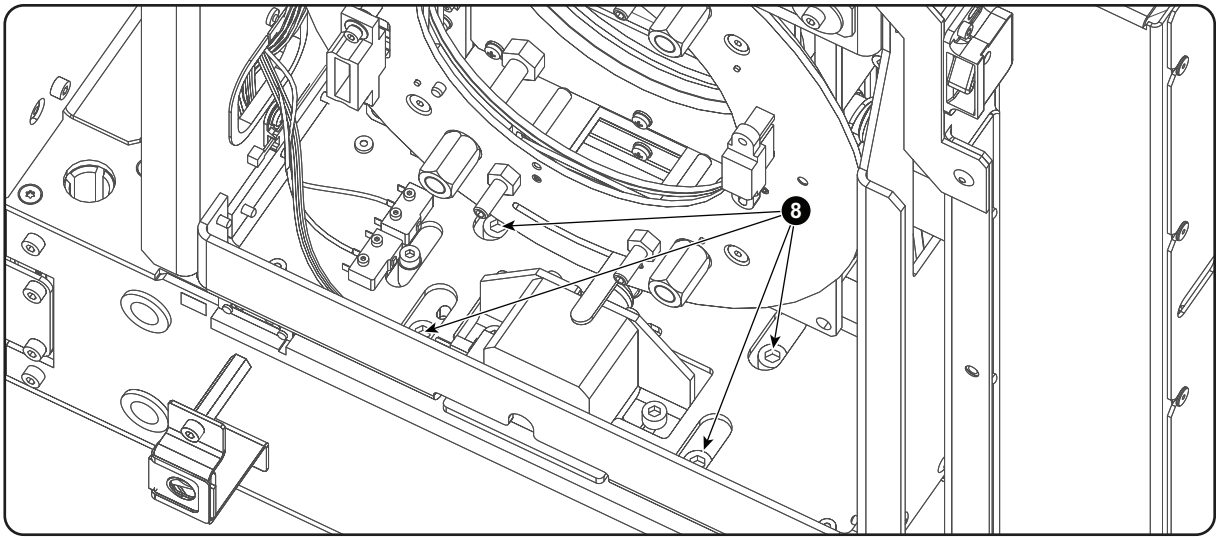


Image 13–36

6. Lift up the Lens Holder a few millimeters and pull it out of the Lens Holder compartment.

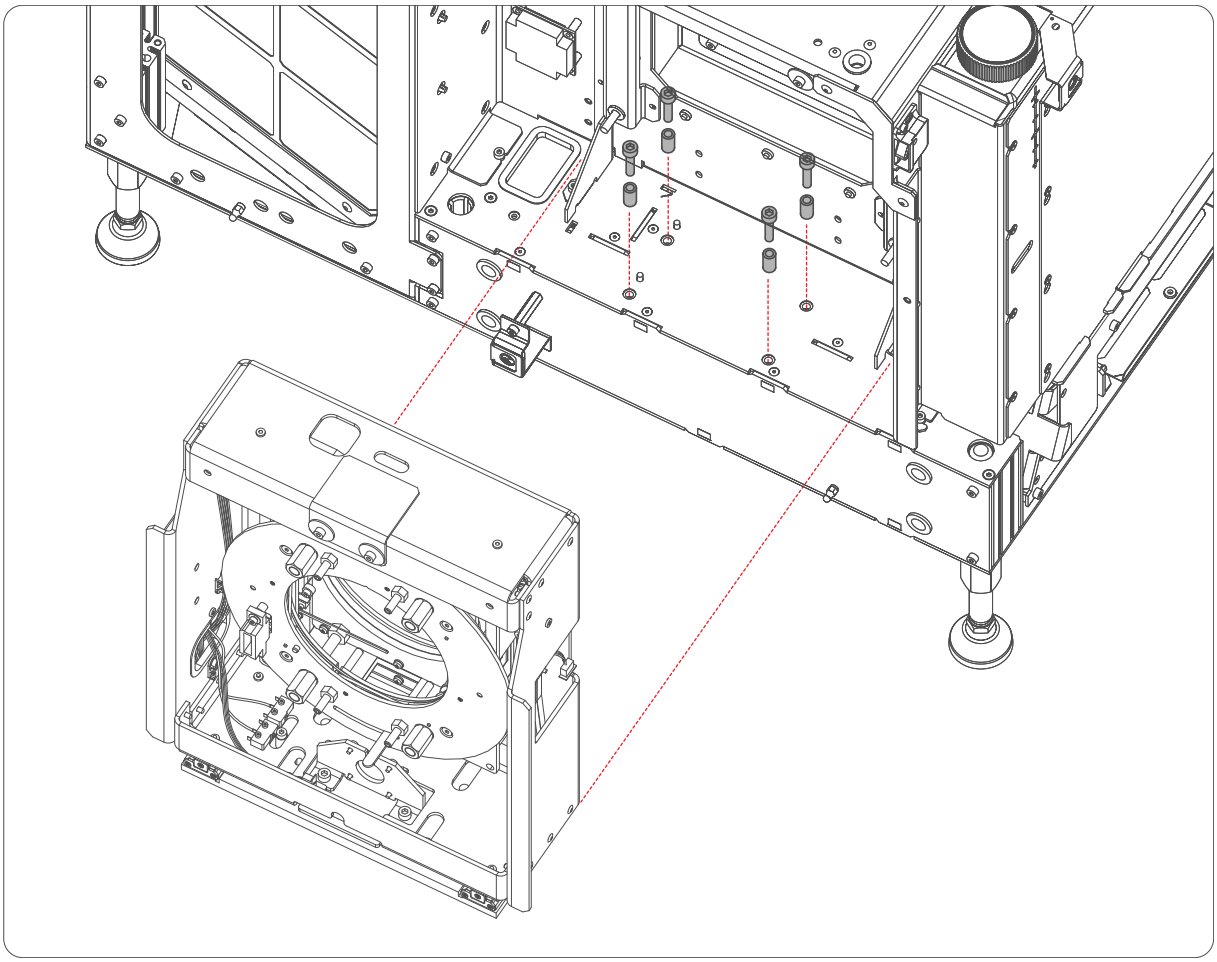

Image 13–37

# 13.12 Installation of the Lens Holder

## Required tools

- 3mm Allen wrench.
- 5mm Allen wrench.

## How to install the Lens Holder assembly in the projector?

1. Make sure that the Lens Holder stabilizer above the Lens Holder compartment is retracted upwards. Both wing screws (reference 1) must be turned in as much as possible.

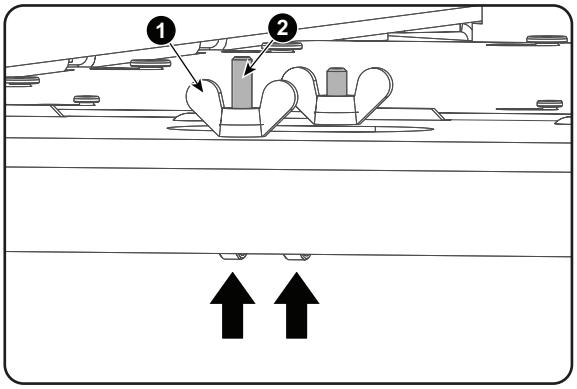


Image 13–38

2. Place the Lens Holder assembly in position. Note that the bottom of the assembly is provided with positioning holes and slots which must match with the positioning pins at the base of the compartment.
3. Fasten the Lens Holder assembly with four hexagon socket head cap screws. Provide each screw (reference 8) with a spacer (reference 9). Use a 5mm Allen wrench.

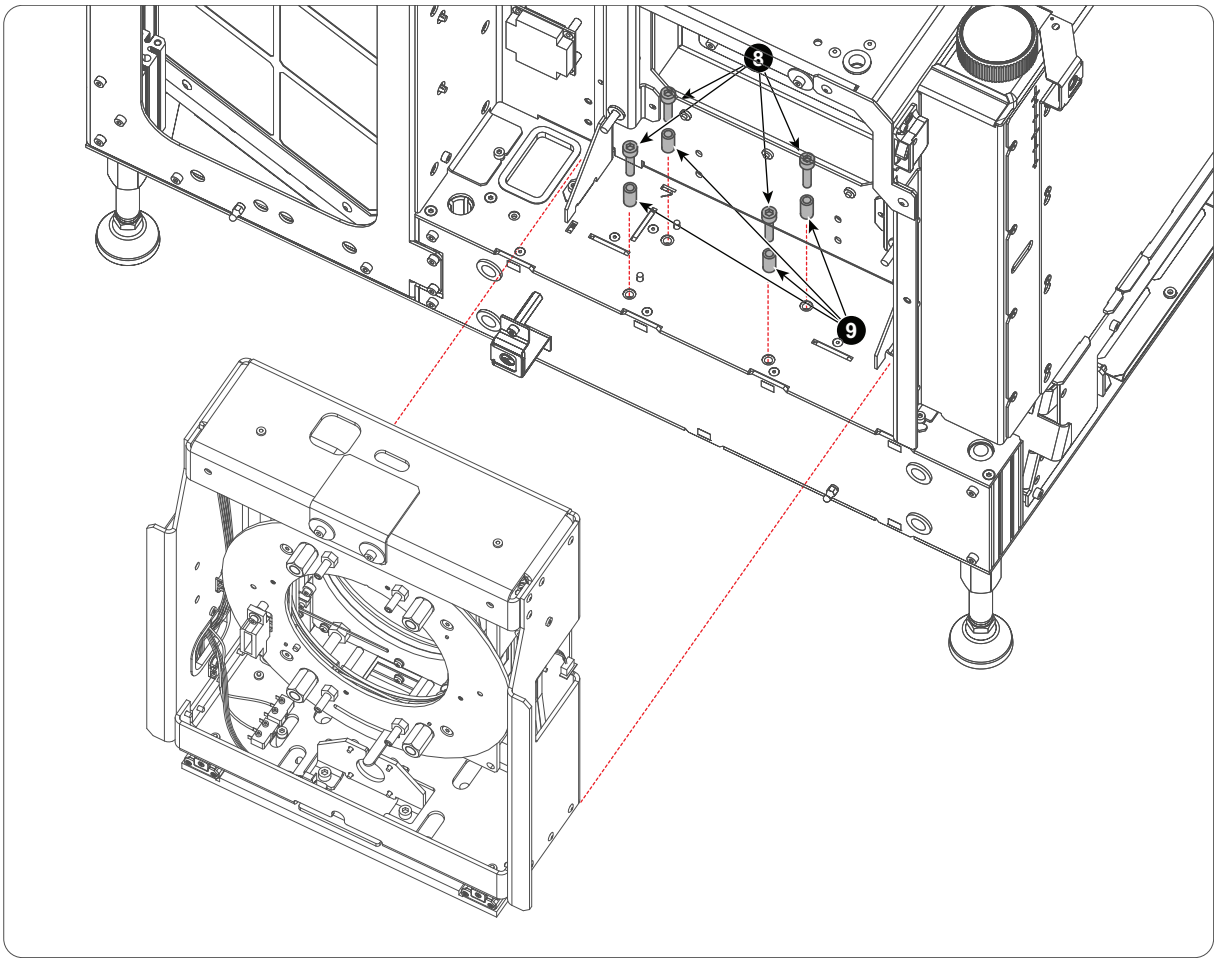


Image 13–39

4. Lower the Lens Holder stabilizer above the Lens Holder by turning the wing screws (reference 1) counterclockwise until the small metal wheels (reference 2) of the Lens Holder stabilizer touch the upper plate of the Lens Holder assembly.

   *Caution:* Only the small metal wheels of the Lens Holder stabilizer may touch the upper plate of the Lens Holder assembly. No other parts!

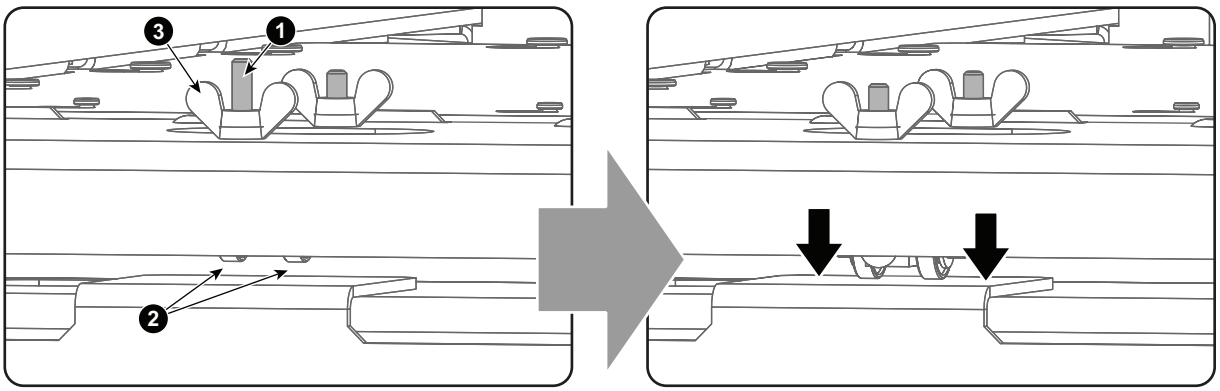


Image 13–40

5. Connect all wire units (9 in total) from the Lens Holder with the wire units of the projector.

   *Caution:* Respect the colors of the wire units. Connect the wire units of the same color with each other!

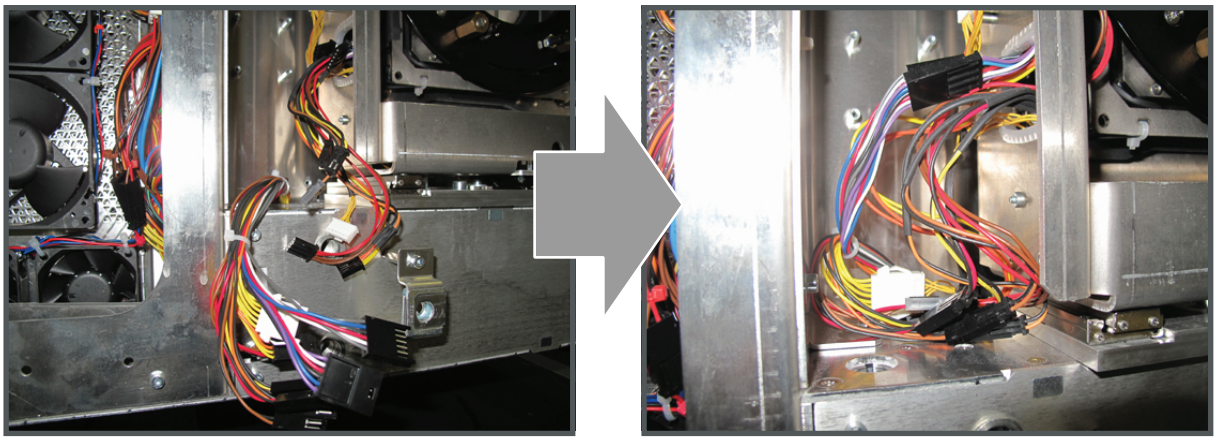

Image 13–41

6. Connect all ground wires at the top of the Lens Holder. Three big flat wires (reference 1 and 2) and one small wire (reference 3) at the left side. One big flat wire (reference 4) at the right side. Use a 3mm Allen wrench to fasten the two screws of the ground wires. Provide each screw (reference 5) with a big plain washer (reference 6).

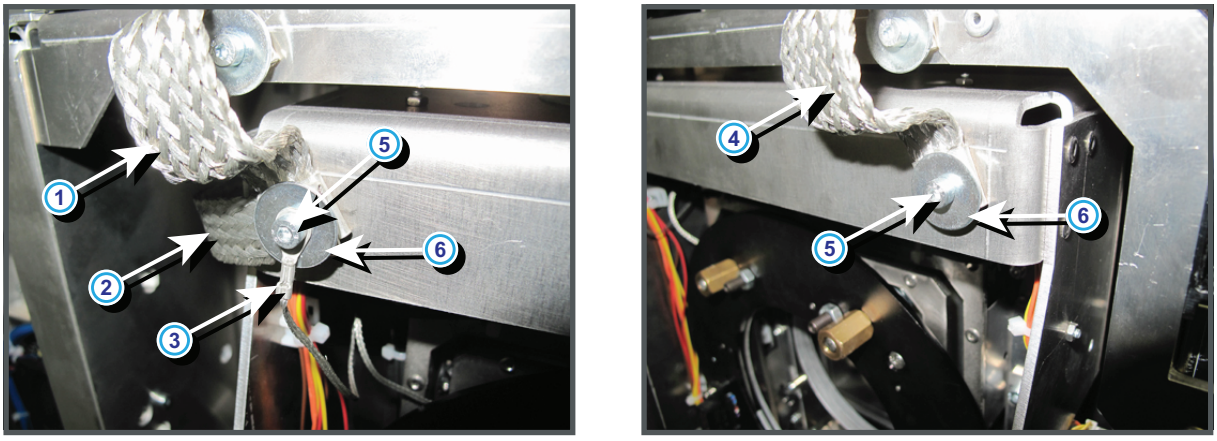


Image 13–42

Proceed with reinstalling the left side cover, the front cover and the Lens of the projector.

The Lens Holder has to be adjusted after installation. See procedure “Scheimpflug adjustment”, page 322.

# 13.13 Replacement of the Vertical Shift stepper motor

This procedure assumes that the Lens Holder is removed from the projector.

## Required tools

- 3mm Allen wrench.
- 2.5mm Allen wrench.
- 10mm open end wrench.
- 13mm open end wrench.
- Set of pliers.

## Required parts

Cable tie.

## How to replace the Vertical Shift stepper motor of the Lens Holder?

1. Disconnect the Ground wire (reference 1 Image 13–43) from the Lens Holder housing. Use a 3mm Allen wrench.
2. Cut the cable tie (reference 2 Image 13–43) which fasten the wire unit of the socket on the Lens Holder front plate.

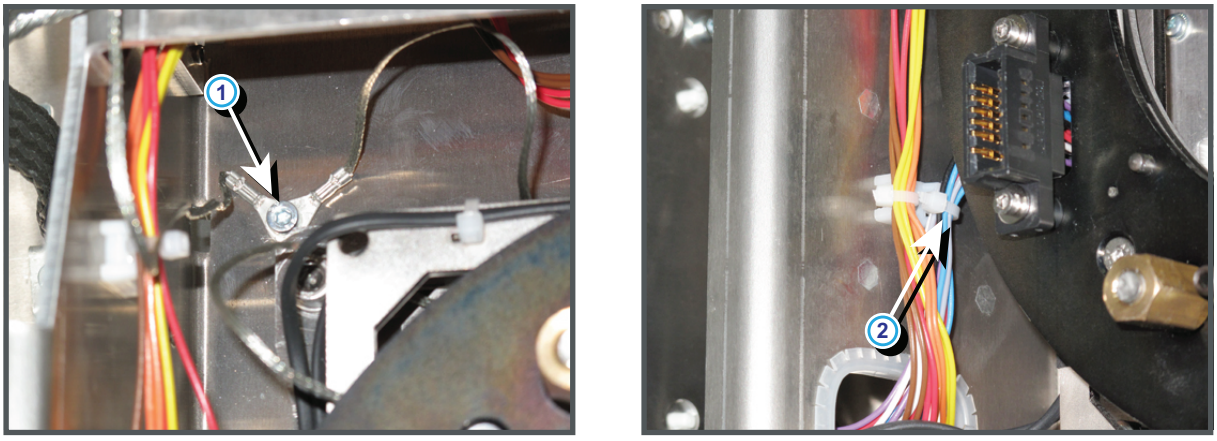


Image 13–43

3. Disconnect the wire units from the Vertical stepper motor (reference 3) and from the Horizontal stepper motor (reference 4) .

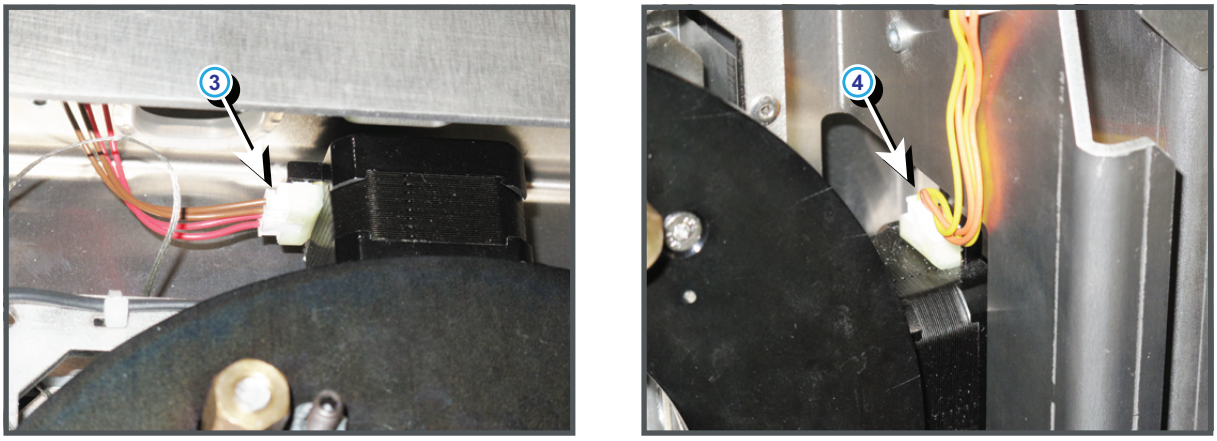


Image 13–44

4. Remove the inner Lens Holder assembly from the Lens Holder housing by loosen the four nuts at the rear (reference 7) and the four screws at the front (reference 5) as indicated. Use a 10mm open end wrench and a 5mm Allen wrench.

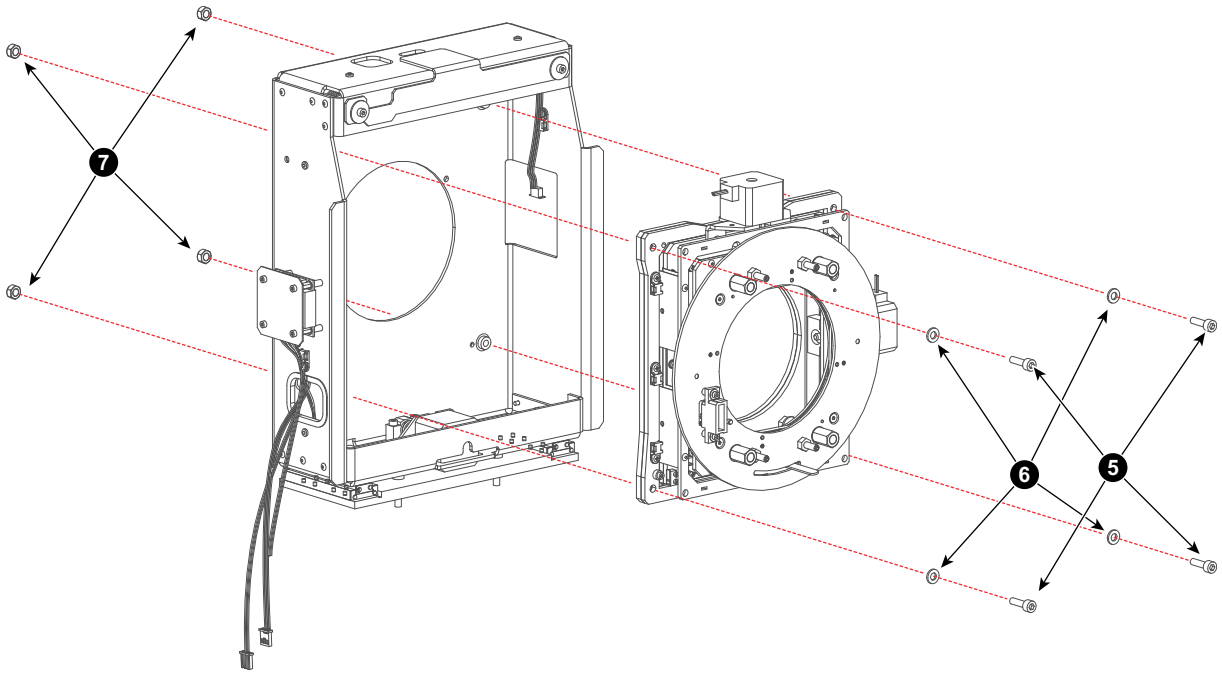


Image 13–45

5. Remove the front plate from the Lens Holder. Use a 13mm open end wrench to loosen the four big nuts (reference 7) as illustrated. It's not necessary to disconnect the Ground wire from the front plate. Just turn the front plate away for accessing the stepper motor.

   *Caution:* Do not loosen the three springs (reference 8 Image 13–46) of the adjustment mechanism.

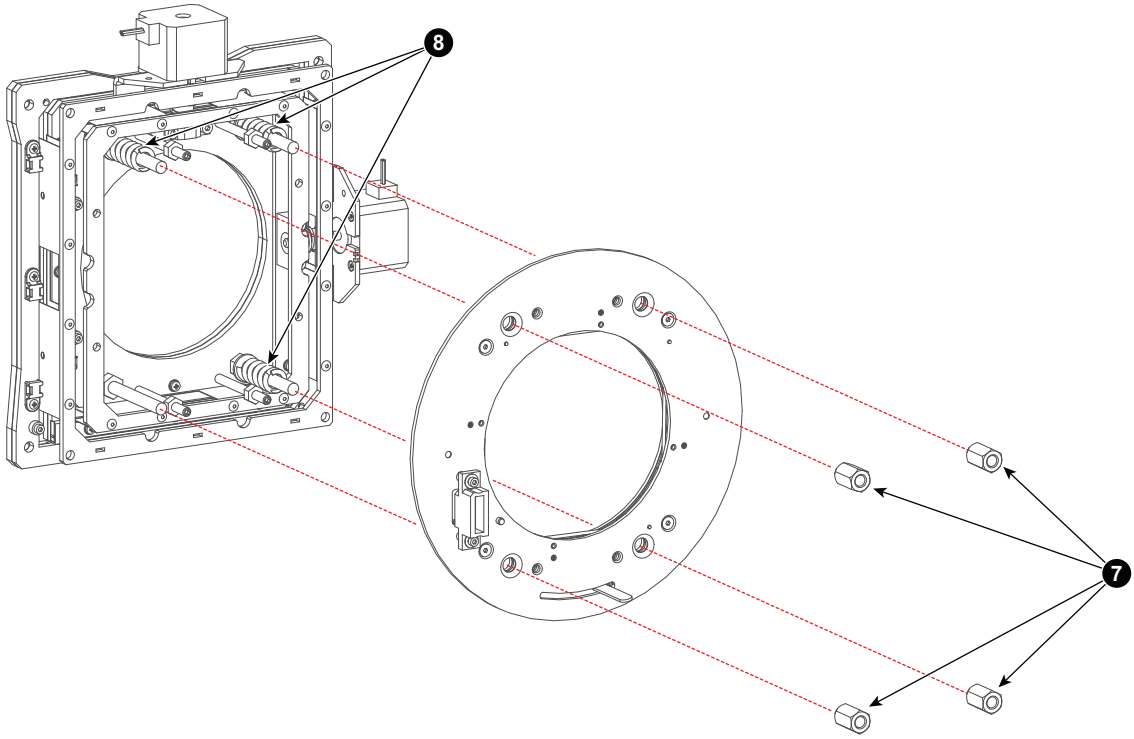


Image 13–46

6. Remove the Vertical stepper motor from the assembly by loosing the four screws (reference 9) as indicated. Use a 3mm Allen wrench.

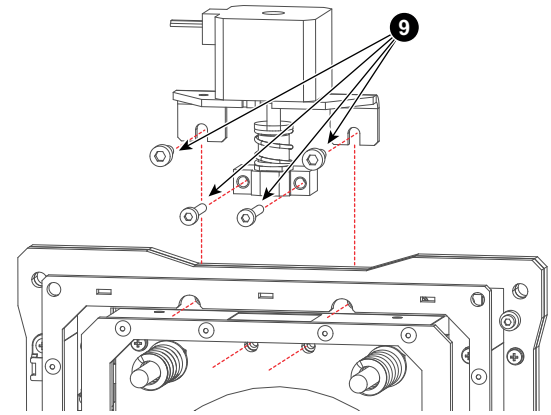


Image 13–47

7. Remove bracket and other parts from the old stepper motor and install these parts on the new stepper motor as illustrated. Use a 2.5mm Allen key for the four screws (reference 10) and a 10mm open end wrench.

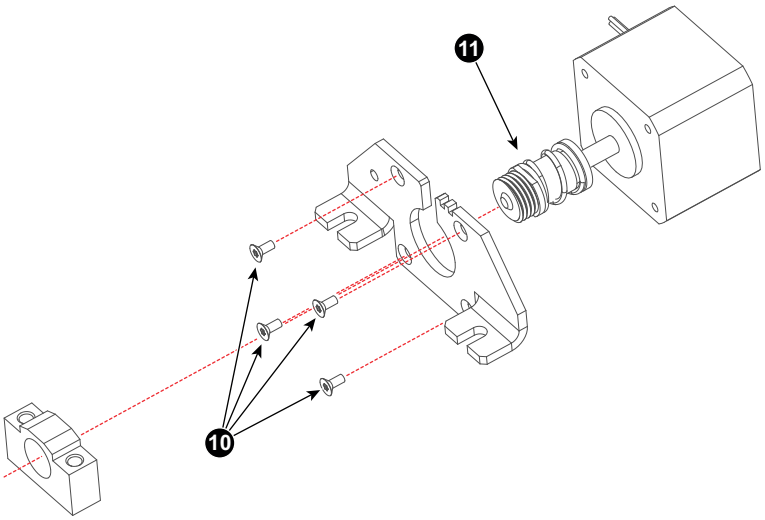


Image 13–48

8. Reinstall the stepper motor on the assembly as illustrated in Image 13–47. Fasten the four screws (reference 9) with a 3 mm Allen wrench.
9. Reinstall the front plate from the Lens Holder. Use a 13mm open end wrench to fasten the four big nuts (reference 7 Image 13–46).
10. Reinstall the inner Lens Holder assembly in the Lens Holder housing by fasten the four nuts and four screws (reference 7 and 5 Image 13–45). Use a 10mm open end wrench and a 5mm Allen wrench.
11. Reconnect the wire units of the Vertical stepper motor (reference 3 Image 13–44) and of the Horizontal stepper motor (reference 4 Image 13–44) .
12. Use a cable tie (reference 2 ) to fasten the wire unit of the socket on the Lens Holder front plate as illustrated in Image 13–43.
13. Reconnect the Ground wire (reference 1 Image 13–43) from the Lens Holder housing. Use a 3mm Allen wrench to fasten the screw. Note that two Ground wires have to be connected together with one screw.

Proceed with reinstalling the Lens Holder. See procedure “Installation of the Lens Holder”, page 332.

The Lens Holder has to be adjusted after installation. See procedure “Scheimpflug adjustment”, page 322.

# 13.14 Replacement of the Horizontal Shift stepper motor

This procedure assumes that the Lens Holder is removed from the projector.

## Required tools

- 3mm Allen wrench.
- 2.5mm Allen wrench.
- 10mm open end wrench.
- 13mm open end wrench.
- Set of pliers.

## Required parts

Cable tie.

## How to replace the Horizontal Shift stepper motor of the Lens Holder?

1. Disconnect the Ground wire (reference 1 Image 13–49) from the Lens Holder housing. Use a 3mm Allen wrench.
2. Cut the cable tie (reference 2 Image 13–49) which fasten the wire unit of the socket on the Lens Holder front plate.

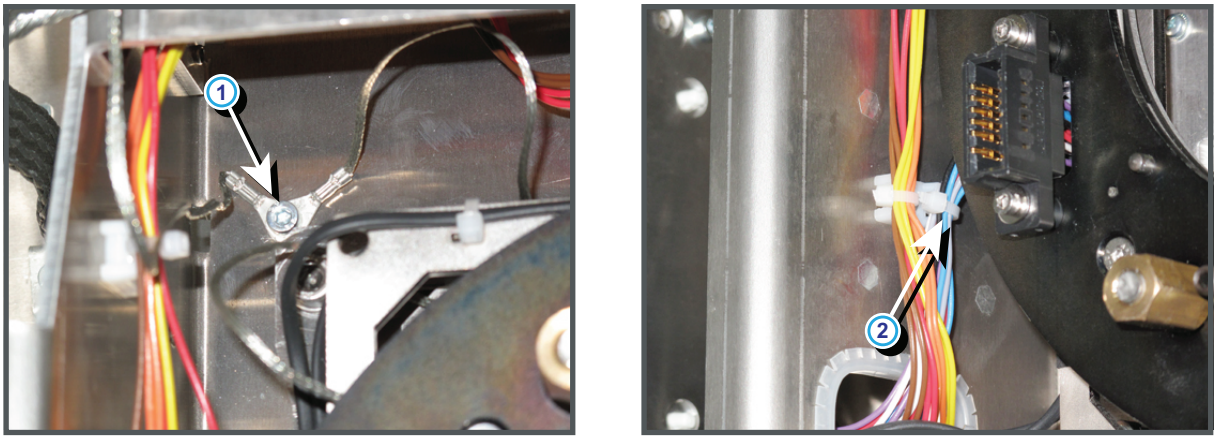


Image 13–49

3. Disconnect the wire units from the Vertical stepper motor (reference 3) and from the Horizontal stepper motor (reference 4) .

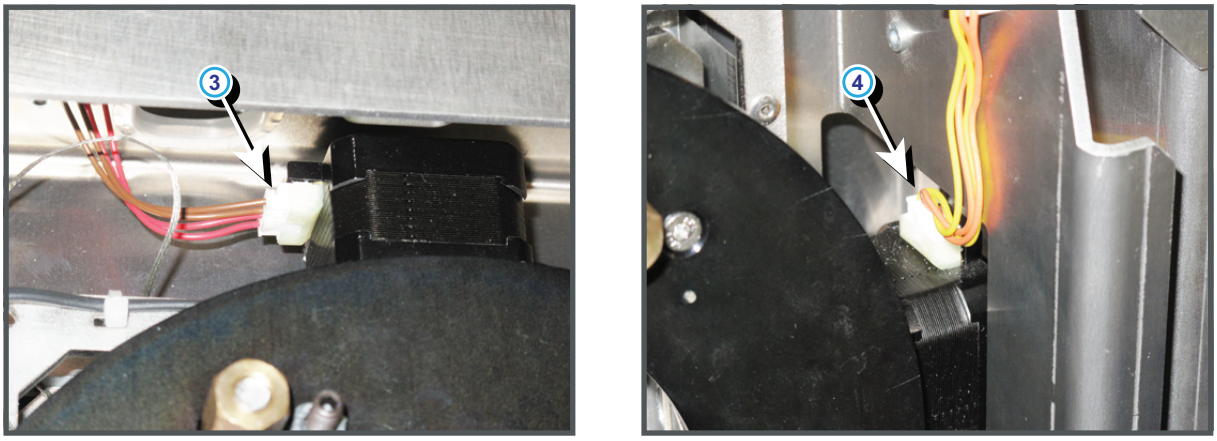


Image 13–50

4. Remove the inner Lens Holder assembly from the Lens Holder housing by loosen the four nuts at the rear (reference 7) and the four screws at the front (reference 5) as indicated. Use a 10mm open end wrench and a 5mm Allen wrench.

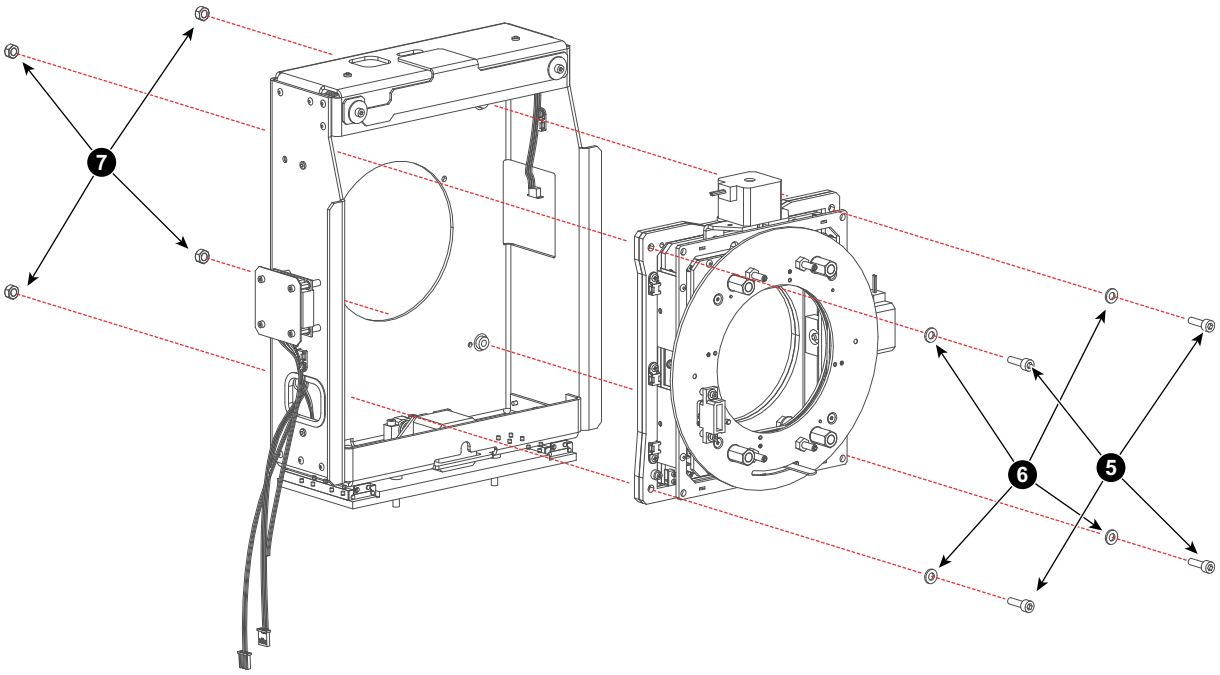


Image 13–51

5. Remove the front plate from the Lens Holder. Use a 13mm open end wrench to loosen the four big nuts (reference 7) as illustrated. It's not necessary to disconnect the Ground wire from the front plate. Just turn the front plate away for accessing the stepper motor.

   *Caution:* Do not loosen the three springs (reference 8 Image 13–52) of the adjustment mechanism.

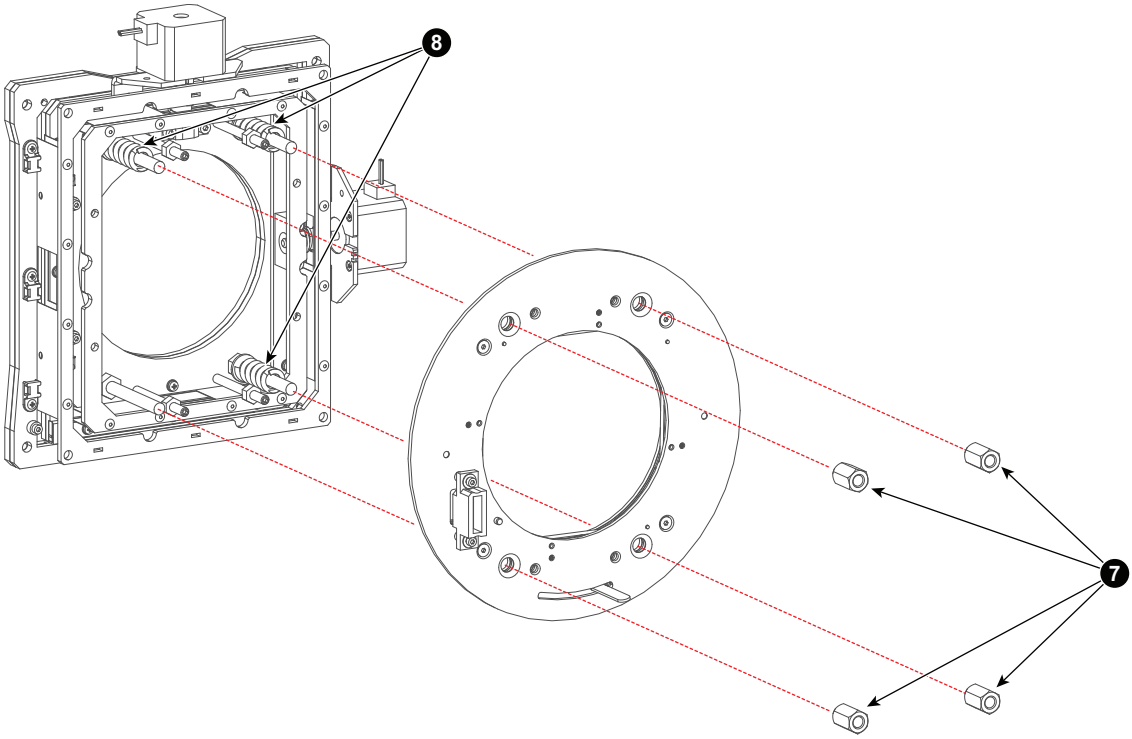


Image 13–52

6. Remove the Horizontal stepper motor from the assembly by loosing the four screws (reference 9) as indicated. Use a 3mm Allen wrench.

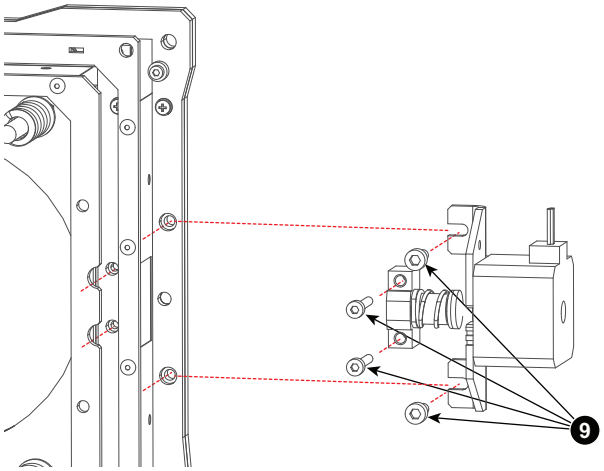


Image 13–53

7. Remove bracket and other parts from the old stepper motor and install these parts on the new stepper motor as illustrated. Use a 2.5mm Allen key for the four screws (reference 10) and a 10mm open end wrench.

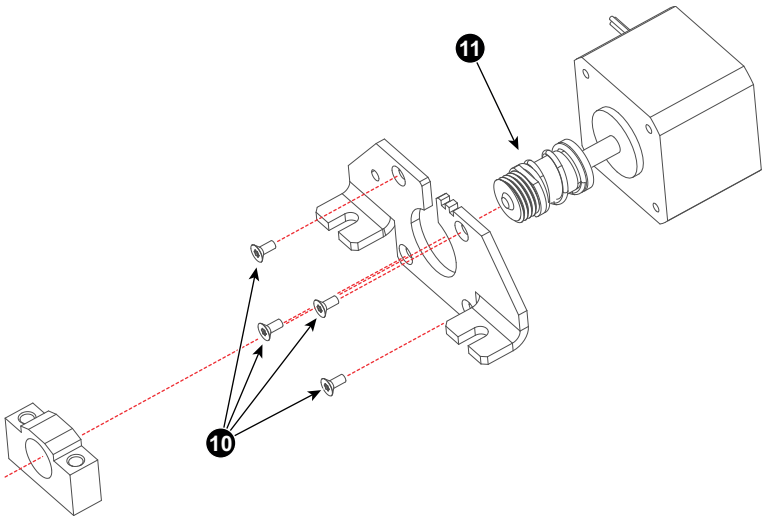


Image 13–54

8. Reinstall the stepper motor on the assembly as illustrated in Image 13–53. Fasten the four screws (reference 9) with a 3 mm Allen wrench.
9. Reinstall the front plate from the Lens Holder. Use a 13mm open end wrench to fasten the four big nuts (reference 7 Image 13–52).
10. Reinstall the inner Lens Holder assembly in the Lens Holder housing by fasten the four nuts and four screws (reference 7 and 5 Image 13–51). Use a 10mm open end wrench and a 5mm Allen wrench.
11. Reconnect the wire units of the Vertical stepper motor (reference 3 Image 13–50) and of the Horizontal stepper motor (reference 4 Image 13–50) .
12. Use a cable tie (reference 2 ) to fasten the wire unit of the socket on the Lens Holder front plate as illustrated in Image 13–49.
13. Reconnect the Ground wire (reference 1 Image 13–49) from the Lens Holder housing. Use a 3mm Allen wrench to fasten the screw. Note that two Ground wires have to be connected together with one screw.

Proceed with reinstalling the Lens Holder. See procedure “Installation of the Lens Holder”, page 332.

The Lens Holder has to be adjusted after installation. See procedure “Scheimpflug adjustment”, page 322.

# 13.15 Replacement of the Focus stepper motor

## Required tools

- 3mm Allen wrench.
- 2.5mm Allen wrench.
- 10mm open end wrench.

## How to replace the Focus stepper motor of the Lens Holder?

1. Disconnect the wire unit (reference 1) from the Focus stepper motor.

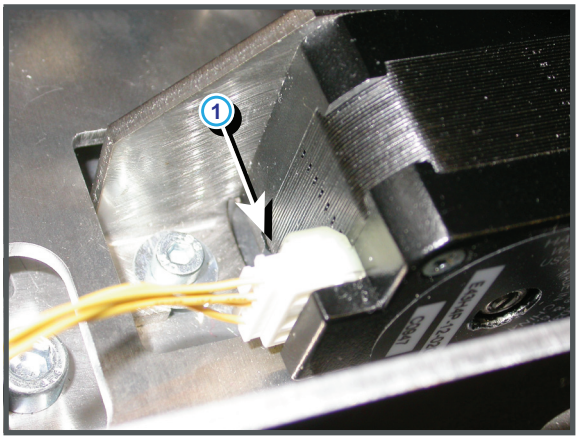


Image 13–55

2. Remove the Focus stepper motor from the assembly by loosing the four screws (reference 2) as indicated. Use a 3mm Allen wrench.

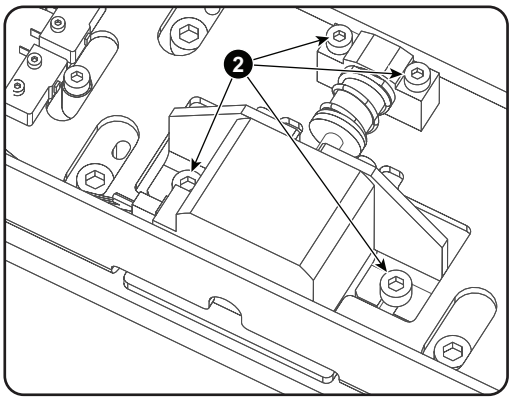


Image 13–56

3. Remove bracket and other parts from the old stepper motor and install these parts on the new stepper motor as illustrated. Use a 2.5mm Allen key for the four screws (reference 10) and a 10mm open end wrench.

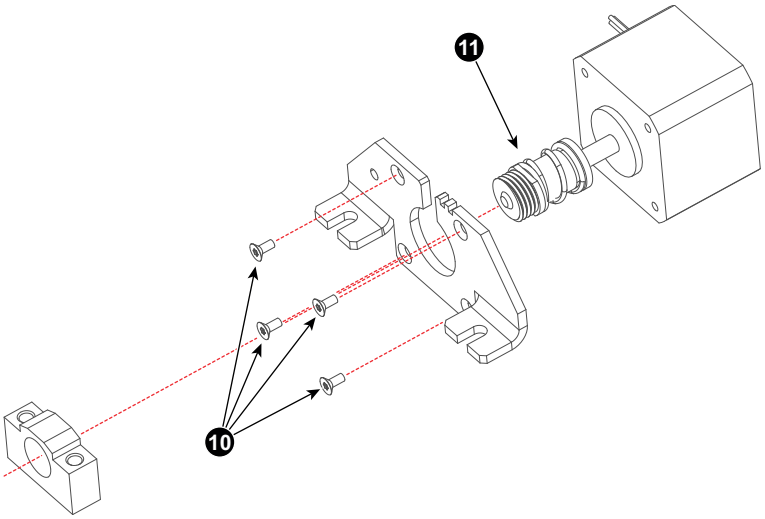


Image 13–57

4. Reinstall the stepper motor on the assembly as illustrated in Image 13–56. Fasten the four screws (reference 2) with a 3 mm Allen wrench.
5. Reconnect the wire unit of the Focus stepper motor (reference 1 Image 13–55).

The Lens Holder has to be adjusted after installation. See procedure “Scheimpflug adjustment”, page 322.

# 13.16 Replacement of the Focus stepper motor Driver board

## Required tools

- 3mm Allen wrench.
- 5.5mm open end wrench.

## How to replace the Driver board of Focus stepper motor?

1. Remove the cover plate of the Driver board by loosening the four screws (reference 1 Image 13–58). Use a 3mm Allen wrench.
2. Disconnect the wire unit (reference 2 Image 13–58) from the Driver board.
3. Remove the Driver board by loosening the four spacers (reference 3 Image 13–58). Use a 5.5mm open end wrench.
4. Install the new Driver board.
5. Reconnect the wire unit.
6. Reinstall the cover plate.

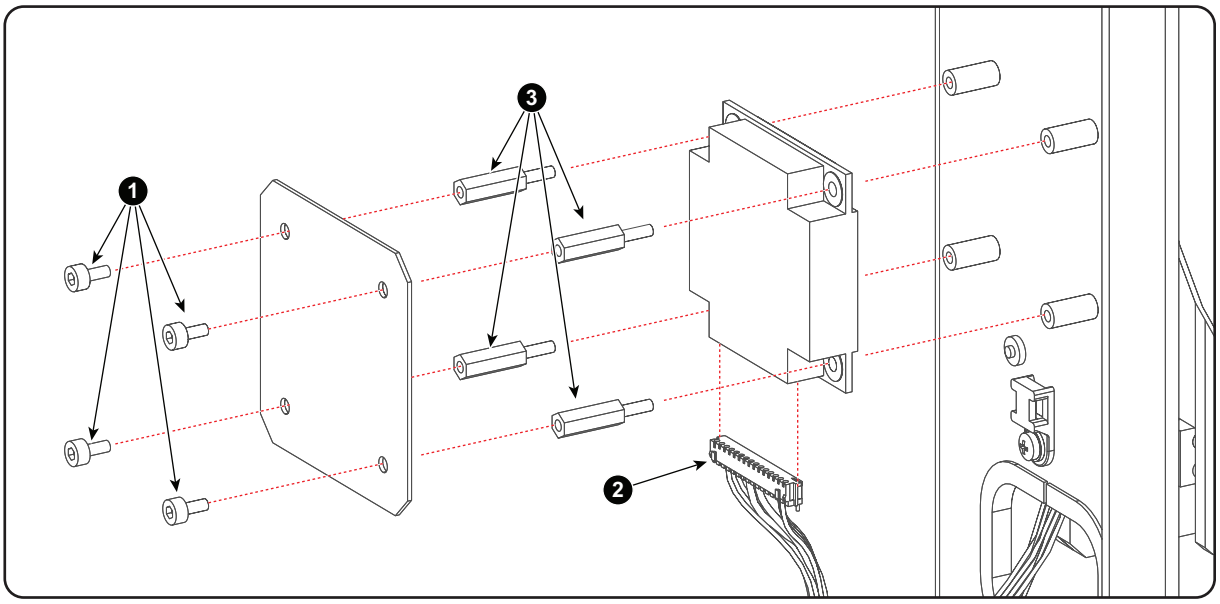


Image 13–58

# 13.17 First Placement of the Inner Dust Rubber

This procedure assumes that the Lens Holder is removed from the projector.

**CAUTION:** During the installation of the dust rubber, the position of the seal plate (reference 3 Image 13–60) and the inner dust rubber (reference 5 Image 13–60) is important.
If the seal plate is installed incorrectly, the projected image from the projector will be off-key.
If the inner dust rubber is installed incorrectly, you will risk tearing the rubber.

## The Dust Rubber Kit

The Lens Holder Inner Dust Rubber kit is an improvement kit designed by Barco and fits perfectly on the Lens Holder of the DP2K and DP4K B series projectors. the Inner Dust Rubber helps prevent dust from entering via the Lens Holder.

While the most recent versions of the DP2K and DP4K B series will have the Inner Dust Rubber pre-installed, older versions may not yet have this dust rubber installed.

## Required tools

- 13 mm nut driver or open-end wrench
- 4 mm Allen wrench

## Required parts

- New front frame metal plate
- Dust rubber holder
- Inner dust rubber

## How to place the Inner Dust Rubber for the first time

1. Remove the old front frame metal plate (reference 2 Image 13–59). Use a 4 mm Allen wrench to remove the four hexagon socket head cap screws (reference 1) on the front frame. After the screws are removed, you can remove the old metal plate. By doing this, you will also release the seal plate (reference 3).

   *Tip:* Remember the position of the seal plate. It will have to be mounted back in the same position on the same place. If done incorrectly, the projected image will be off-key.

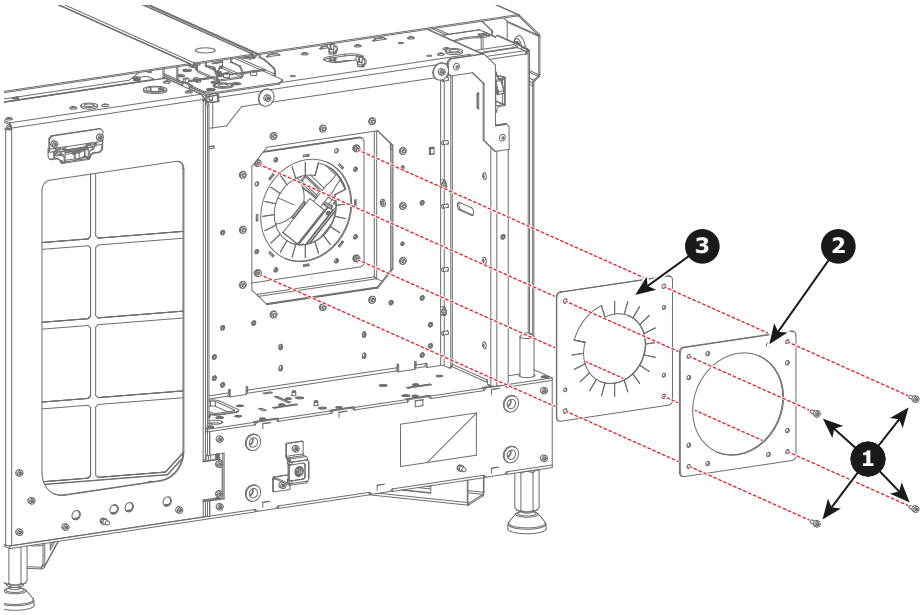


Image 13–59

2. Carefully pull the new front frame metal plate (reference 5 Image 13–60) over the inner dust rubber (reference 4) and make sure the studs on the rubber fit into the sleeves on the metal plate.

3. Place the seal plate (reference 3) back in its original position onto the front frame. Place the dust rubber with metal plate on top of it and tighten it all up with the four hexagon socket head cap screws (reference 1).

   *Caution:* Ensure that the lids of the inner dust rubber face upwards and downwards, not sideways. If mounted incorrectly, you will not be able to attach the rubber onto the lens holder in a correct fashion and you will risk tearing the rubber.

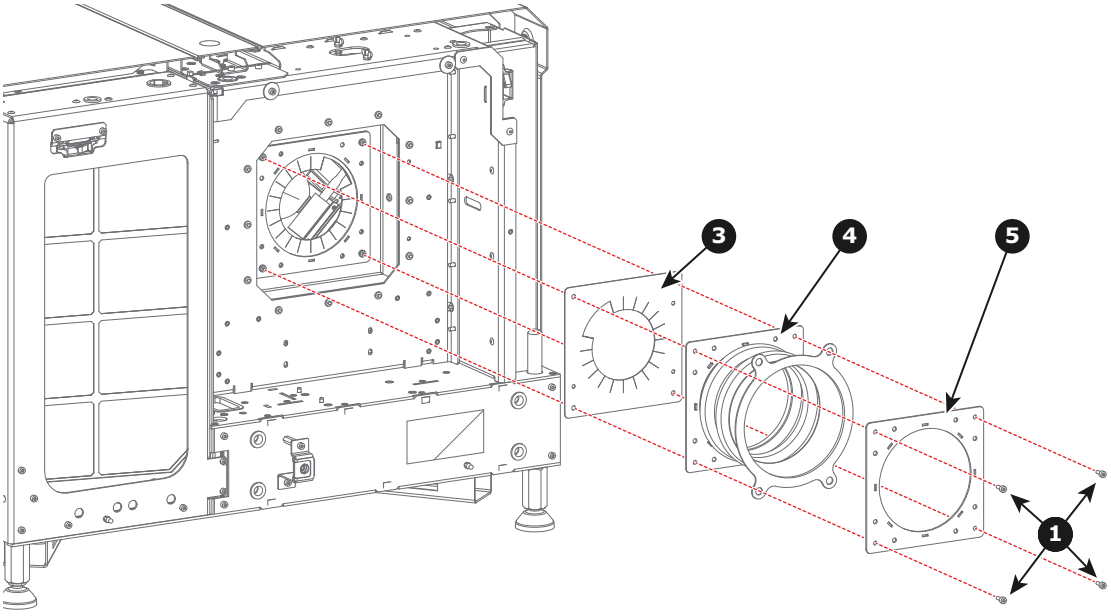


Image 13–60

4. Install the Lens Holder, as described in “Installation of the Lens Holder”, page 332.

5. Remove the front plate from the Lens Holder. Use a 13 mm nut driver to loosen and remove the four Scheimpflug nuts (reference 7 Image 13–61) as illustrated.

   *Caution:* Do not loose the three large springs of the Scheimpflug adjustment mechanism.

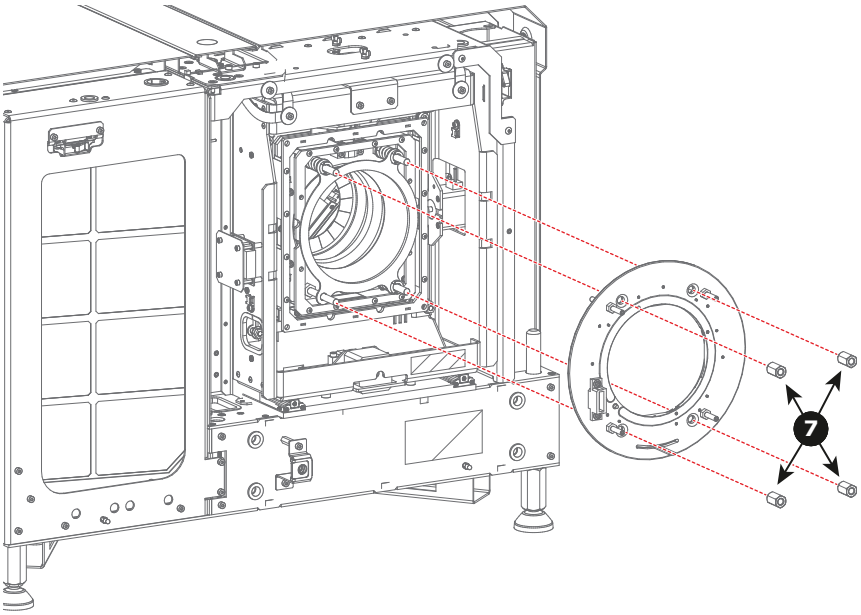


Image 13–61

6. Place the Dust Rubber holder (reference 8 Image 13–62) onto the adjustment mechanism of the Scheimpflug nuts.

7. Carefully place the lids of the inner dust rubber over each side of the adjustment mechanism (reference 9).

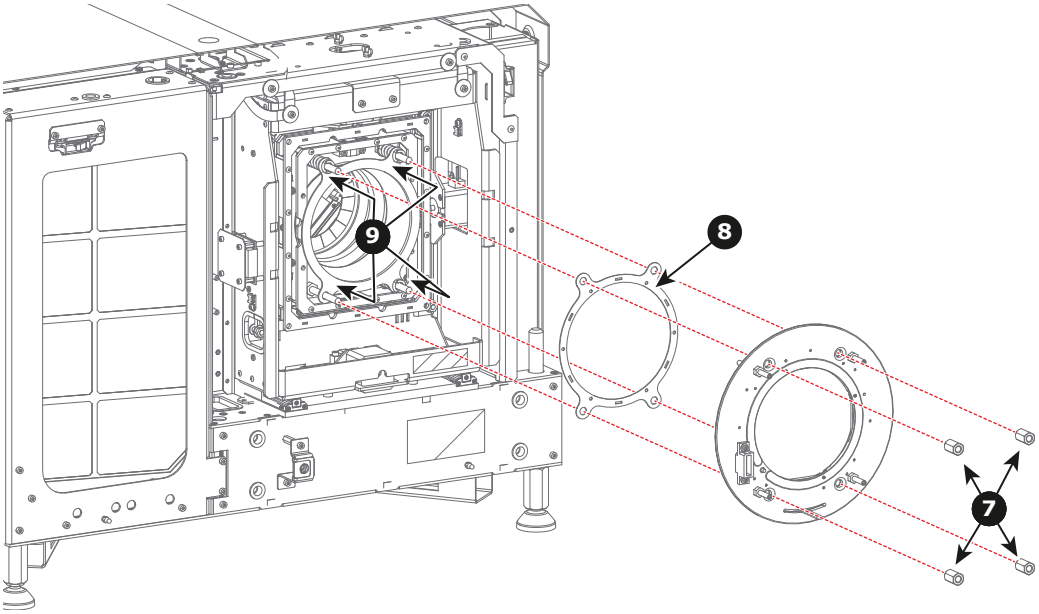


Image 13–62

8. Carefully reinstall the front plate from the Lens Holder. Use a 13 mm nut driver to fasten the four big nuts (reference 7). Fasten the big nuts crosswise bit by bit. Ensure that the upper two rods and the lower left rod contain a big spring.

The Lens Holder has to be adjusted after installation. See procedure “Scheimpflug adjustment”, page 322.

# 13.18 Replacement of the Inner Dust Rubber

**CAUTION:** Be careful as not to damage the inner dust rubber while executing this procedure.

## Required tools

- 13 mm nut driver or open-end wrench
- 4 mm Allen wrench

## Required parts

- New front frame metal plate
- Dust rubber holder
- Inner dust rubber

## How to replace the old Inner Dust Rubber

1. Remove the front plate from the Lens Holder. Use a 13 mm nut driver to loosen and remove the four Scheimpflug nuts (reference 7 Image 13–63) as illustrated.

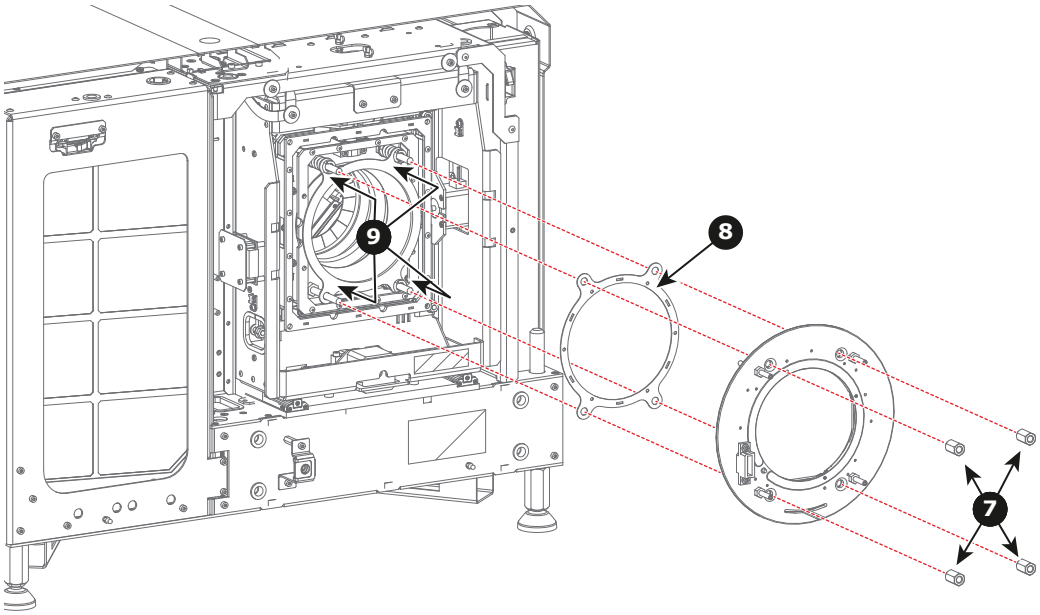


Image 13–63

2. Remove the lids of the old inner dust rubber (reference 9) from the adjustment mechanism. Push the rubber and lids inwards, so that it doesn't get stuck on the lens holder.
3. Check the status of the Dust Rubber Holder (reference 8). If it is still in a good condition, you can leave it in its position. If not, remove it.
4. Remove the Lens Holder, as described in “Removal of the Lens Holder”, page 329.
5. Remove the front frame metal plate (reference 5) and old inner dust rubber . Use a 4 mm Allen wrench to remove the four hexagon socket head cap screws (reference 1) on the front frame. After the screws are removed, you can remove the metal plate and inner dust rubber. By doing this, you will also release the seal plate (reference 3).

   *Tip:* Remember the position of the seal plate. It will have to be mounted back in the same position on the same place. If done incorrectly, the projected image will be off-key.

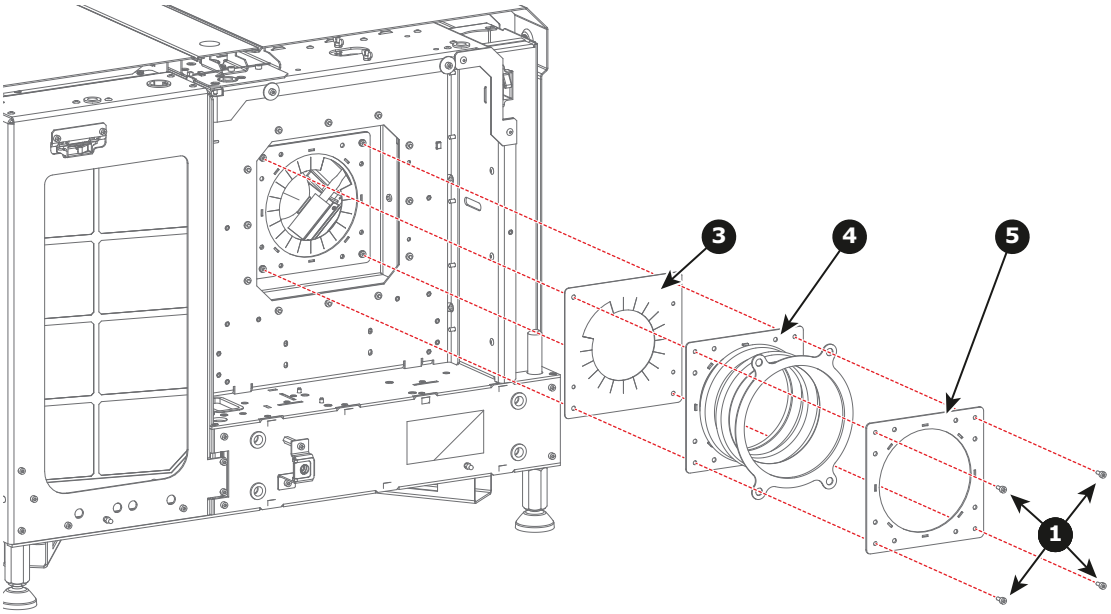


Image 13–64

6. Carefully pull the front frame metal plate (reference 5) over the new inner dust rubber (reference 4) and make sure the studs on the rubber fit into the sleeves on the metal plate.
7. Place the seal plate (reference 3), inner dust rubber and metal frame back in its original position onto the front frame. Tighten it all up with the four hexagon socket head cap screws (reference 1).
8. Install the Lens Holder, as described in “Installation of the Lens Holder”, page 332.
9. Carefully place the lids of the inner dust rubber over each side of the adjustment mechanism (reference 9).

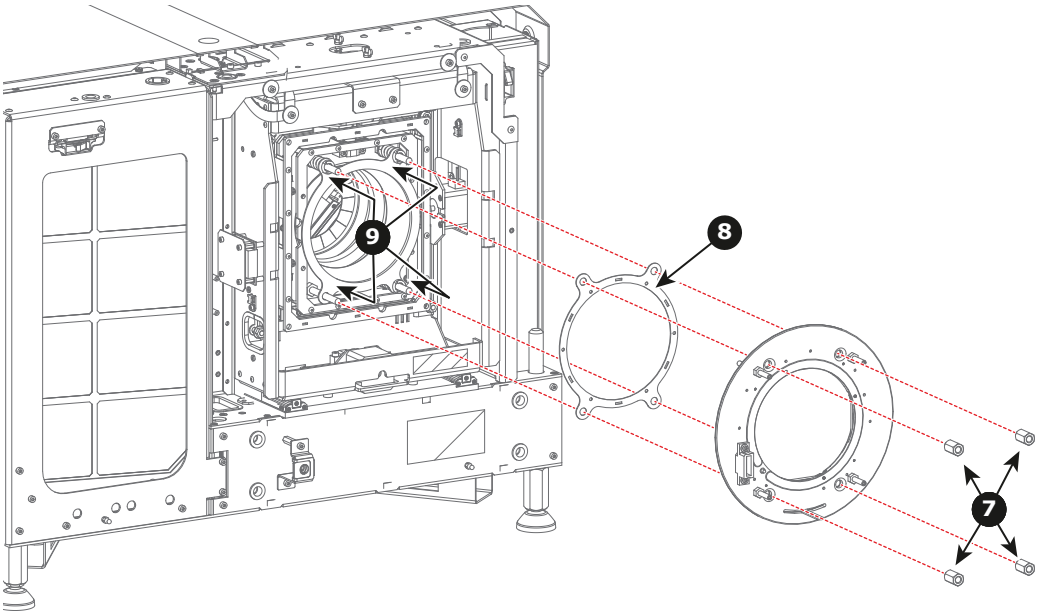


Image 13–65

10. Carefully reinstall the front plate from the Lens Holder. Use a 13 mm nut driver to fasten the four big nuts (reference 7). Fasten the big nuts crosswise bit by bit. Ensure that the upper two rods and the lower left rod contain a big spring.

The Lens Holder has to be adjusted after installation. See procedure “Scheimpflug adjustment”, page 322.

# 14 Card Cage


14.1 Introduction ..... 350
14.2 Fan controller board ..... 351
14.3 Integrated Cinema Processor (ICP) ..... 352
14.4 ICP-D (Integrated Cinema Processor – Direct) ..... 353
14.5 HD-SDI board + link decryptor ..... 355
14.6 Quad 3G/SDI input board ..... 356
14.7 Cinema controller board ..... 357
14.8 Switch Mode Power Supply (SMPS) ..... 359
14.9 Replacement of a Card Cage board ..... 360
14.10 Replacement of the RTC battery of the ICP board ..... 362
14.11 Battery replacement on the Cinema Controller Board ..... 364
14.12 Replacement of the Link Decryptor ..... 366
14.13 Replacement of the SMPS board ..... 368
14.14 Removal of the Button assembly ..... 370
14.15 Installation of the Button assembly ..... 373
14.16 Replacement of the Button module (first generation Keypad) ..... 376
14.17 Replacement of the Keypad (first generation Keypad) ..... 379
14.18 Replacement of the Keypad assembly (second generation Keypad) ..... 383
14.19 Replacement of the signal back plane ..... 384
14.20 Replacement of the Status Light ..... 397
14.21 Authorization to clear security warning on the projector ..... 398


## About this chapter

This chapter gives a brief introduction of the Card Cage, the different boards inside the Card Cage, and how to access the Card Case and these boards. The diagnostic LEDs of each board are described in this chapter as well. Futhermore, the board replacement procedures are included.

# 14.1 Introduction

## Introduction of the Card Cage

The Card Cage is located at the right side of the projector. The upper compartment of the Card Cage is sealed with a cover. This sealed compartment gives access to the connections between the Signal Backplane and Light Processor. Below this sealed compartment there is the local keypad and below this there are four slots wherein the Fan Control board, the Integrated Cinema Processor board (ICP), the HDSDI board or Quad 3G/SDI board and the Barco Cinema Controller board fits. The lower compartment of the Card Cage has one slot wherein the SMPS board has a board to board connectors with the Card Cage Signal Backplane.

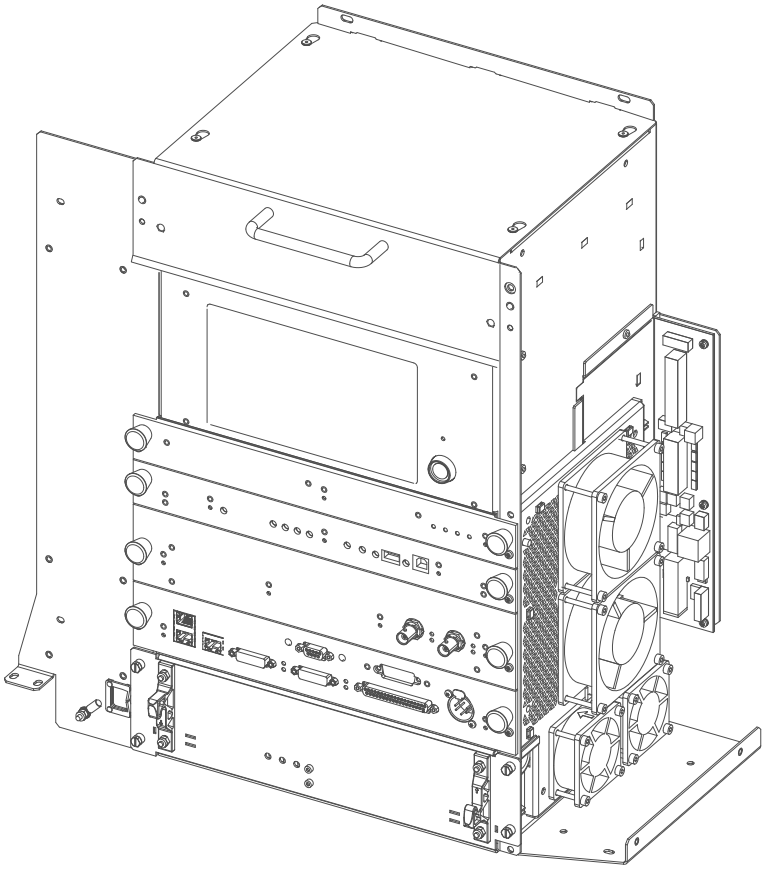

Image 14–1

**CAUTION:** The Card Cage cover may only be removed by qualified service personnel. Opening the Card Cage will result in an authorization request upon startup.

# 14.2 Fan controller board

## Functionalities



Image 14–2 Fan controller board

- Monitors and controls all fans.
- Monitors and controls all voltages provided by the SMPS board.
- Monitors all temperature sensors.
- Controls and monitors the Peltier's on rear of the DMDs.
- Controls the front active cooling.
- Monitors pump speed.
- LEDs on front plate can be used to monitor the output voltages of the SMPS board.
- Drives the dowser (shutter).
- Contains all hardware protections for the projector.
- Controls error line to the LPS and will shut down lamp accordingly.

Conditions included on this board :

- DMD over temperature
- Lamp over temperature
- Lamp cooling down
- Lamp house not connected
- Light processor not connected
- Ambient temperature below 10°.C

# 14.3 Integrated Cinema Processor (ICP)

In case the projector is equipped with an ICMP no ICP board is inserted. All ICP functionality is integrated in the ICMP.

## LEDs and ports on the Integrated Cinema Processor

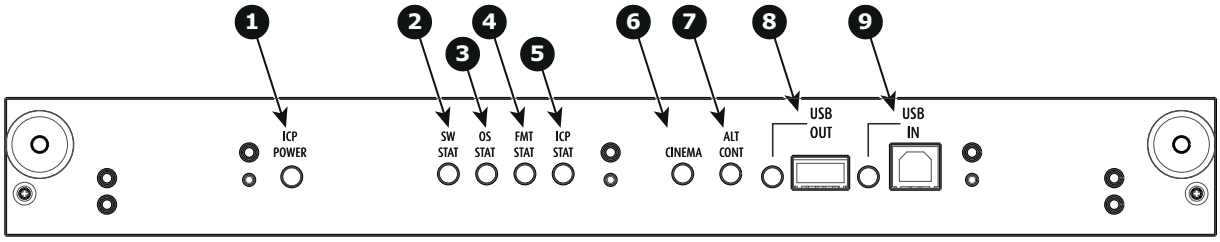


Image 14–3

1 ICP is powered.
2 ICP software state, normal operation is green blinking.
3 ICP operating system state, normally full green .
4 ICP FMT configuration state, normally full green.
5 ICP MAIN configuration state, normally full green.
6 CINEMA port selected. When on, LED 7 will be out.
7 ALTERNATIVE port selection. When on, LED 6 will be out. (note that this function is disabled. Led never lights up)
8 USB, for future use.
9 USB, for future use.

## LED diagnostic

| State description | Normal operation | Error state |
|---|---|---|
| Software state (LED reference 2) | flashing green | red or orange |
| Operating System state (LED reference 3) | green | off, red or yellow |
| FMT FPGA state (LED reference 4) | green | red : unable to configure the FPGA<br>yellow : FPGA is loaded with the Boot application |
| ICP FPGA state (LED reference 5) | green | red : unable to configure the FPGA<br>yellow : FPGA is loaded with the Boot application |

## ICP functions:

- Stores all projector files. When board is replaced; clone package must be reloaded.
- Stores and generates test patterns.
- Scaling to native resolution, re-sizing, masking, line-insertion de-interlacing, subtitle overlay, color space conversion, de-gamma, color correction
- Source Selection between alternative content and cinema content.
- Stores a Certificate and Private Key needed for Playback validation
- Contains a real time clock, which must be synchronized with the GMT/UTC time stored in the link decryptor module or Integrated Media Block (see Communicator software)
- Handles unpacking of special video formats

The ICP board spare part kit is not default programmed for a projector. When using this board in a projector the software must be re-installed after installation of the board.

When installing a new ICP board in a projector the Spatial Color Calibration file must be reloaded and activated.

**CAUTION:** Make sure not to short circuit the battery on the board. That will destroy the board completely !

# 14.4 ICP-D (Integrated Cinema Processor – Direct)

In case the projector is equipped with a Barco ICMP no ICP-D board is inserted. All ICP-D functionality is integrated in the Barco ICMP.

## Introduction

Depending on the projector configuration, the projector card cage is either equipped with an ICP-D or ICMP. In case an ICP-D is installed, then a third-party IMB or IMS can be inserted into the slot below the ICP-D.

## ICP-D functions

- Stores a part of the projector files (screen files, MCGD files, ...).
- Stores the license files related to HDMI inputs.
  Note: the License file related to the use of ICP-D with a third party Integrated Media Block (IMB) is not stored here.
- Stores and generates test patterns.
- Scaling to native resolution, re-sizing, masking, line-insertion de-interlacing, color space conversion, de-gamma, color correction.
- Source Selection between alternative content and cinema content.
- Contains a real time clock, which must be synchronized with the GMT/UTC time stored in Integrated Media Block.
- Handles unpacking of special video formats.

## License

On Series 4 projectors, a license based on the projector serial number and the brand of the IMB is needed. This means a new license is required in case you change projector or IMB brand.

On Series 2 projectors, no license is needed in order to use ICP-D together with an third party IMB.

Supported IMBs from ICP-D software version 1.2.0.5 (included in the Series 4 software 1.4.0) onwards:

- Dolby ShowVault/IMB: From software version 2.8.25 onward
- Dolby IMS3000: From software version 3.3.26 onward
- Dolby IMS2000: From software version 2.8.25 onward
- GDC SX4000: From software version 10.00 (build 103) onward
- GDC SR1000: From software version 17.20 (build 201) onward
- QSC CMS-5000: From software version 1.1.01818+ onward
- Qube Xi: From software version 3.0.1.40 onward
- CMC CineCloud: From software version 1.2.2 onward (Series 2 only)

On series 2 projectors, starting from ICP-D software version 1.2.0.10, HD-SDI + Enigma as well as Quad 3G/SDI + Enigma are now supported. All media server that connect to the HD-SDI + Enigma board and that don't require CineCanvas are now supported.

This list is subject to change. Please contact Barco service to obtain the updated list of supported IMB brands (models, minimum software version, etc).

Contact the supplier of your IMB to acquire a valid license.

## Grace period

Series 4 projectors equipped with an ICP-D are delivered from the factory with a grace period of 200 hours. This means that the projector can be used (in "On" mode) with a third party IMB for 200hrs. During this period the projector trigger a *Warning* (orange notification) with the time remaining in the description. The projector will go into *Error* status (red notification) if no valid license is installed within the specified timeframe. In this case the media server can no longer be selected.

## LEDs and inputs on the ICP-D

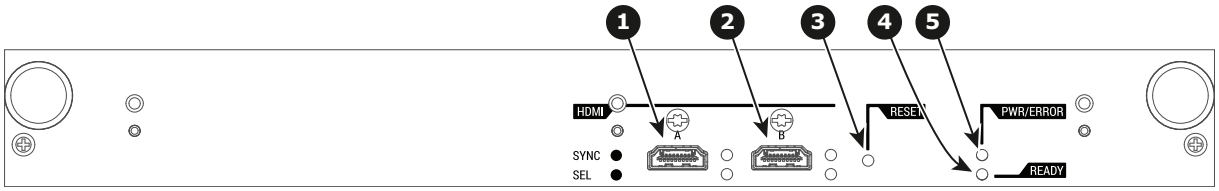


Image 14–4

1 HDMI Input A
2 HDMI Input B
3 Reset button
4 Ready LED
5 Power & Error LED

For the specifications on the HDMI ports, please refer to the appendices of the ICP-D installation manual.

## ICP-D LEDs

Status overview PWR/ERROR and READY LEDs:

| PWR/ERROR | READY | ICP-D Status |
|---|---|---|
| Off | Off | Turned off |
| Red | Off | Board reset or security error |
| Blinking Green | Off | Boot loader |
| Blinking Green | Blinking Orange | Operating System start up |
| Blinking Green | Orange | Security Manager - Image Integrity tests |
| Blinking Green | Blinking Yellow | Security Manager - Self Test |
| Green | Blinking Green | Starting Applications |
| Green | Green | Applications started in normal mode |
| Green | Orange | Applications started in degraded mode |
| Blinking Red | Off | Security error |
| Green | Blinking Orange | Update ongoing |
| Orange | Orange | Update done |

When installing a new ICP board in a DP2K and DP4K B series projector the Spatial Color Calibration file must be reloaded and activated.

**CAUTION:** Make sure not to short circuit the battery on the board. That will destroy the board completely !

# 14.5 HD-SDI board + link decryptor

## Functionality

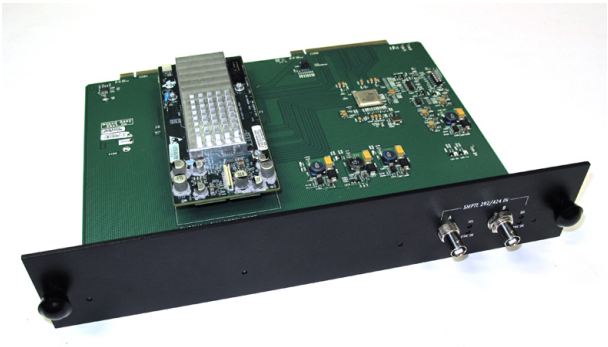

Image 14–5 HD-SDI + Link Decryptor

- Converts all HD/SDI video formats to ICP compliant pixel mapping
- Contains 7 Full-HD test patterns (e.g. Color Bars, H-Ramp, Moiré, ...)
- Decryption of Cinelink-2 encrypted content
- Permanent Security monitoring (with battery back-up) : intrusion detection; voltage monitoring; temperature monitoring; security switches; build in self test; ...
- Handles communication with content servers.
- Contains a real time clock (GMT/UTC time); a Certificate and a Private Key
- Battery shelf life: 6 months

## Replace board

To replace the board, follow the procedure as described in *Replacement of a Card Cage board*. Remove the Link decryptor as described in *Replacement of the Link Decryptor*

Place the link decryptor on the new board and insert the assembly in the Card Cage.

# 14.6 Quad 3G/SDI input board

## Functionality




Image 14–6 Quad 3G/SDI input

- Converts all HD/SDI video formats to ICP compliant pixel mapping
- Contains 7 Full-HD test patterns (e.g. Color Bars, H-Ramp, Moiré, ...)
- Decryption of Cinelink-2 encrypted content
- Permanent Security monitoring (with battery back-up) : intrusion detection; voltage monitoring; temperature monitoring; security switches; build in self test; ...
- Handles communication with content servers.
- Contains a real time clock (GMT/UTC time); a Certificate and a Private Key
- Battery shelf life: 6 months
- Split screen functionality

## Replace board

To replace the board, follow the procedure as described in *Replacement of a Card Cage board*. Remove the Link decryptor as described in *Replacement of the Link Decryptor*

Place the link decryptor on the new board and insert the assembly in the Card Cage.

# 14.7 Cinema controller board

## Functionality



Image 14–7 Cinema controller board

- Ethernet Communication to ICP, Media block or Link decryptor.
- Two DVI ports (with HDCP) for alternative content.
- RS232 port to BARCO Controller.
- Standardized 3D interface on board.
- GPIO controls
- Peripheral Port
- Lensholder motors (stepper motors)
- Stores lens files and lens type / Controls lens
- Lens motor drivers (DC motors)
- Stores Dallas key
- Controls lamp power supply
- Stores SNMP key
- Stores Barco IP address and host name
- Handles reporting of errors, version info & Barco logs to Communicator
- Controls ICP board
- Controls Dolby 3D color wheel
- Controls and monitors keypad
- Controls and monitors status lights
- Stores Macro, Input, Lens file, 3D file and LSC file.

Prior to replace the Cinema Controller board try to read out the SMNP key. Use for that the Communicator software. In case it is not possible to read out the SNMP key a new SNMP key has to be requested. See chapter “Request for new SNMP key” in the user guide of the Communicator software.

When inserting a new Cinema Controller board the SNMP key must be reprogrammed in the new board and the Dallas key must be re-identified with the new board. See user guide Communicator for precise instructions.

## Ethernet network communication

The DP2K and DP4K projector can be connected to a LAN (local area network) using one of the 10/100/1000 base T ports on the communication interface. Once connected to the LAN, users are capable of accessing the projector from any location, inside or outside (if allowed) their company network using the control software (Communicator touch panel). This toolset locates the projector on the network in case there is a DHCP server or the user can insert the correct IP-address of the projector to access the projector. Once accessed, it is possible to check and manipulate all the projector settings. Remote diagnostics, control and monitoring of the projector can then become a daily and very simple operation. The network connectivity permits to detect potential errors and consequently improve the time to servicing.

As there is a need to daisy chain projectors when they are in Ethernet network, an Ethernet switch is build in, the incoming network is hereby available for the internal PC and for the next device in the chain. In this way a

'star' network interconnection can be avoid. The switch used is a stand alone 10/100Mbit Ethernet switch. This assures no influence on the network speed. Whenever a slow (10Mbit) device is connected the speed between the 100Mbit devices remains 100Mbit.

Both Ethernet ports are equipped with a yellow and a green LED. The yellow LED lights up in case the port is connected with a 100Mbit network. The green LED blinks in case there is network activity.

The connectors used for both Ethernet ports are of the type RJ45, which is compatible with standard RJ45 cable connector. Straight (most common) as well as cross linked network cables can be used. The 2 ports are functionally identical. Both ports are connected via the projector hub (Auto sensing enabled).

## RS232 serial communication

The communication interface of the DP2K and DP4K supports RS232 serial communication. You can use the RS232 input port to connect a local PC to your DP2K and DP4K projector. This way you can configure and control your DP2K and DP4K projector from your local PC.

Do not forget to set the projector's baud rate (default = 115200) to match that of the computer.

Advantages of using RS232 serial communication:

- easy adjustment of the projector via PC (or MAC).
- wide range of control possibilities.
- address range from 0 to 255.
- sending data to the projector (update).
- copying data from the projector (backup).

**RS232**
An Electronic Industries Association (EIA) serial digital interface standard specifying the characteristics of the communication path between two devices using either D-SUB 9 pins or D-SUB 25 pins connectors. This standard is used for relatively short-range communications and does not specify balanced control lines. RS-232 is a serial control standard with a set number of conductors, data rate, word length and type of connector to be used. The standard specifies component connection standards with regard to computer interface. It is also called RS-232-C, which is the third version of the RS-232 standard, and is functionally identical to the CCITT V.24 standard. Logical '0' is > + 3V, Logical '1' is < - 3V. The range between -3V and +3V is the transition zone.

## GENERAL PURPOSE IN/OUT (GPIO)

This female 37 pins D-SUB connector can be used to send or receive trigger signals from other devices. These input/output pins can be programmed by macros created via the Communicator touch panel. See user's guide of the Touch panel, section Macro editor, for more information about this functionality.

# 14.8 Switch Mode Power Supply (SMPS)

## Diagnostic LEDs

Note that the projector input cover must be removed to see the LEDs.

| | |
|---|---|
| +12V | Indicates that the supply voltage of +12 volt is present for the electronics. |
| + VTEC | Indicates that the voltage to drive the Peltier elements (TEC), which are mounted on the Light Processor unit, is present |
| +24V | Indicates that the supply voltage +24 volt is present. |




Image 14–8

# 14.9 Replacement of a Card Cage board

## About the procedure

This procedure can be used to replace one of the following boards:

- Fan Controller board
- Integrated Cinema Processor board (ICP)
- HDSDI board (includes Link Decryptor)
- Quad SG/SDI board (includes Link Decryptor)
- Barco Cinema Controller board

**CAUTION:** Wear a wrist band which is connected to the ground while handling the electrostatic discharge sensitive parts.

Prior to replace the Cinema Controller board try to read out the SMNP key. Use for that the Communicator software. In case it is not possible to read out the SNMP key a new SNMP key has to be requested. See chapter “Request for new SNMP key” in the user guide of the Communicator software.

## Required tools

- Phillips screwdriver
- Torx screwdriver T10

## How to replace one of the boards in the Card Cage?

1. Remove the input cover to access the fixation screws of the board(s).
2. Turn out both fixation screws (reference 1 Image 14–9).[4]

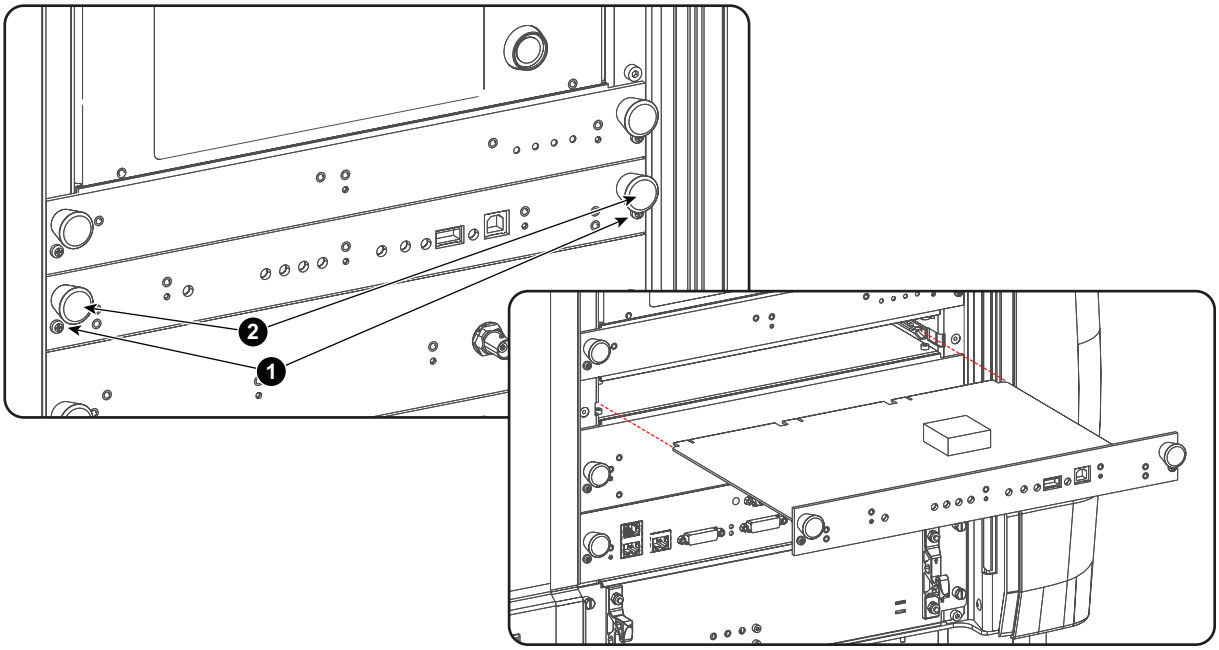


Image 14–9

3. Take the board by both handles (reference 2 Image 14–9) and pull it out.

   All connections are made via the board to board connection with the back plane.
4. Slide the new board into both groves.

4. Depending on the production date, the fixation screws can be either Phillips screws or Torx screws.

5. Push on both handles (reference 2 Image 14–9) until the board is fully inserted and the connection is made with the back plane.
6. Secure the board by turning in both fixation screws (reference 1 Image 14–9).[4]

When inserting a new ICP board in the card cage, the ICP software must be reinstalled. See user guide Communicator for instructions.

When inserting a new ICP or ICMP board in the card cage, the Spatial Color Calibration file has to be uploaded and activated. See chapter “Spatial Color Calibration (LUT-SCC)”, page 273.

When inserting a new Cinema Controller board the SNMP key must be reprogrammed in the new board and the Dallas key must be reidentified with the new board. See user guide Communicator for instructions.

# 14.10 Replacement of the RTC battery of the ICP board

## Required tools

Phillips screw driver

## Required parts

All parts are included in kit R8766526K (battery cover, coin cell battery BR2330 and a pair of gloves).

## How to replace

1. Put on the gloves.
2. Remove the ICP board from the card cage. See chapter “Removing a board in the card cage”.
3. Carefully put the ICP board on a table.
4. Place the battery cover over battery ‘B2’ of the ICP board to protect this battery while replacing the RTC battery ‘B1’ which is seated in the battery holder.

   *Note:* The battery cover can be left on the board.

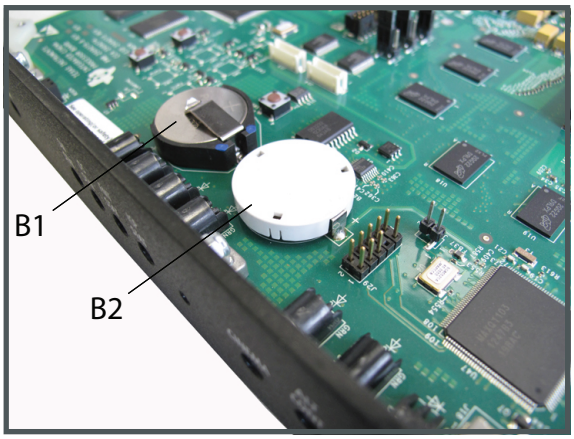


Image 14–10

5. Remove the RTC battery ‘B1’ from the battery holder and insert the new battery in the battery holder.

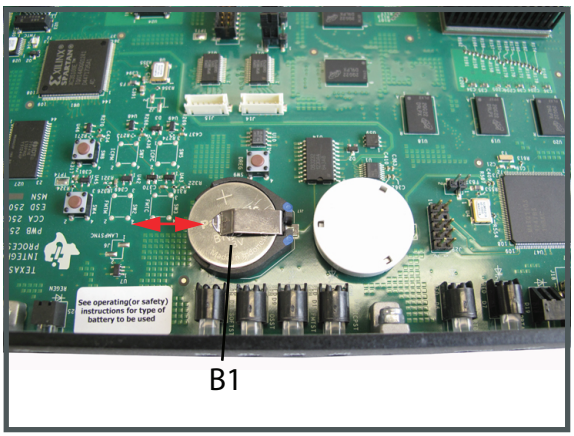


Image 14–11

6. Insert and fixate the ICP board back in the card cage. See chapter “Inserting a board in the card cage”.
7. Power on the projector.

8. Clear the projector error 5800 “ti-icp - system status = fail” with error message “ICP real time clock error” by configuring the RTC (Real Time Clock) of the ICP. See user manual Communicator chapter “Set up of the ICP clock”, choose the option UTC/GMT time calculated from current PC time as current time.

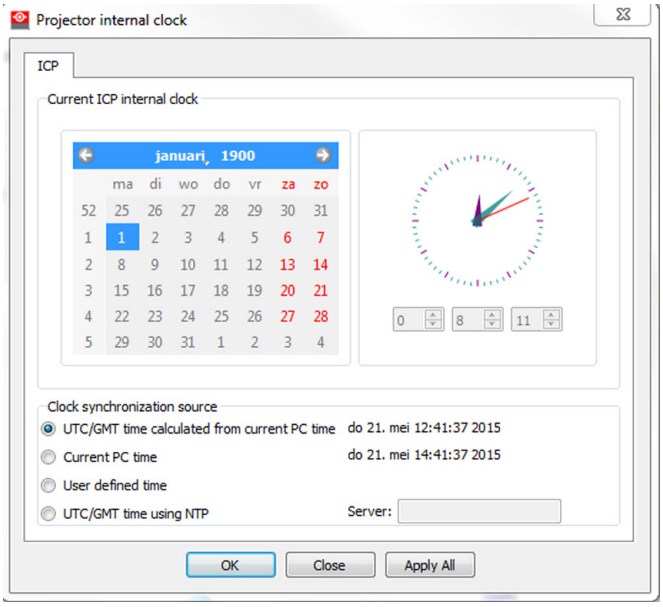


Image 14–12

9. Clear the projector error 5834 “physical marriage tamper event” by remarrying the projector. See service manual chapter "Authorization to clear security warning on the projector".

# 14.11 Battery replacement on the Cinema Controller Board

## About an empty battery

There is no error indication in Communicator when the battery is almost empty. Only when opening the error logging after powering on the projector, you will see that some time stamps in the beginning of the list are missing or that these time stamps are still old timings. That is due to an empty battery on the Cinema Controller Board.

There is no battery kit available. The customer has to buy a new battery himself.
Battery type used : CR1220 (3V, 0.03AH, Li)

## Required tools

PH2 Phillips screwdriver.

## Required parts

Battery CR1220

## How to replace

1. Loosen the two screws (reference 1) at the front of the Cinema Controller.
2. Pull the Cinema Controller out of its compartment.
3. Pull out the empty battery and insert a new CR1220 battery with the flat side of the battery facing to the top.

   *Note:* No battery kit available as spare part. Buy a new one in a dedicated shop.

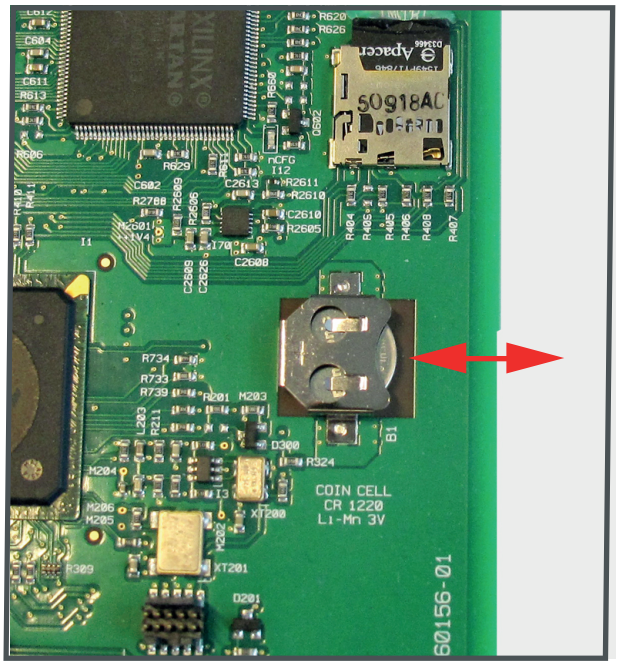


Image 14–13 Battery replacement

4. Gently insert the Cinema Controller in the guides of the Cinema Controller compartment as illustrated. Push it completely in.

   *Caution:* Ensure that the both sides of the Cinema Controller are captured by the guides inside the Cinema Controller compartment, as shown in the detail of the illustration.

5. Fasten the two screws at the front side of the Cinema Controller (reference 1).

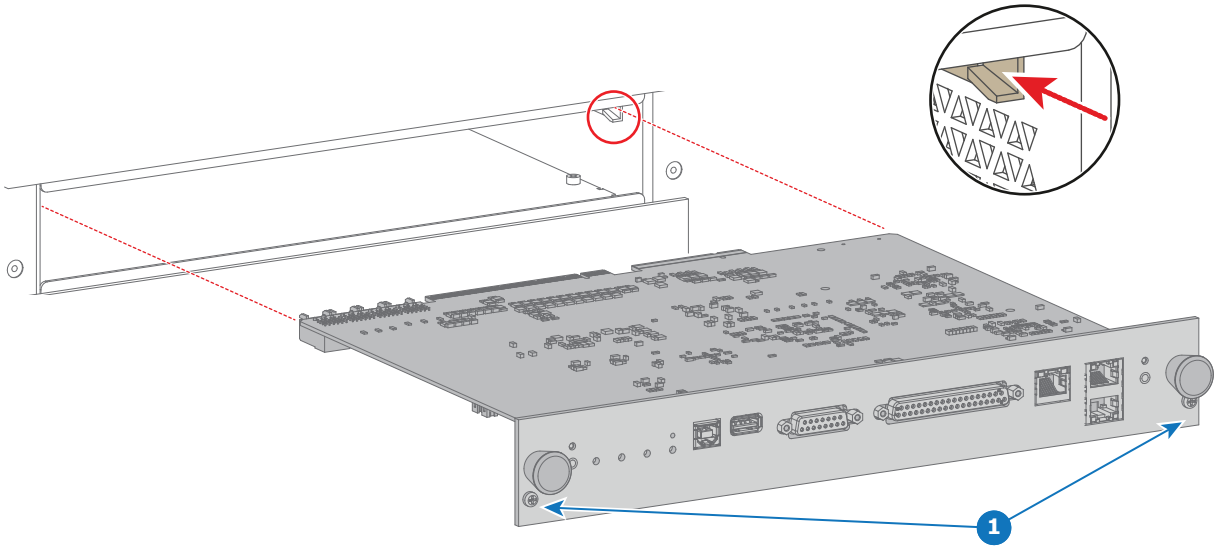


Image 14–14

# 14.12 Replacement of the Link Decryptor

## Location

The Link Decryptor is mounted on the HDSDI board or Quad 3G/SDI board.

## Required tools

T10 Torx screwdriver.

## How to replace the Link Decryptor?

1. Remove the input board in the Card Cage. See “Replacement of a Card Cage board”, page 360.
2. Loosen the 4 screws as illustrated in Image 14–15.

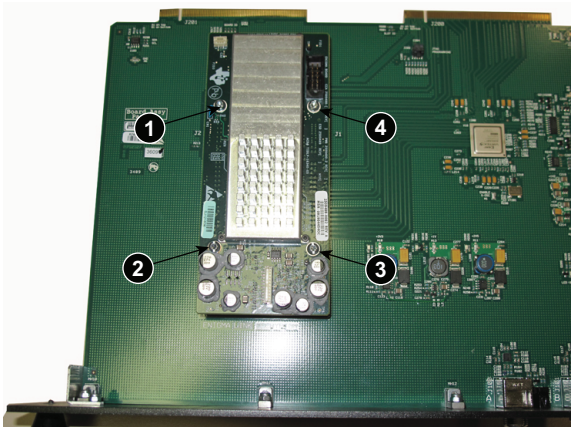


Image 14–15 Link Decryptor fixation

3. Pull off the current mounted Link Decryptor board.
4. Unpack the new Link Decryptor board and plug it in both connectors at the same time (black and white connector on the Link Decryptor must facing the board connectors of the input board.

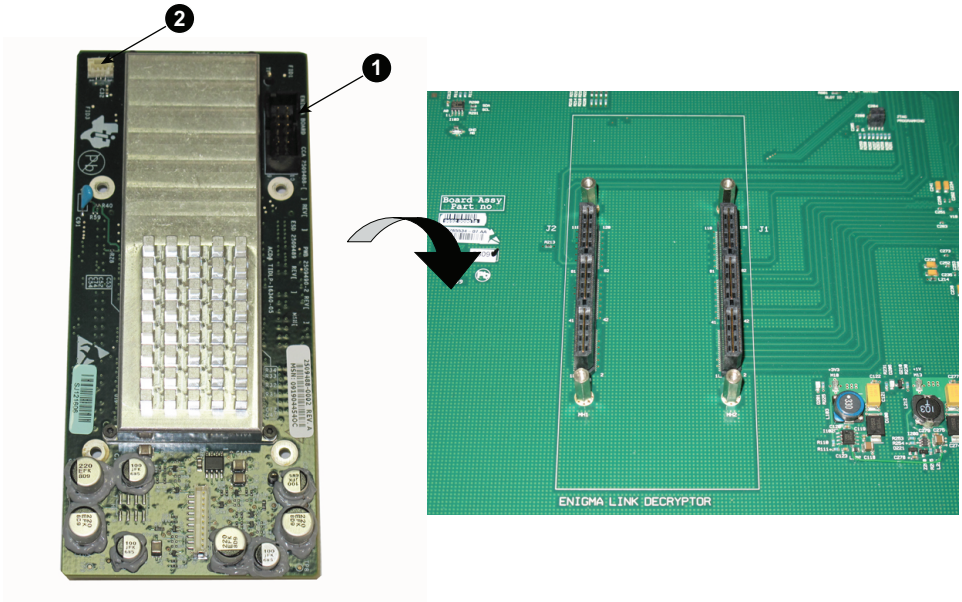


Image 14–16 Link Decryptor, mounting

5. Drive in the 4 fixation screws.
6. Re-install the input board in the Card Cage.

When inserting a new Link Decryptor, the Link Decryptor software must be re-installed. See “Software update via Communicator (DC update companion)”, page 399.

A marriage between the new Link Decryptor and the ICP board must be realized; Follow the procedure to clear a security warning on the projector. See “Authorization to clear security warning on the projector”, page 398.

# 14.13 Replacement of the SMPS board

**WARNING:** Ensure that the projector is switched off and disconnected from the power net prior to remove the cover of the SMPS compartment.

## Required tools

7mm nut driver or flat screw driver.

## How to replace the SMPS board?

1. Release the 4 retaining screws (reference 1 Image 14–17) off the cover of the SMPS compartment .

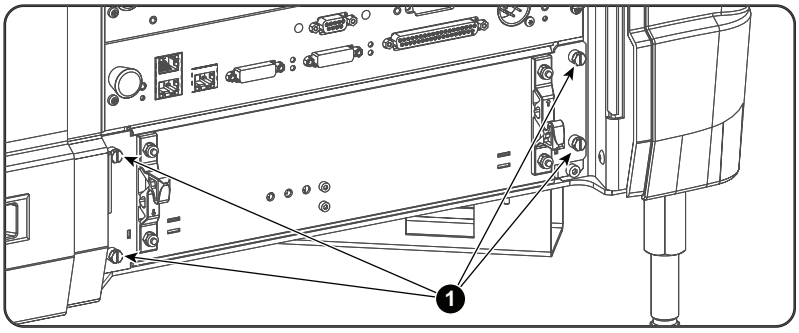


Image 14–17

2. Remove the cover of the SMPS compartment.

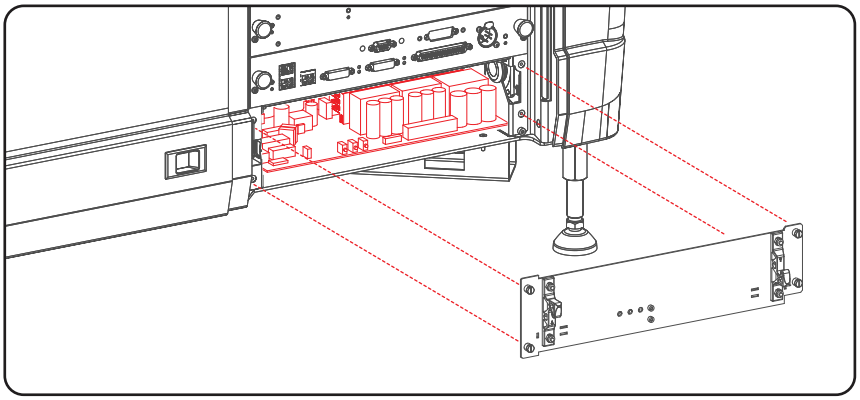

Image 14–18

3. Pull out the SMPS board 3 or 4 centimeters out of its compartment and disconnect the following connectors:
   - Mains input (reference 1 )
   - Ground wire (reference 2)
   - Control connector (blue wires) (reference 3)
   - Power out connector (black wires) (reference 4)

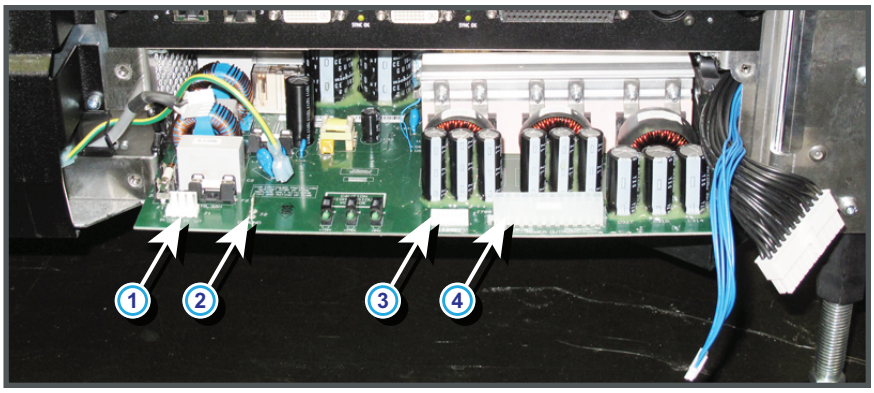


Image 14–19

4. Pull the SMPS board completely out of its compartment.

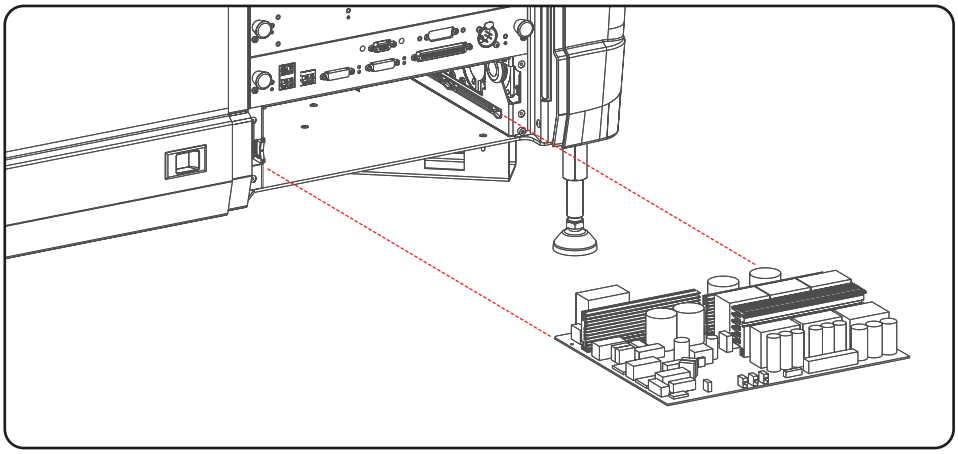

Image 14–20

5. Take a new SMPS unit and insert the board in the guides of the SMPS compartment. Push it completely in.
6. Make the electrical connections:
   - Mains input (reference 1 Image 14–21)
   - Ground wire (reference 2 Image 14–21)
   - Control connector (blue wires) (reference 3 Image 14–21)
   - Power out connector (black wires) (reference 4 Image 14–21)

   ⚠ *Caution:* Support the bottom of the SMPS board while plugging in the wire units.

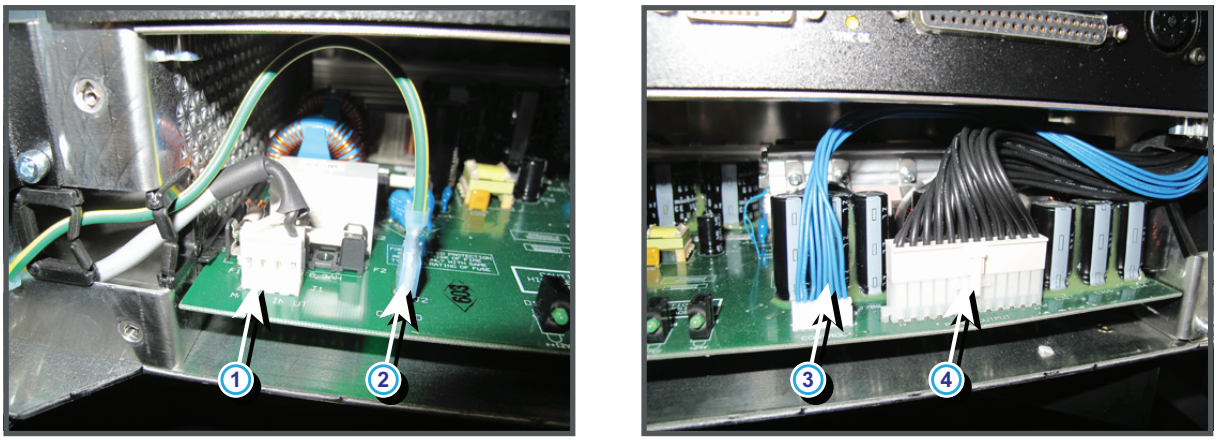


Image 14–21

7. Place the cover on its place and fasten the 4 retaining screws (reference 1 Image 14–17).

# 14.14 Removal of the Button assembly

To remove the Button assembly the projector input cover has to be removed first. This procedure assumes that the input cover is already removed.

## Required tools

- 3mm Allen wrench.
- 2.5mm Allen wrench.
- PH1 Phillips screw driver.

## How to remove the Button assembly from the Card Cage?

1. Loosen the two screws (reference 1 Image 14–22) of the Card Cage top cover. Use a 3mm Allen wrench
2. Remove the Card Cage top cover. Take into account that the top cover is captured by four self clinching tie mounts (reference 2 Image 14–22) .

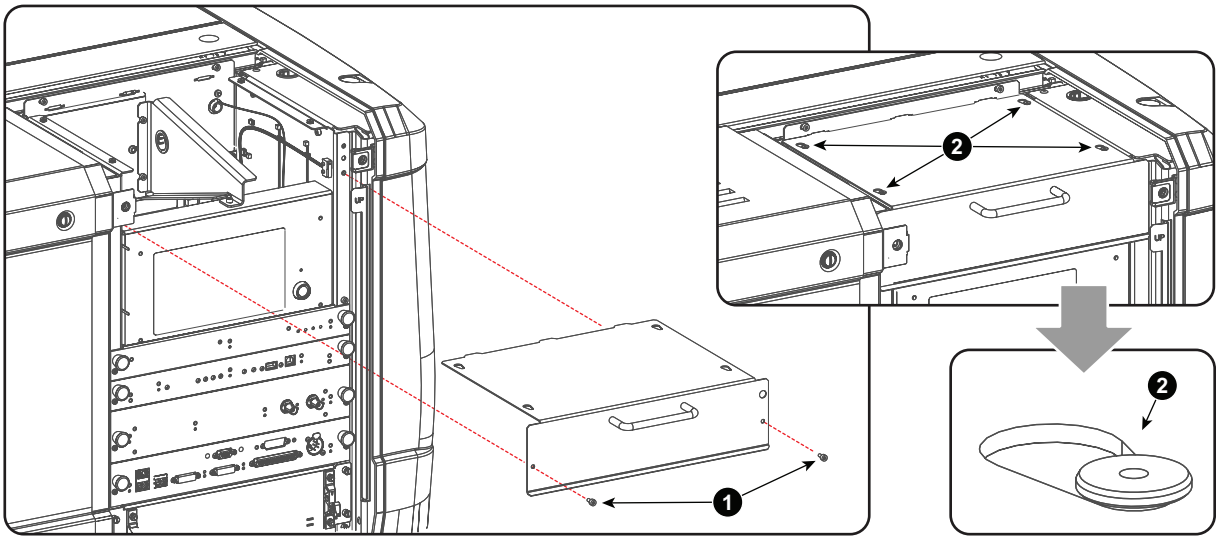


Image 14–22

3. Disconnect the wire unit of the fan which is ventilating the compartment of the Light Processor.
4. Remove the Card Cage top bracket as illustrated. Use a 3 mm Allen wrench to loosen the two screws at the back a few turns (reference 1) and to remove the screw at the front (reference 2).

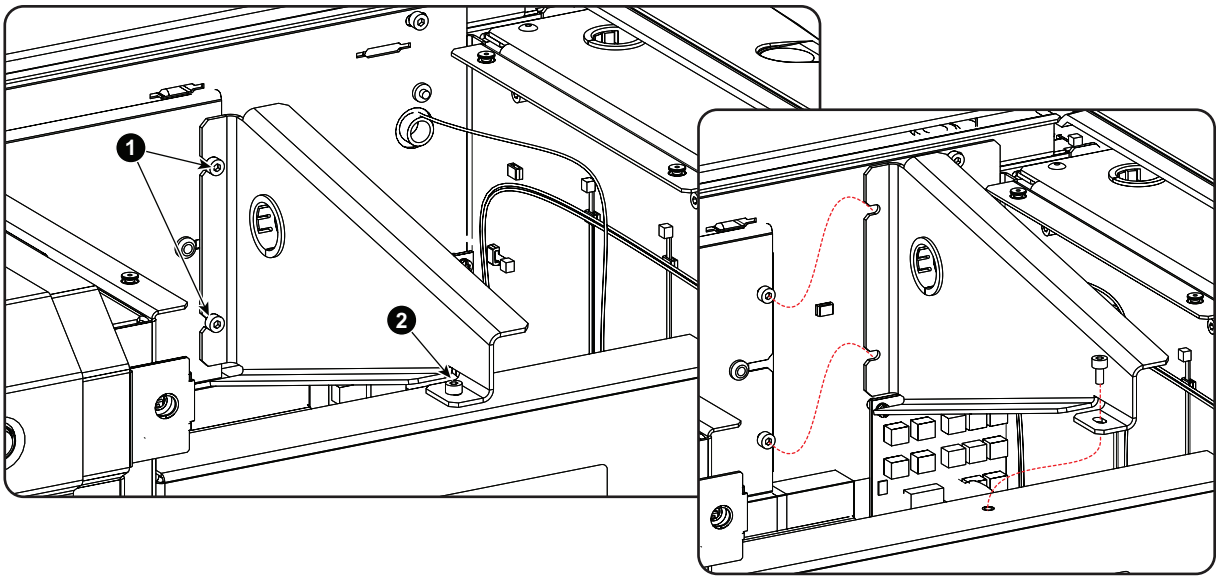


Image 14–23

5. Disconnect the wire unit (reference 1 Image 14–24) from the rear of the button module.

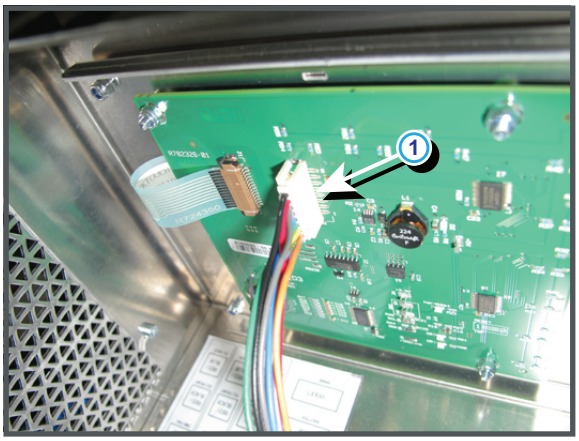


Image 14–24

6. Release all cables from the cable holders (reference 1 Image 14–25) at the bottom of the Button assembly.

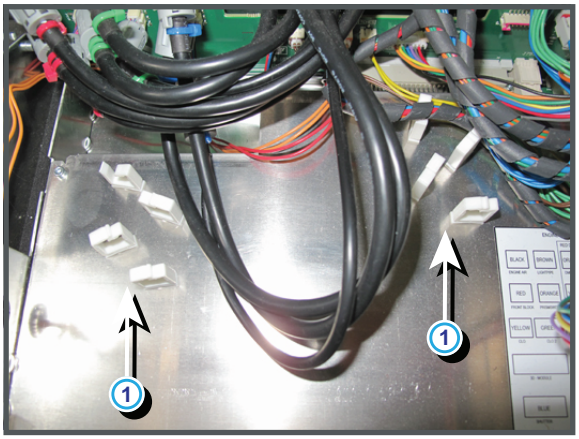


Image 14–25

7. Remove the Fan Control board (FCB) from the Card Cage. See procedure “Replacement of a Card Cage board”, page 360.

8. Loosen the three screws at the inner right (reference 1 Image 14–26) and three the screws at the inner left (reference 2 Image 14–26) of the Button assembly. Use a 3mm Allen wrench to loosen these screws a few turns. No need to remove the screws completely.

9. Slide out the Button assembly from the Card Cage as illustrated.

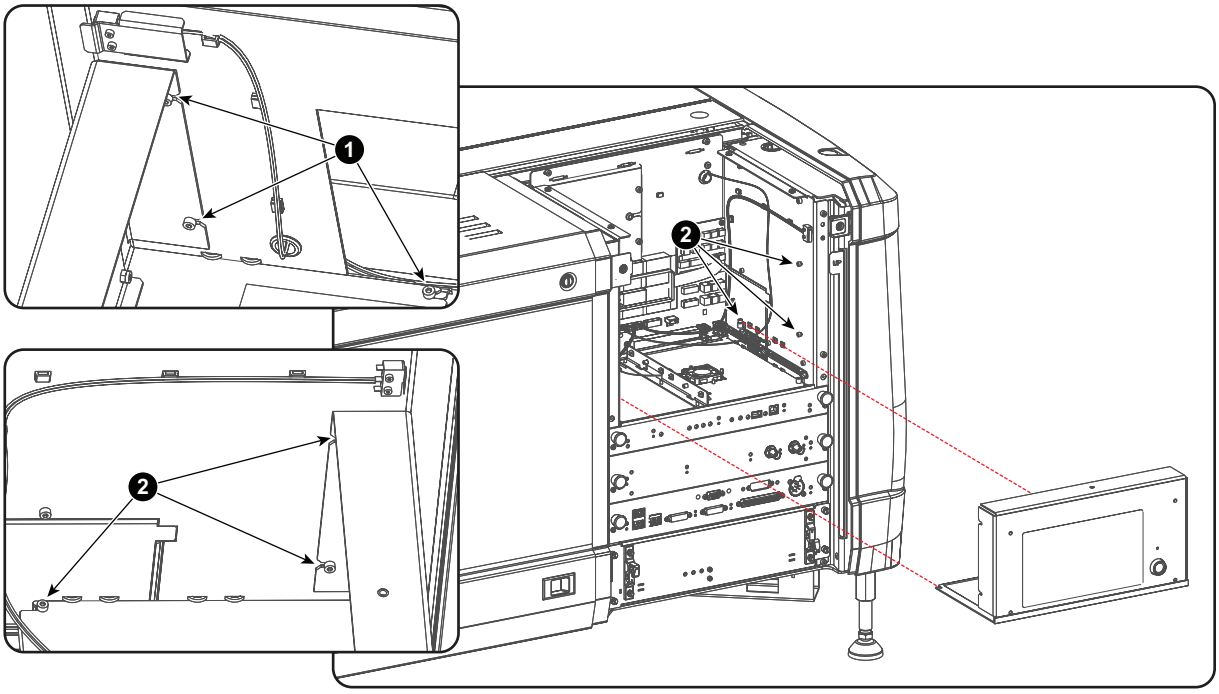


Image 14–26

# 14.15 Installation of the Button assembly

To install the Button assembly the Fan Control board (FCB) may not be inserted in the Card Cage.

## Required tools

- 3mm Allen wrench.
- 2.5mm Allen wrench.
- PH1 Phillips screw driver.

## How to install the Button assembly in the Card Cage?

1. Slide the Button assembly into the Card Cage as illustrated in Image 14–27. Make sure that the bottom plate of the assembly fits into the support grooves at both sides of the card cage.
2. Fasten the three screws at the inner right (reference 1 Image 14–27) and three the screws at the inner left (reference 2 Image 14–27) of the Button assembly. Use a 3mm Allen wrench.

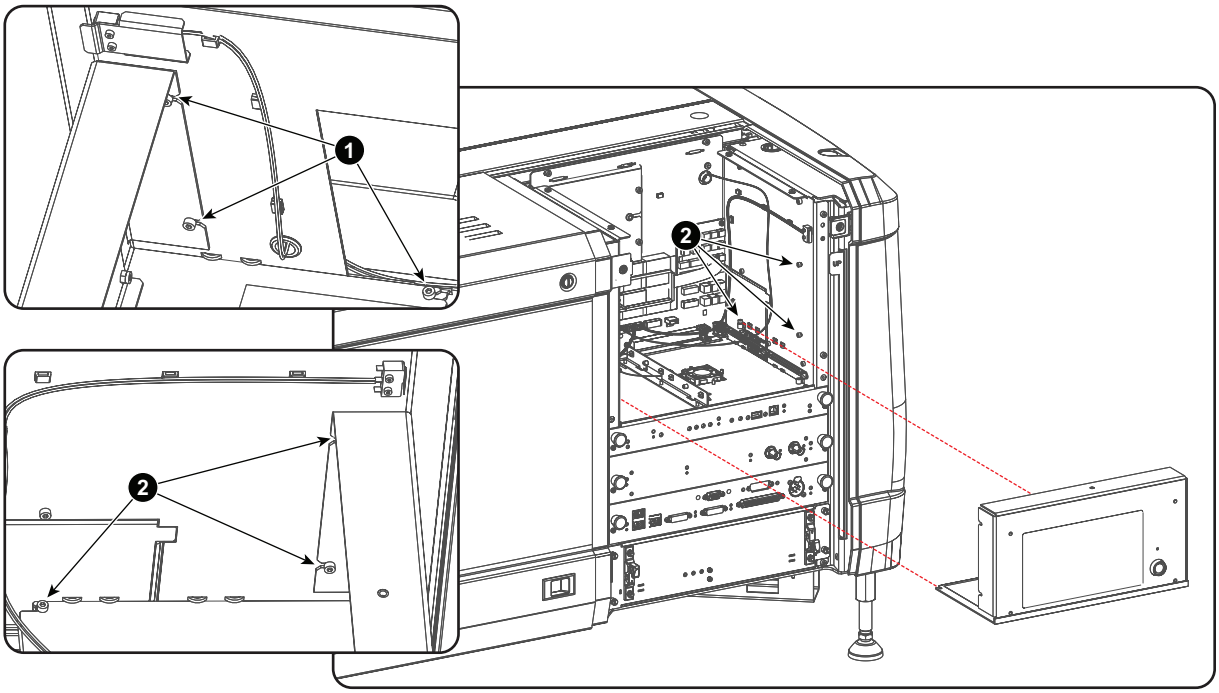


Image 14–27

3. Install the Fan Control board (FCB) in the Card Cage. See procedure “Replacement of a Card Cage board”, page 360.
4. Secure all cables by pushing them in the cable holders (reference 1 Image 14–28) at the bottom of the Button assembly.

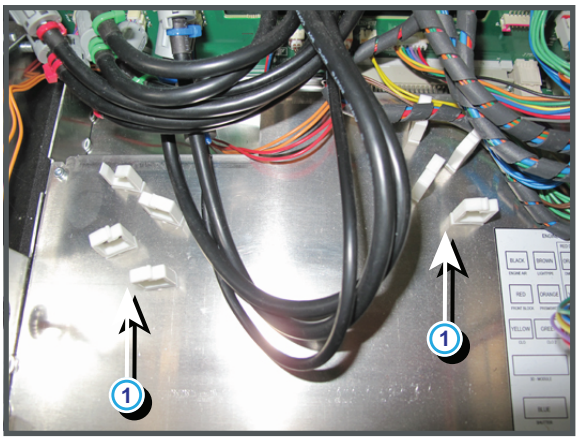


Image 14–28

5. Connect the wire unite (reference 1 Image 14–29) with the rear of the button module.

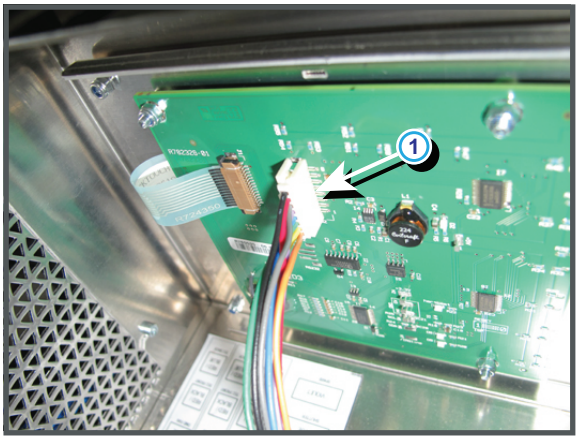


Image 14–29

6. Install the Card Cage top bracket as illustrated. Use a 3 mm Allen wrench to fasten the two screws at the back (reference 1 Image 14–30) and the screw at the front (reference 2 Image 14–30).

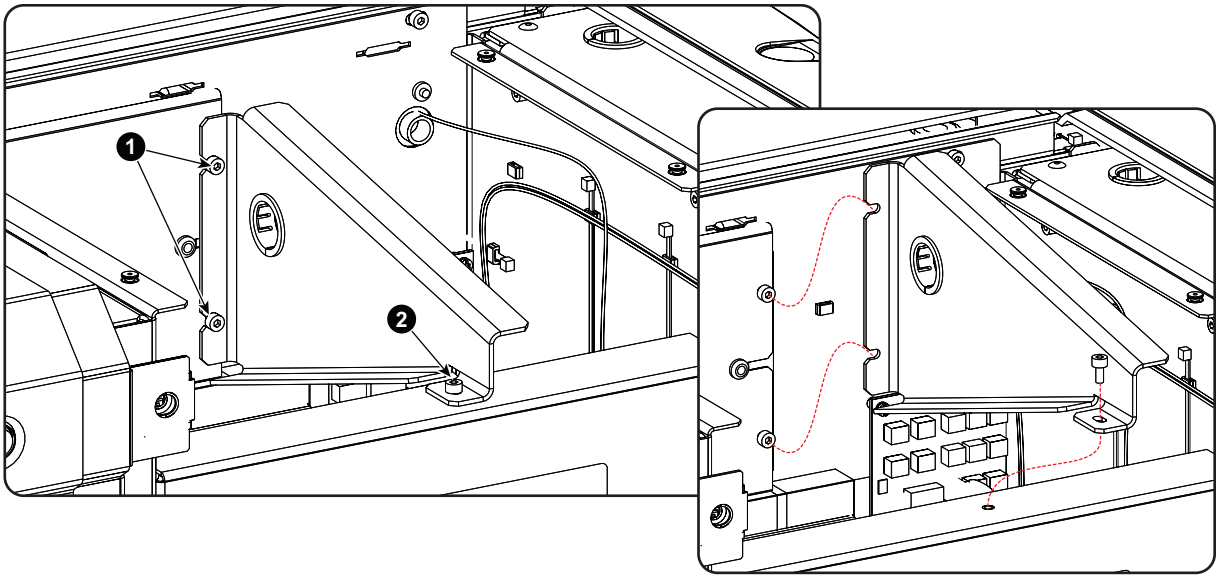


Image 14–30

7. Install the Card Cage top cover. Take into account that the top cover is captured by four self clinching tie mounts (reference 2 Image 14–31) .

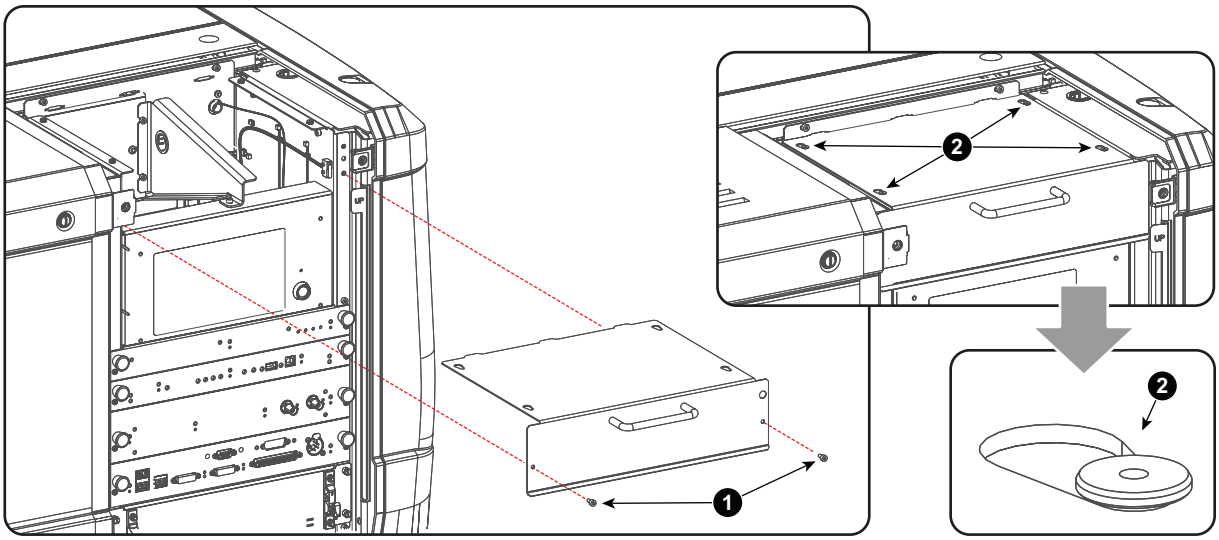


Image 14–31

8. Fasten the two screws (reference 1 Image 14–31) of the Card Cage top cover. Use a 3mm Allen wrench

# 14.16 Replacement of the Button module (first generation Keypad)

This procedure assumes that the Button assembly is already removed from the Card Cage.

## Required tools

5.5 mm nut driver

## How to replace the Button module?

1. Disconnect the flat cable (reference 1, Image 14–32) from the Button module (reference 2, Image 14–32) by performing the following procedure:
   1. Pull out the locks at both sides of the socket (step 2, Image 14–33).
   2. Pull out the flat cable from the socket (step 3, Image 14–33).

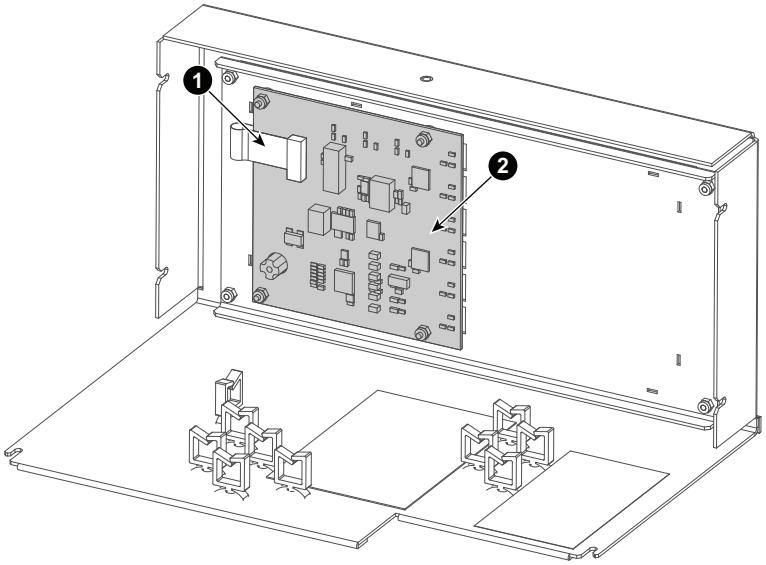


Image 14–32

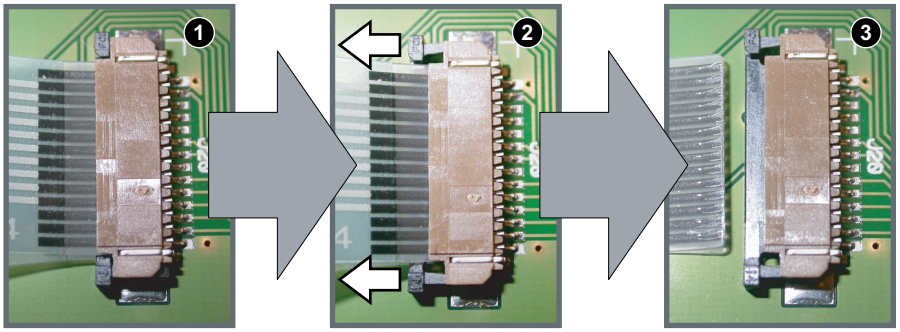


Image 14–33

2. Remove the 4 lock nuts (reference 3, Image 14–34) from the Button module mounting bolts.

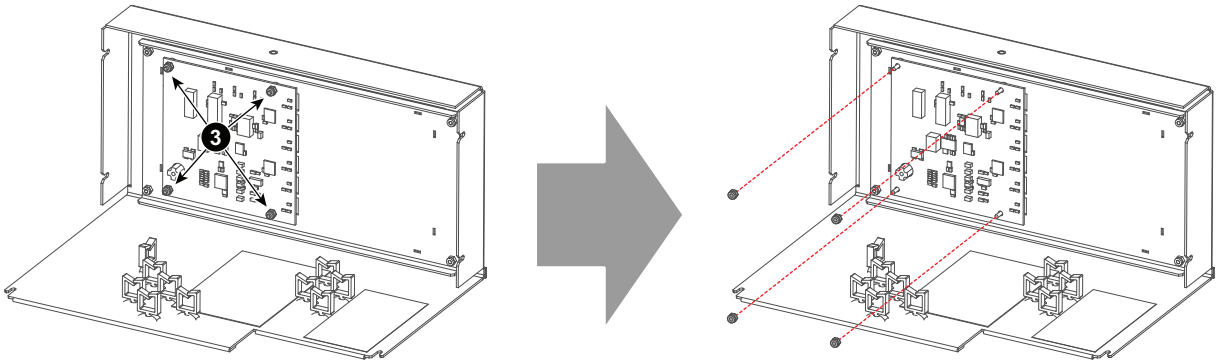


Image 14–34

3. Remove the Button module (reference 4, Image 14–35).

   *Tip:* Make sure the 4 washers (reference 5, Image 14–35) don't drop off the Button module mounting bolts.

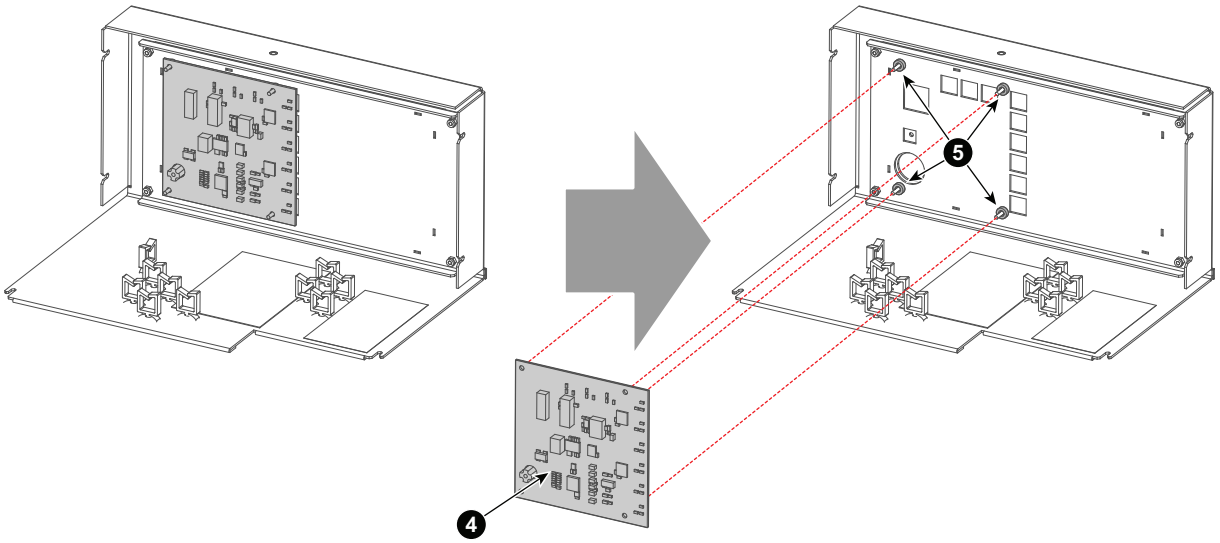


Image 14–35

4. Install the new Button module (reference 6, Image 14–36).

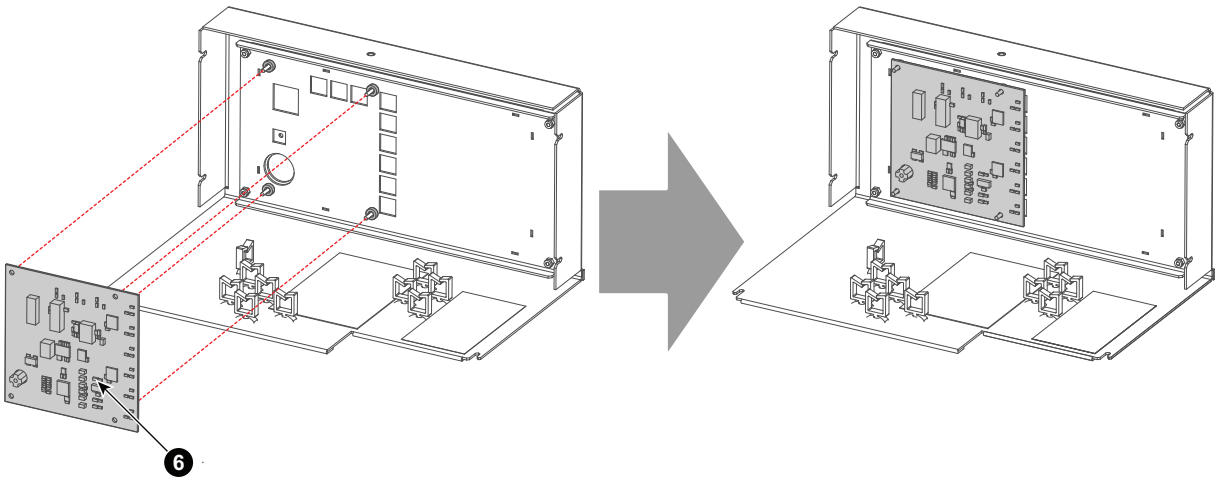


Image 14–36

5. Tighten the 4 lock nuts (reference 7, Image 14–37) on the Button module mounting bolts.

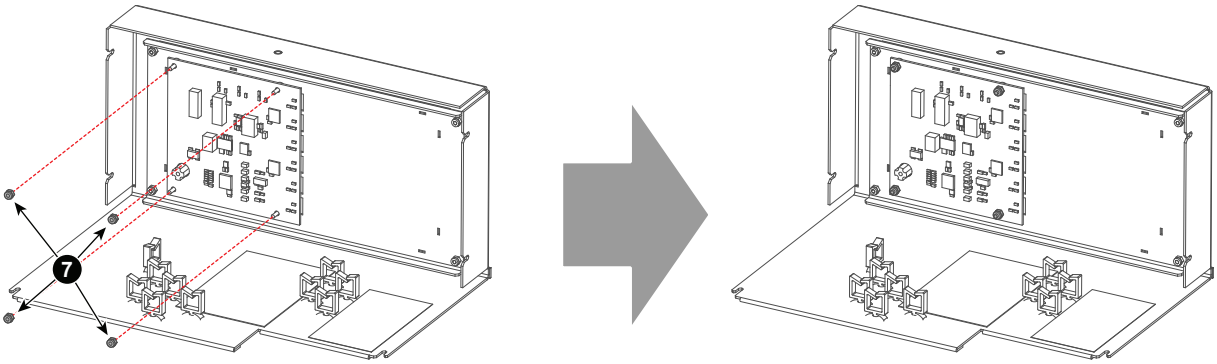


Image 14–37

6. Connect the flat cable to the Button module by performing the following procedure:
   1. Make sure the locks at both sides of the socket are pulled out (step 1, Image 14–38).
   2. Insert the flat cable into the socket (step 2, Image 14–38).
   3. Lock the flat cable by pushing in the locks at both sides of the socket (step 3, Image 14–38).

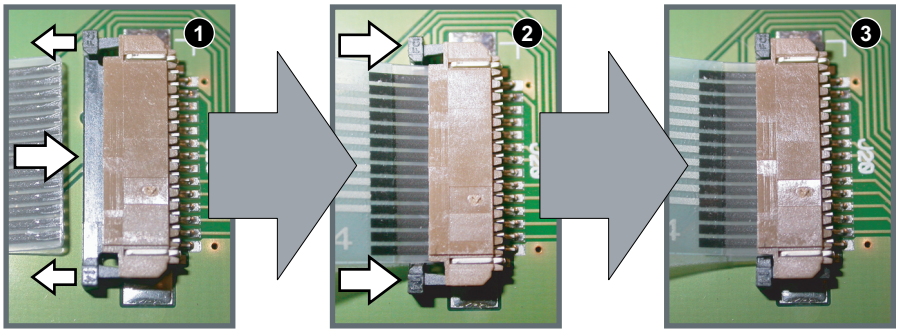


Image 14–38

# 14.17 Replacement of the Keypad (first generation Keypad)

This procedure assumes that the Button assembly is already removed from the Card Cage.

## Required tools

5.5 mm nut driver

## How to replace the Keypad?

1. Disconnect the flat cable (reference 1, Image 14–39) from the Button module (reference 2, Image 14–39) by performing the following procedure:
   1. Pull out the locks at both sides of the socket (step 2, Image 14–40).
   2. Pull out the flat cable from the socket (step 3, Image 14–40).

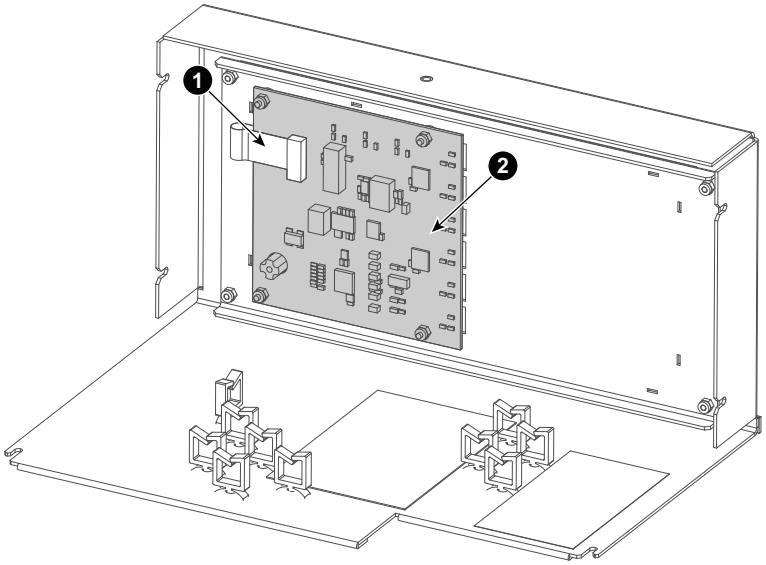


Image 14–39

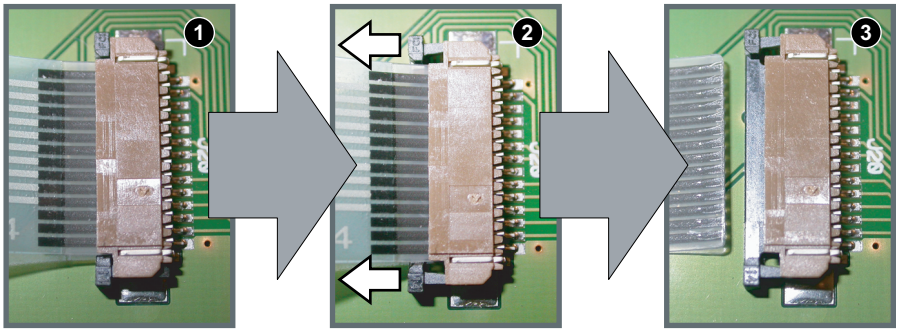


Image 14–40

2. Remove the 4 lock nuts (reference 3, Image 14–41) from the Button module mounting bolts.

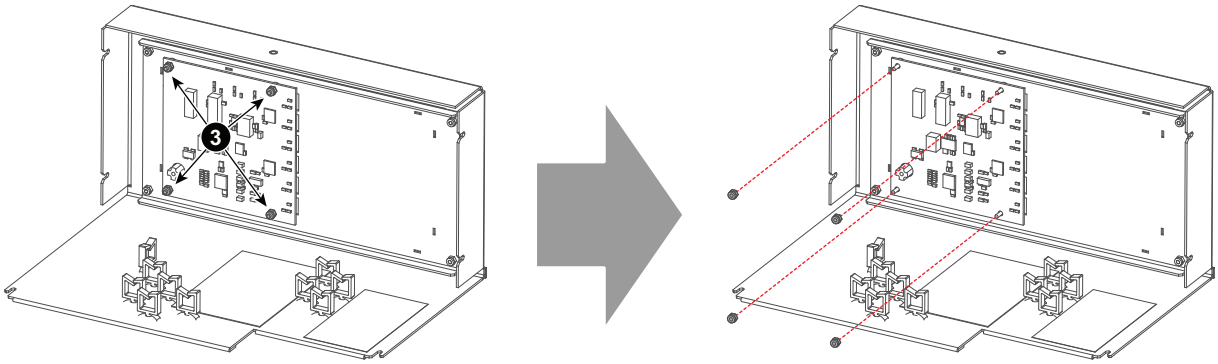


Image 14–41

3. Remove the Button module (reference 4, Image 14–42) and the 4 washers (reference 5, Image 14–42) from the Button module mounting bolts.

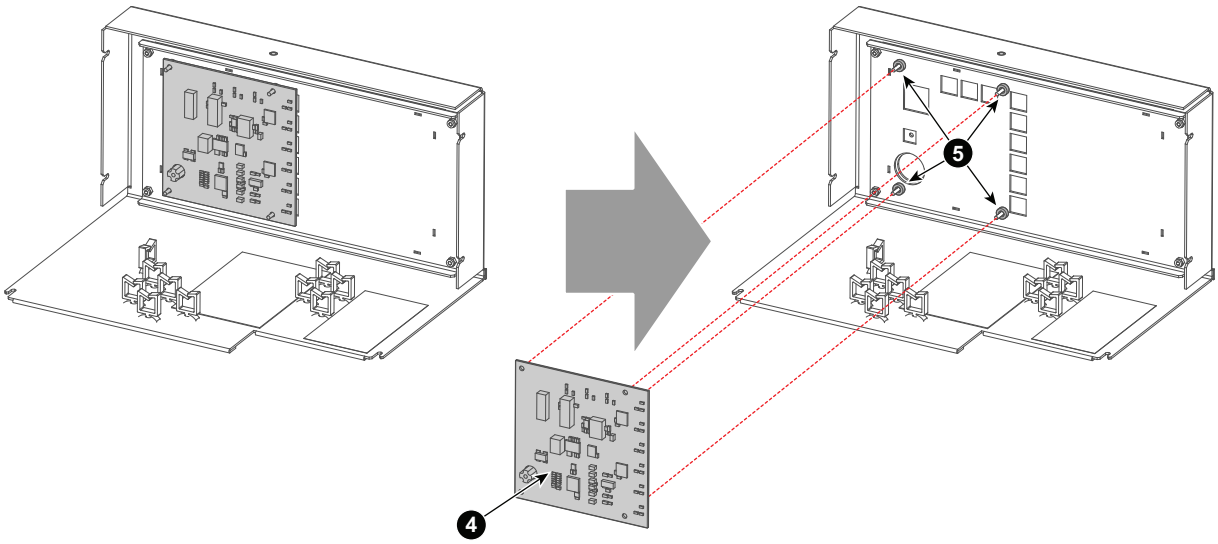


Image 14–42

4. Remove the 4 lock nuts (reference 6, Image 14–43) from the Keypad mounting bolts.

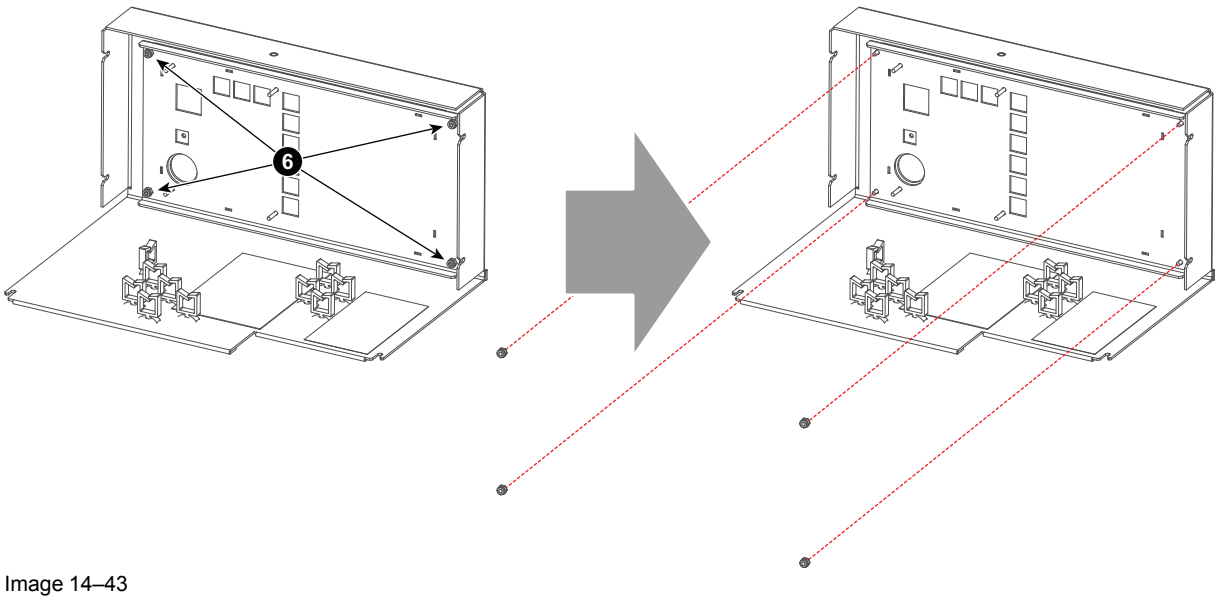


Image 14–43

5. Remove the Keypad (reference 7, Image 14–44).

*Tip:* Make sure the 4 washers (reference 8, Image 14–44) don't drop off the Keypad mounting bolts.

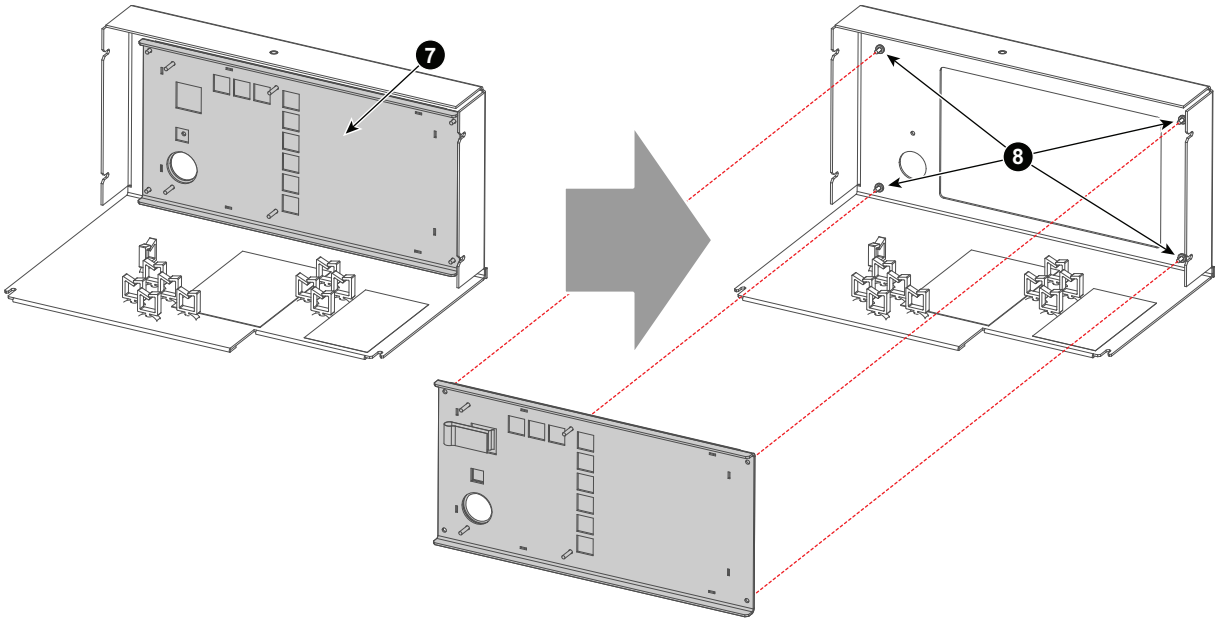


Image 14–44

6. Install the new Keypad (reference 9, Image 14–45).

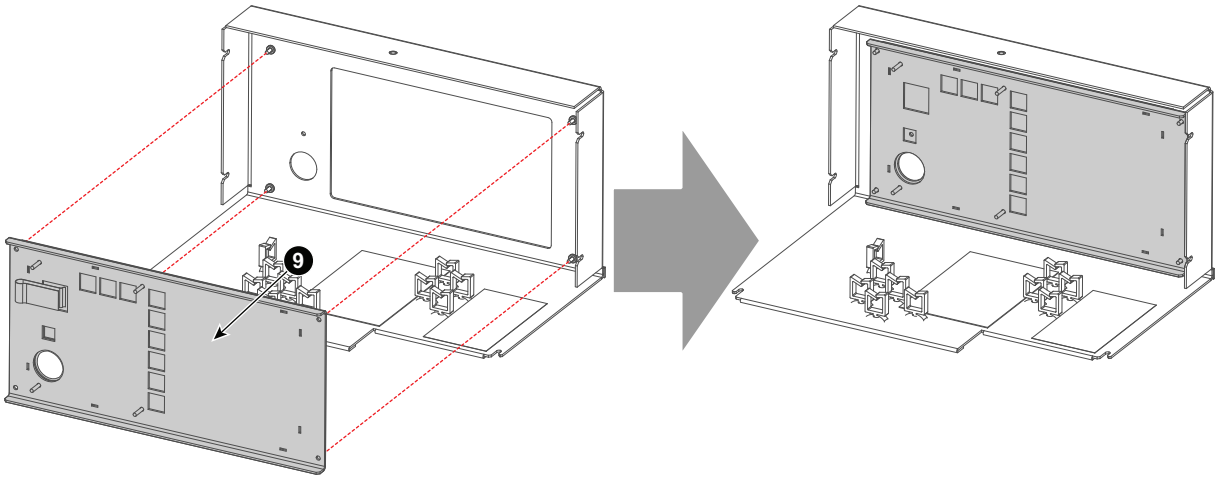


Image 14–45

7. Tighten the 4 lock nuts (reference 10, Image 14–46) on the Keypad mounting bolts.

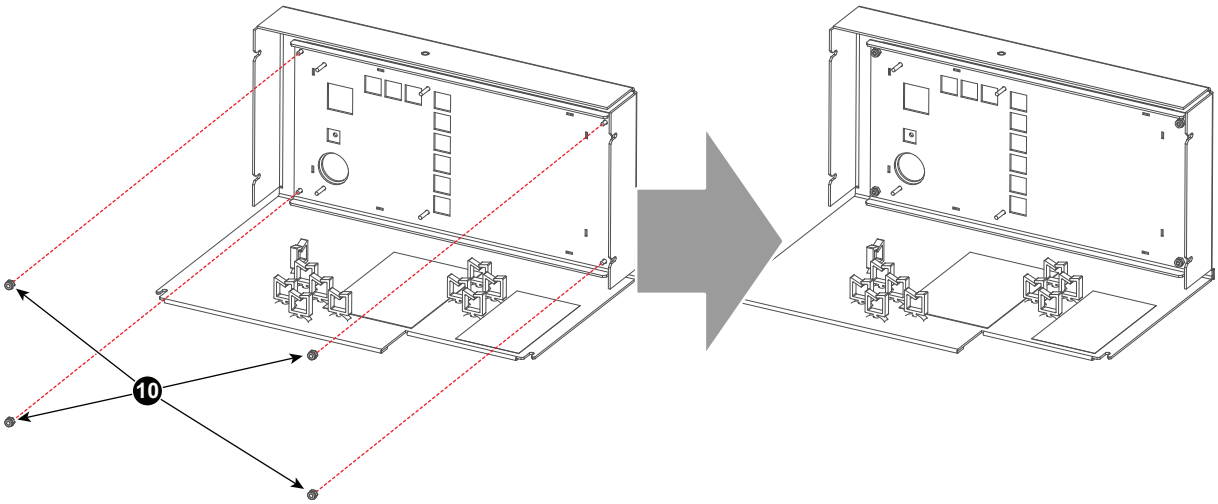


Image 14–46

8. Install the new Button module (reference 11, Image 14–47).

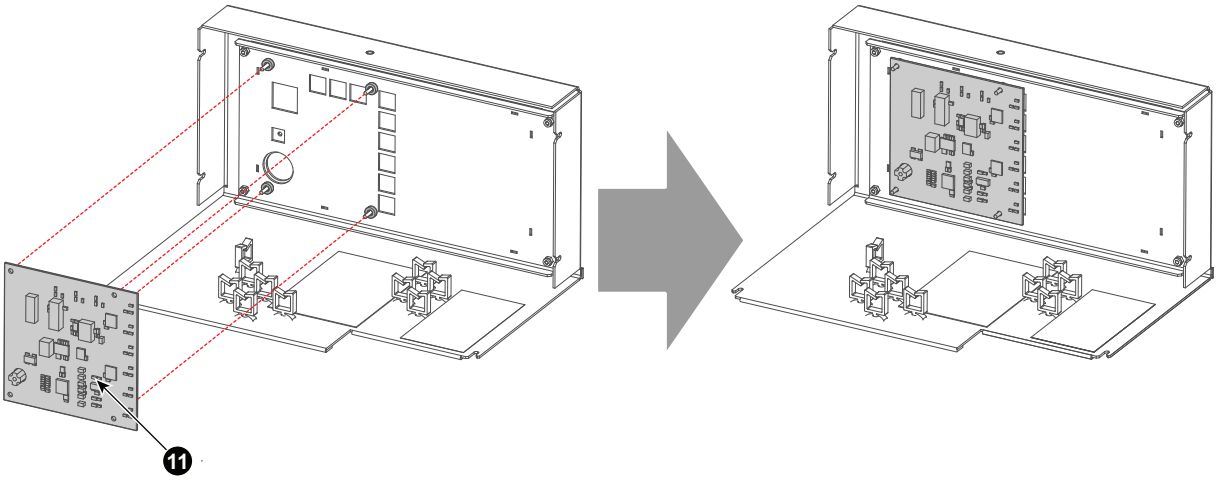


Image 14–47

**9.** Tighten the 4 lock nuts (reference 12, Image 14–48) on the Button module mounting bolts.

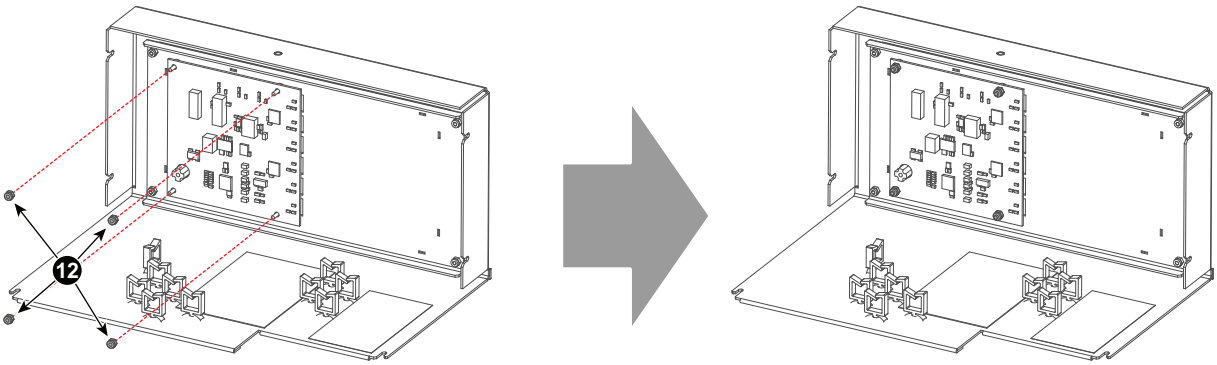


Image 14–48

**10.** Connect the flat cable to the Button module by performing the following procedure:

1. Make sure the locks at both sides of the socket are pulled out (step 1, Image 14–49).
2. Insert the flat cable into the socket (step 2, Image 14–49).
3. Lock the flat cable by pushing in the locks at both sides of the socket (step 3, Image 14–49).

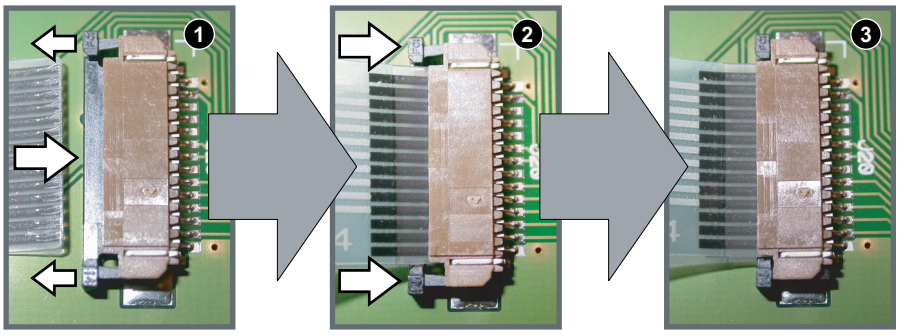


Image 14–49

# 14.18 Replacement of the Keypad assembly (second generation Keypad)

## How to replace the Keypad assembly?

1. Remove the 4 lock nuts (reference 1, Image 14–50) from the Keypad assembly mounting bolts.
2. Remove the Keypad assembly (reference 2, Image 14–50).

   *Tip:* Make sure the four washers (reference 3, Image 14–50) don't drop off the keypad assembly mounting bolts.
3. Install the new Keypad assembly (reference 2, Image 14–50).
4. Tighten the 4 lock nuts (reference 1, Image 14–50) on the Keypad assembly mounting bolts.

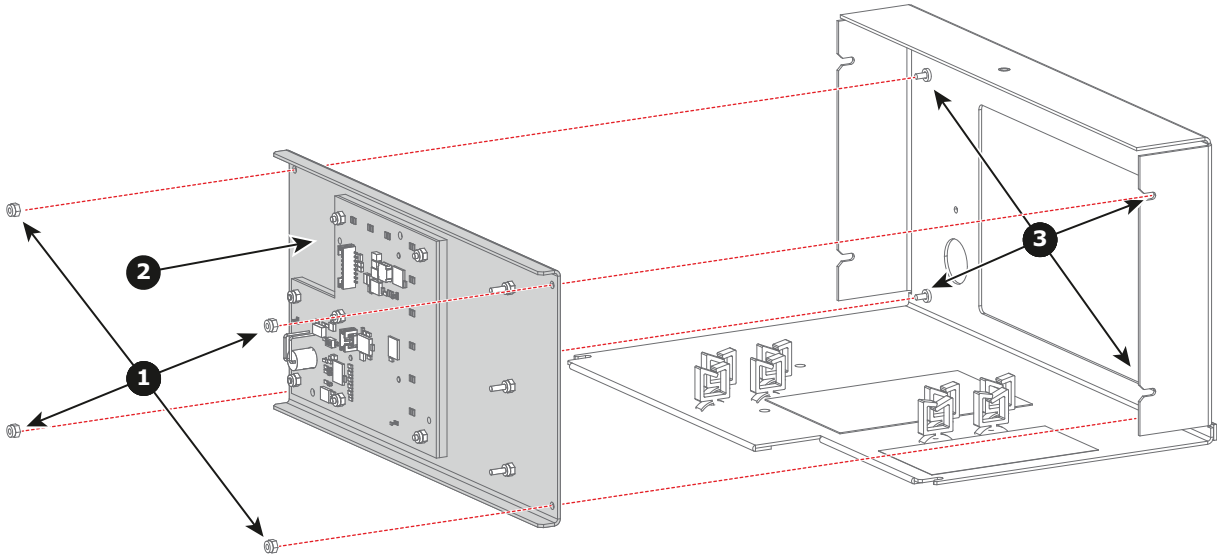


Image 14–50

# 14.19 Replacement of the signal back plane

## About the Signal back plane

- Provides direct connection between all components listed below:
  - Fan Controller
  - Integrated Cinema Processor
  - HD-SDI Board
  - Cinema Controller
  - ID card
- All DC voltages are passed through this board from SMPS board to final board / module.
- Provides cable connection between all components listed below:
  - SMPS board
  - Pump
  - Lens motors and lens holder
  - Light processor
  - CLO sensor
  - Dolby 3D controller
  - Fans
  - Security switches
  - Temperature sensors
  - Touch panel
  - Keypad
  - Prism switch sensor
  - Dowser

## Required tools

- Flat blade screwdriver
- Allen key 2.5 mm

## Preparations

1. Remove the front, input cover and top cover, see Removal and Installation of the projector covers.
2. Remove the convergence cover plate as follow:
   1. Loosen both screws (reference 1 and 2).
   2. Slide the plate forwards until all hooks at both sides of the plate become free.
   3. Take off the plate.

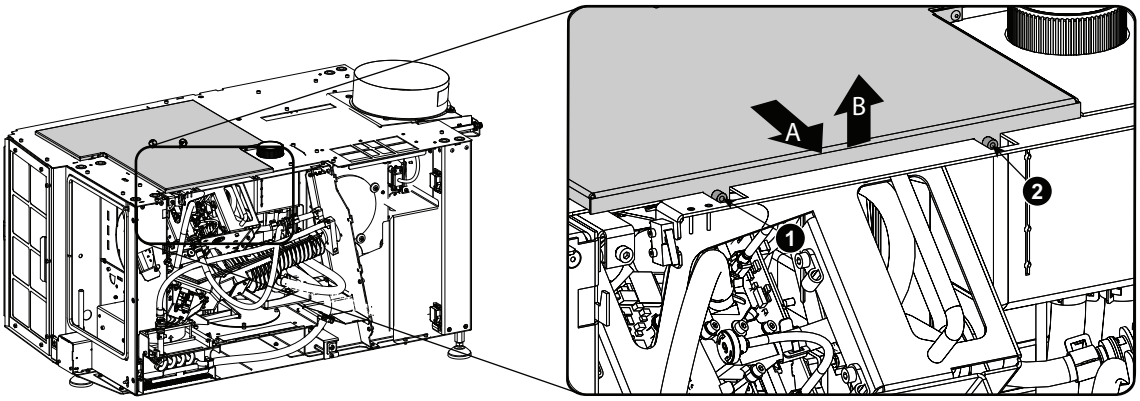


Image 14–51 Convergence cover plate

3. Remove the button panel assembly, “Removal of the Button assembly”, page 370.
4. Remove the following:
   - the fan controller board.
   - Integrated cinema controller board
   - the HD-SDI board

- Cinema controller board

5. Pull the small handle a little backwards and then to the front of the projector until the filter frame is released and slide out the filter.

## Removing the signal backplane

1. Remove the first intermediary plate as follow:
   1. Unplug the fan connection from the signal backplane (1).
   2. Turn out both fixation screws (2).
   3. Slide out the plate (3).

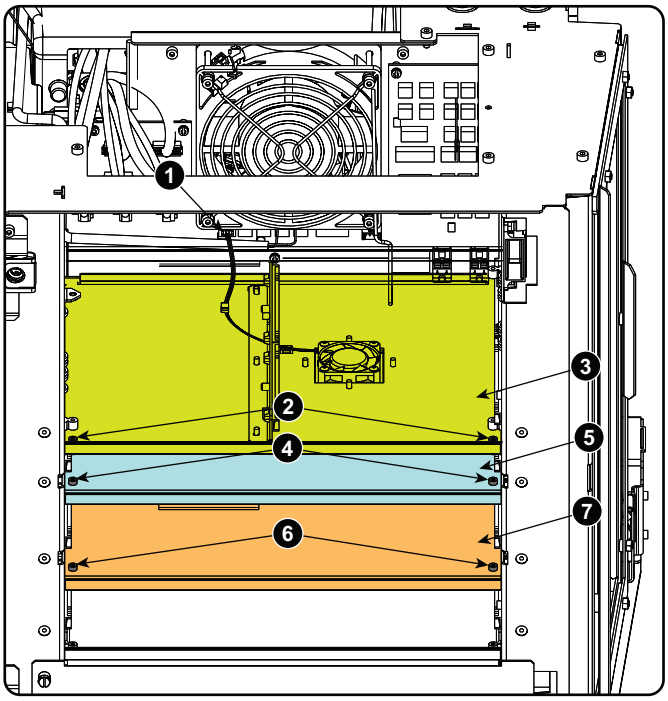


Image 14–52 Intermediary plate

2. To remove the next plate (5), turn out both fixation screws (4) and slide out the plate.

   Repeat in the same way for the next plate (7).

3. Unplug all cables from the signal backplane. Those inside the card cage and those next to the fans accessible via the front side.

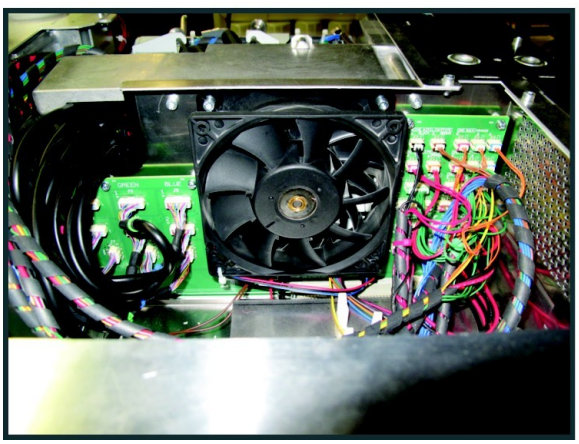



Image 14–53 Backplane connections

4. From inside the card cage, remove the screws 1 to 6

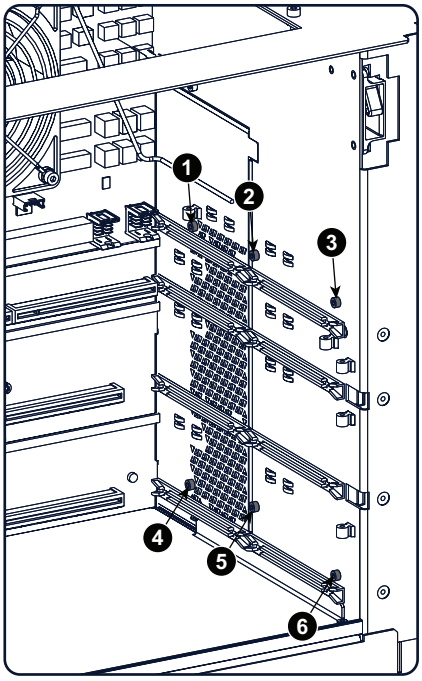


Image 14–54 Side card cage, screws

5. From the front side, pull the fan assembly a little bit forward and turn it to the left, or take it out completely.

   The blue and black wires coming from the SMPS are tied to the fan assembly. To make it possible to move the assembly forward, open the SMPS compartment and unplug the connector with the blue and black wires (reference 3 and 4 on Image 14–56).

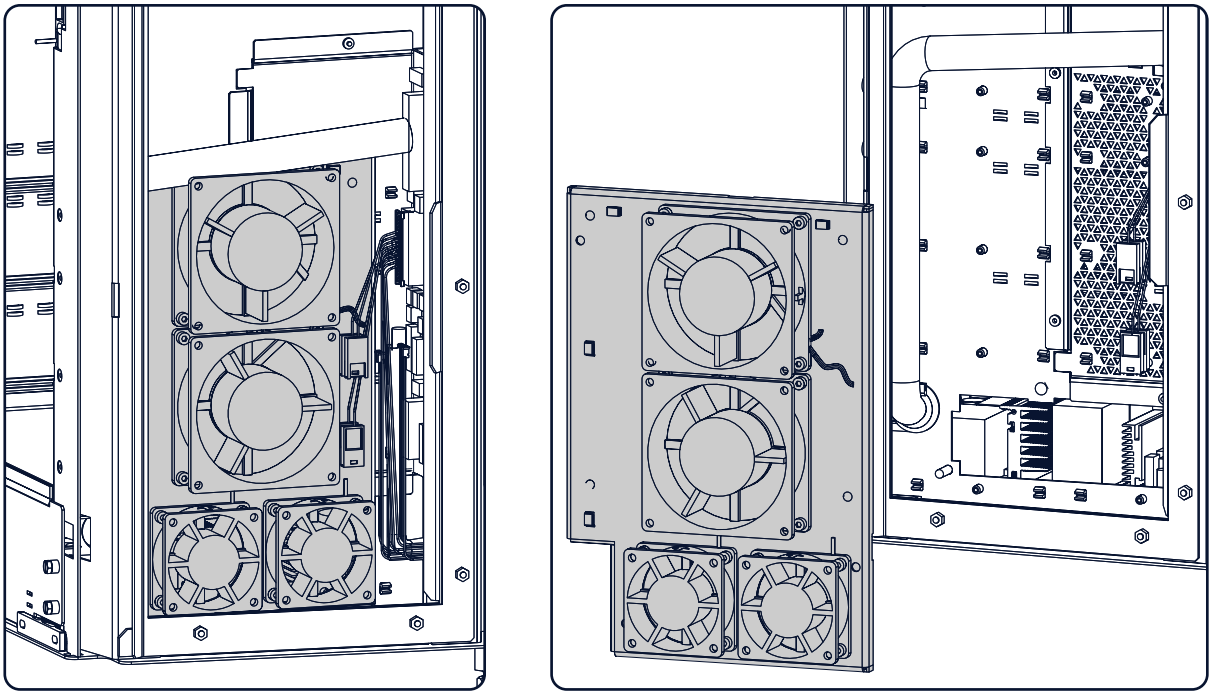

Image 14–55 Fan assembly removal

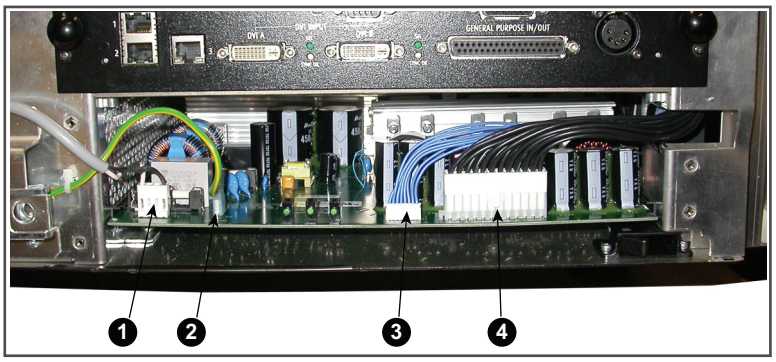


Image 14–56 SMPS connections

6. Pull out the hatch in the side of the card cage.

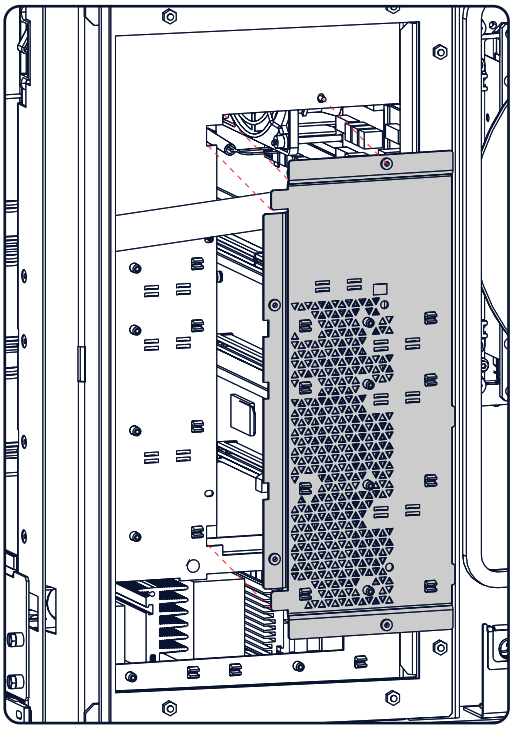

Image 14–57 Hatch removal

7. Remove the fixation screws 1 to 11 of the backplane unit.

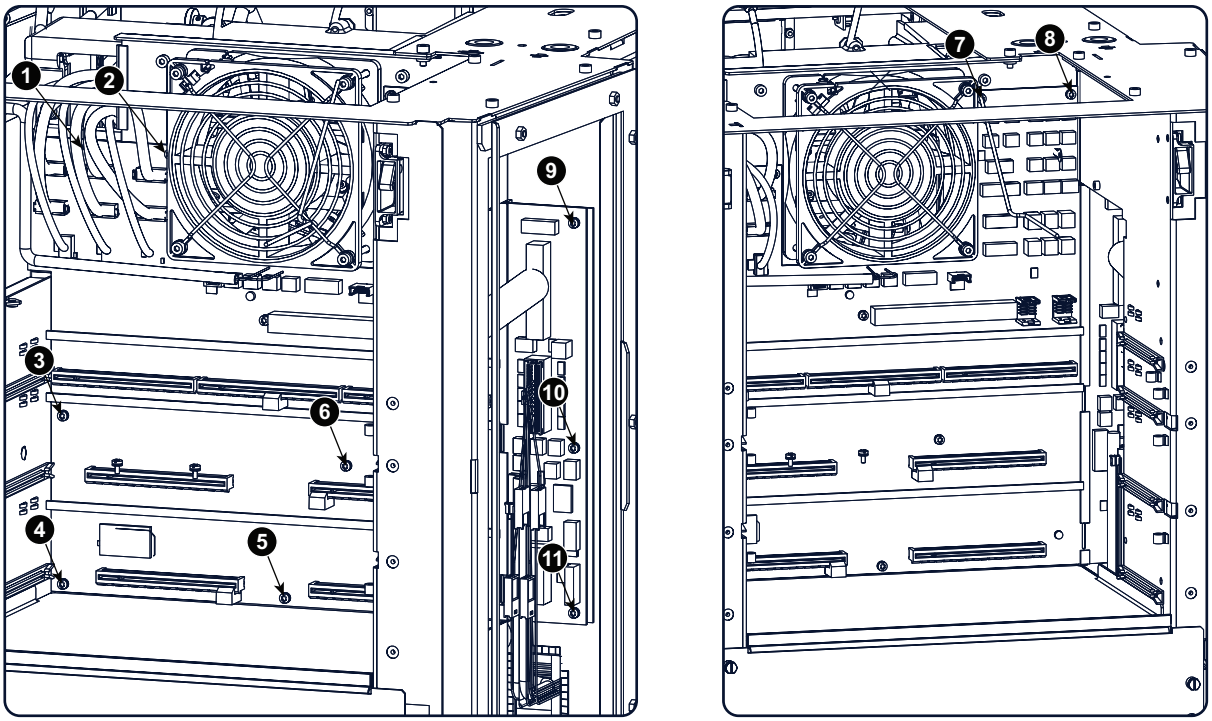


Image 14–58 Backplane fixation screws

8. Pull the signal backplane a little bit forward Pivot the left side as far as possible and slide out the board.

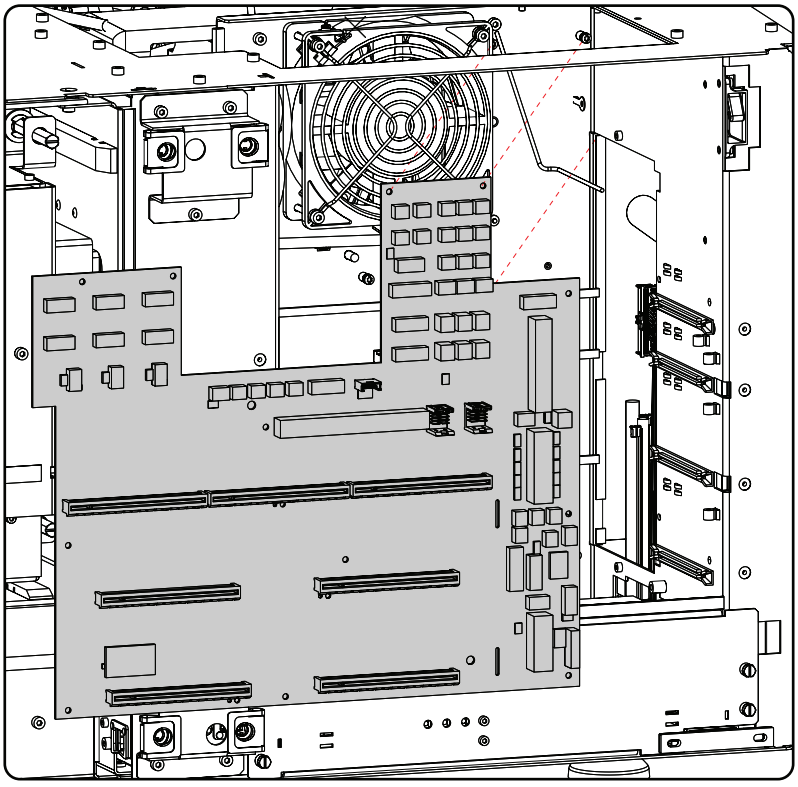

Image 14–59 Signal backplane removal

9. Remove the projector ID card.

   Push the card holder a few millimeters to the left until the lock opens.

   Turn it over and slide out the projector ID card.

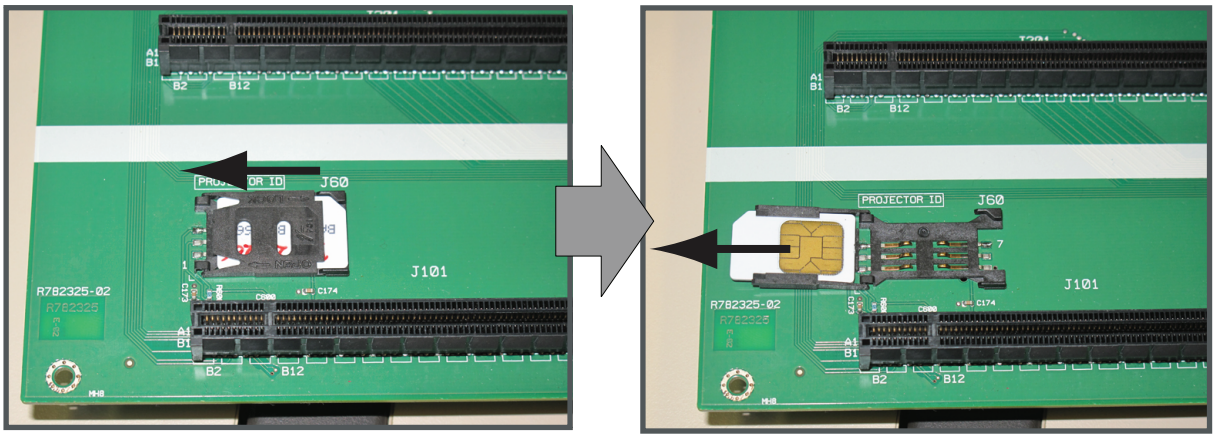


Image 14–60 Projector ID card removal

## Mounting new signal backplane

1. Open the Projector Id card holder by pushing it a few millimeters to the left and turn it over.

   Insert the Projector ID card with the chip upwards.

   Turn the holder back, push it a little bit down while sliding it to the right until it locks.

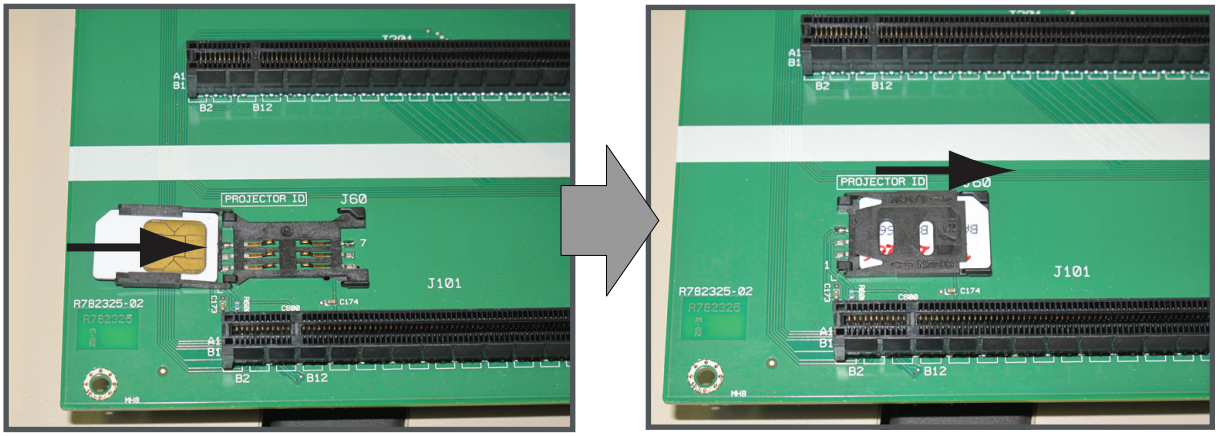


Image 14–61 Projector ID card, installation

2. Take the new backplane and slight the right side under an angle through the gap in the side of the card cage.

   Pivot the backplane on its place.

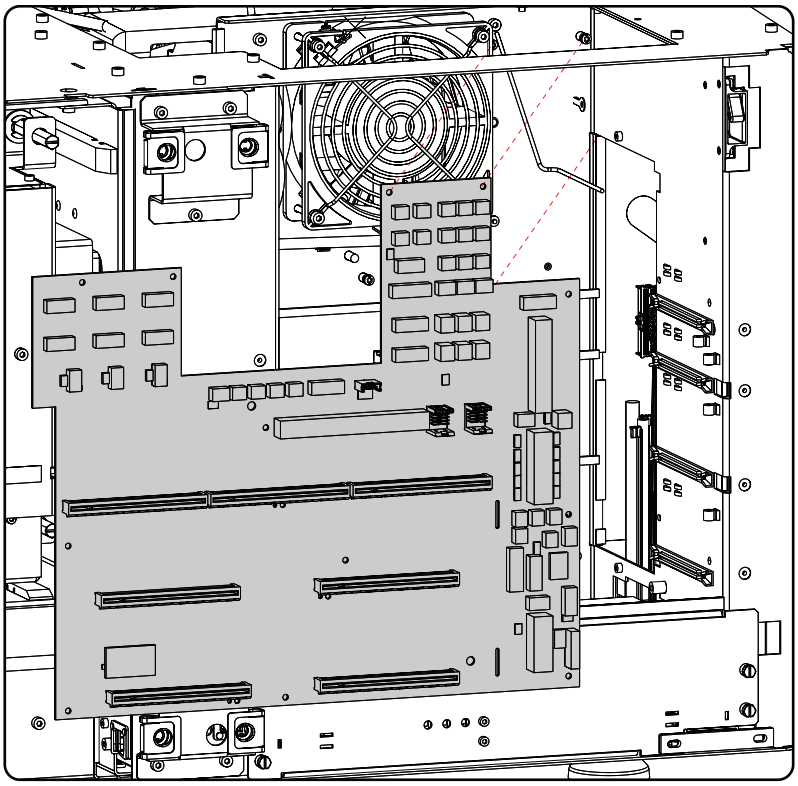

Image 14–62 Signal backplane insertion

3. Drive in screw 1 to 11.

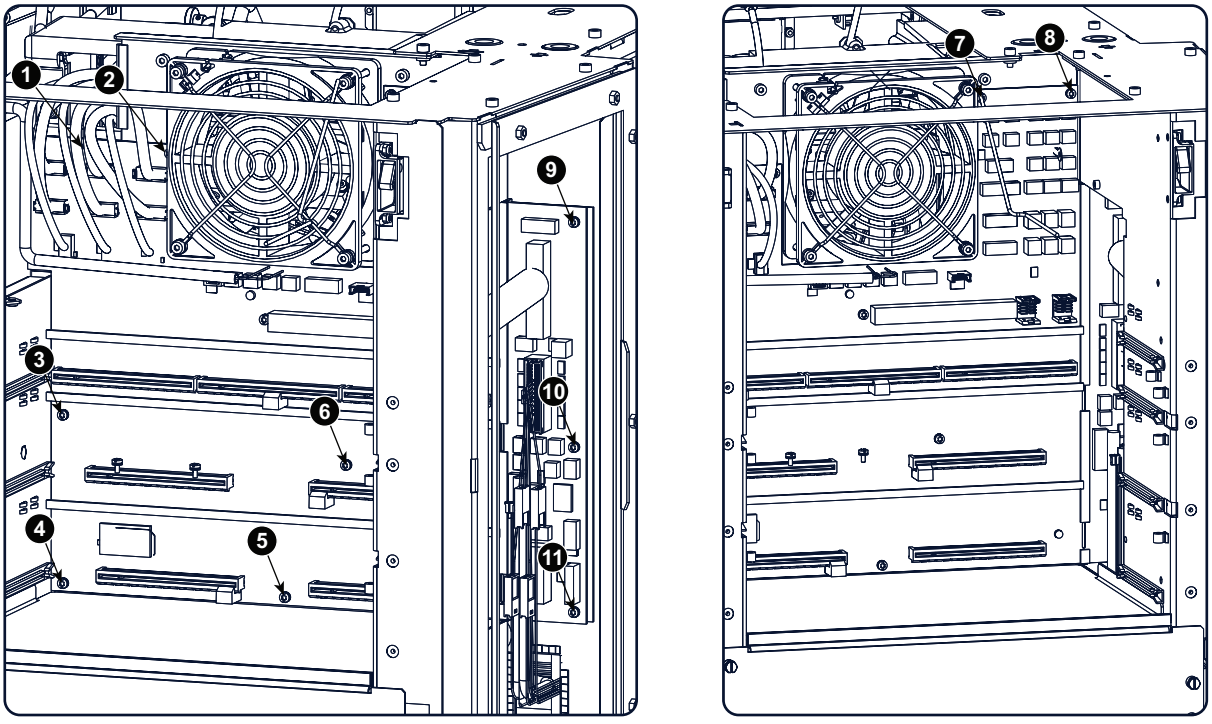


Image 14–63 Backplane fixation screws

4. Place the hatch back on its place.

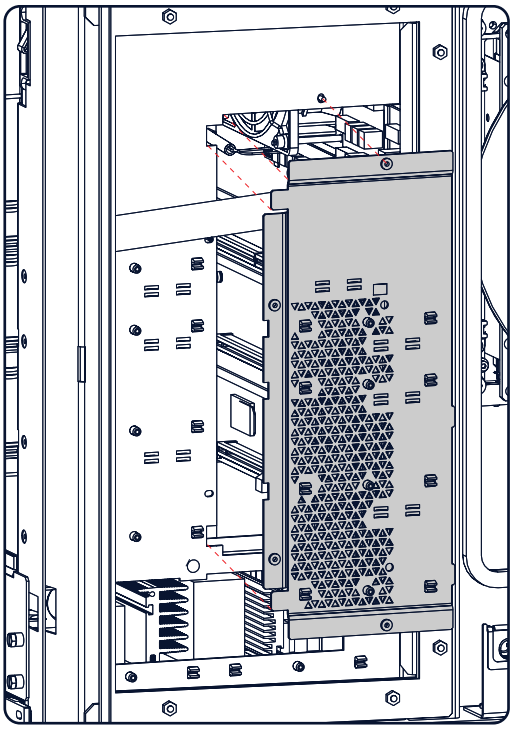

Image 14–64 Hatch installation

5. Mount the fan assembly back on its place.

   Pull the blue and black wire unit towards the Switched mode power supply and plug-in both wire units (3 an d4).

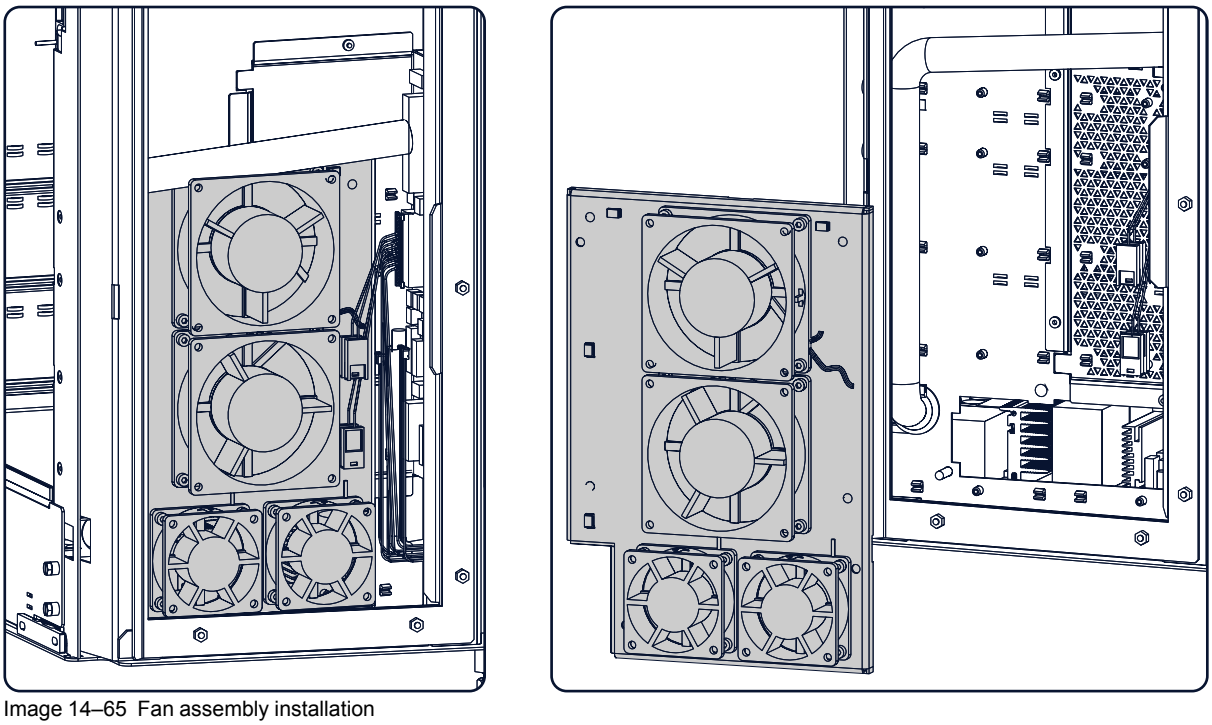

Image 14–65 Fan assembly installation

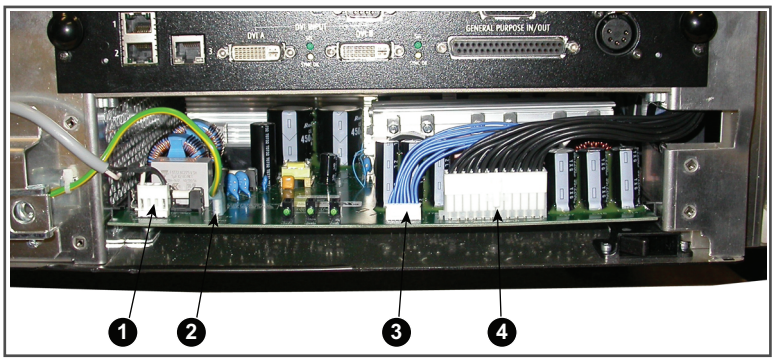


Image 14–66 SMPS connections

6. From the inside of the card cage, drive in screw 1 to 6 to fixate the fan assembly.

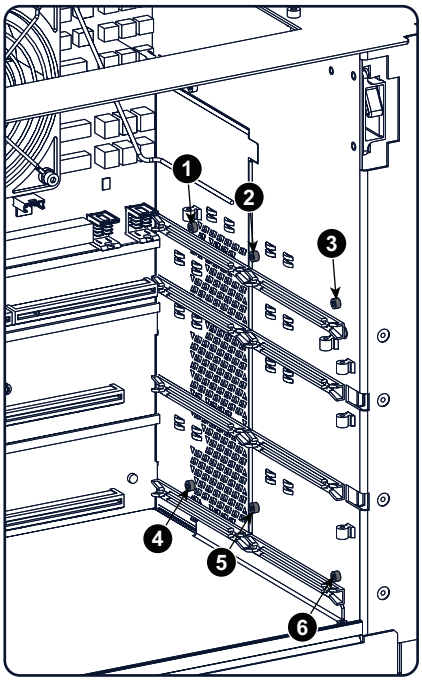


Image 14–67 Side card cage, screws

7. Make all electrical connections. See *"Electrical connections"* further in this topic for more info
8. Insert the lower intermediary plate and drive in both fixation screws.
   Repeat for the second intermediary plate and the upper plate (plate with fan)

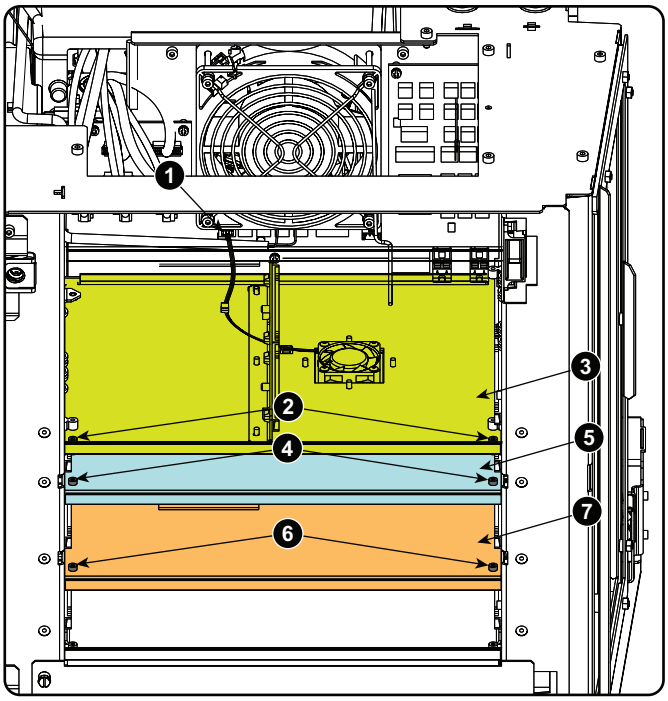


Image 14–68 Intermediary plates

9. Reconnect the fan with the signal backplane.

## Finalizing the procedure

1. Reinstall the SMPS cover plate.
2. Insert from top to bottom the following:
   - the fan controller board.
   - the Integrated cinema controller board
   - the HD-SDI board
   - the Cinema controller board
3. Mount the button panel, “Installation of the Button assembly”, page 373.
4. Mount the convergence cover plate.
5. Reinstall the housing, see Removal and Installation of projector covers.

## Electrical connections

### Formatter connections

All formatter cables, data and power, have a colored cable tie. There are 3 cables per color available, two with same connector but one with one cable tie and one with 2 cable ties. The color name is screened on the printed circuit board (1, 2 and 3). Plug in the cable with e.g. a red cable tie into the connector with the same size and with the indication red. For those with the same connector plug the one with one cable tie into the upper connector (row A), The one with 2 cable ties into the second connector (row B). Repeat for all other cables.

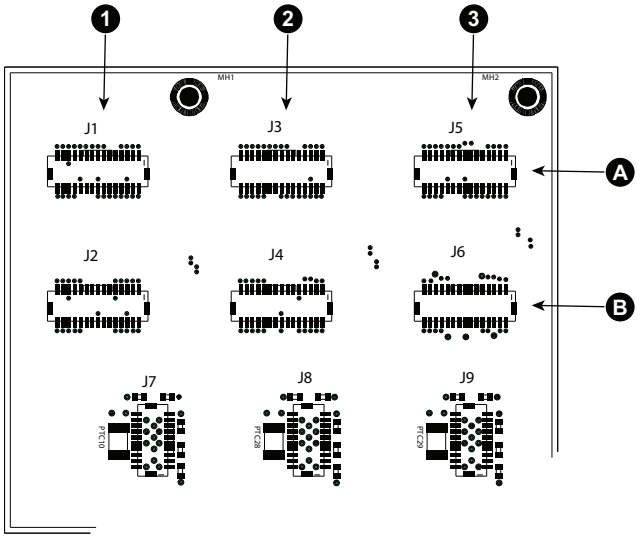


Image 14–69 Formatter connections

1 Red formatter connections
2 Green formatter connections
3 Blue formatter connections

A Cables with one cable tie
B Cables with two cable ties

### Right side connections

Color convention for the connections.

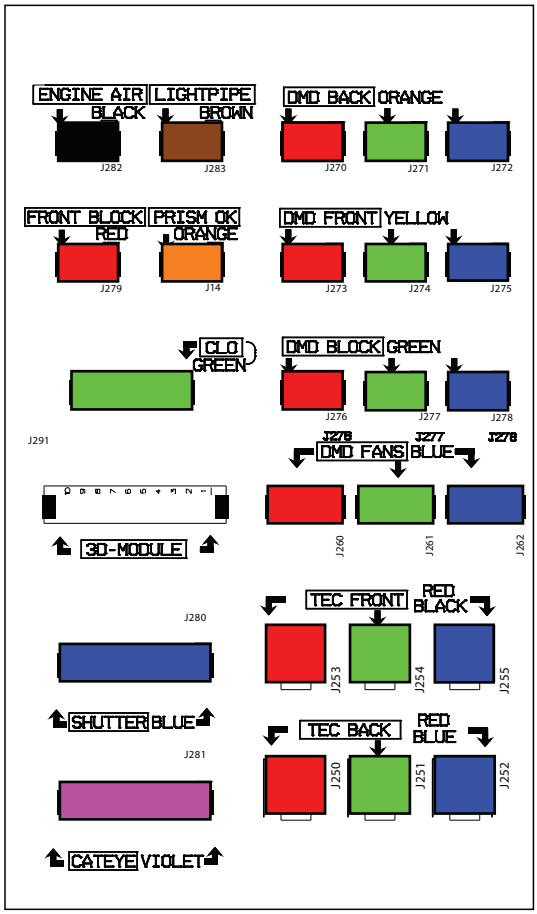


Image 14–70 Color coding cables

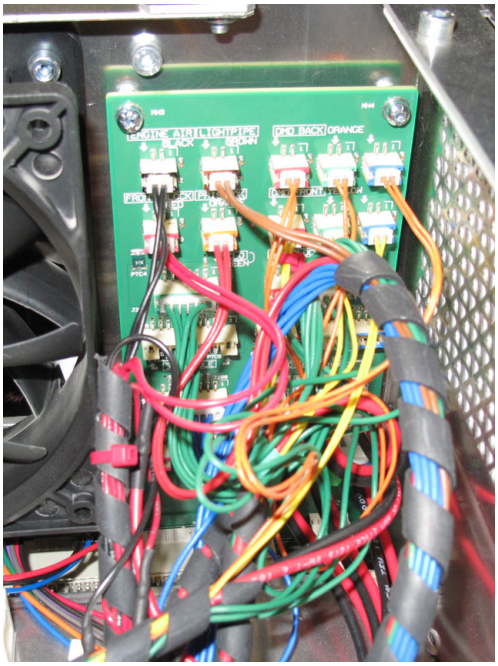

Image 14–71 Color coding cables, image

The color indication on the socket corresponds with the colored cable tie on the cable next to the connector.

The screened color indication just above the sockets corresponds with the color of the wires in the cable tree.

### Connections below light processor compartment fan

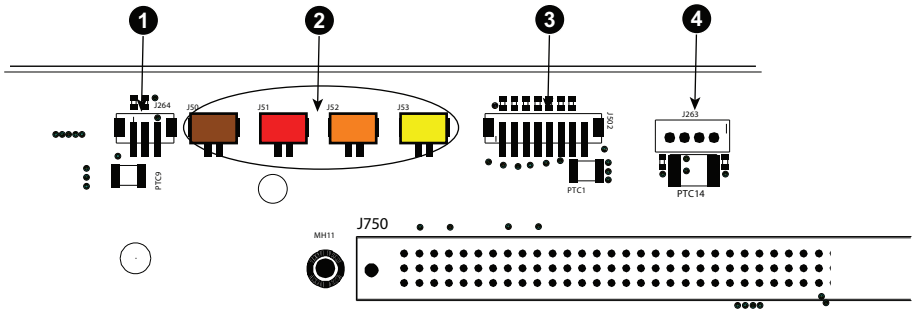


Image 14–72 Cabling below fan

1 ICP fan connection
2 Security door switches
3 Button module connection
4 Light processor compartment fan connection

The color indication on the socket corresponds with the color of the wires in the cable tree.

**Connections accessible via front side**

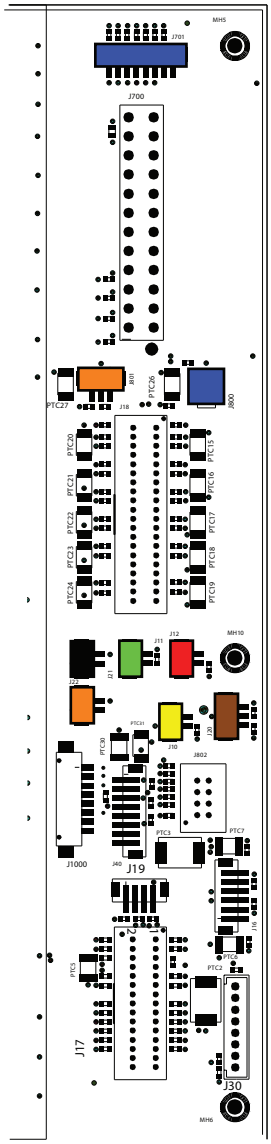


Image 14–73 Front connections

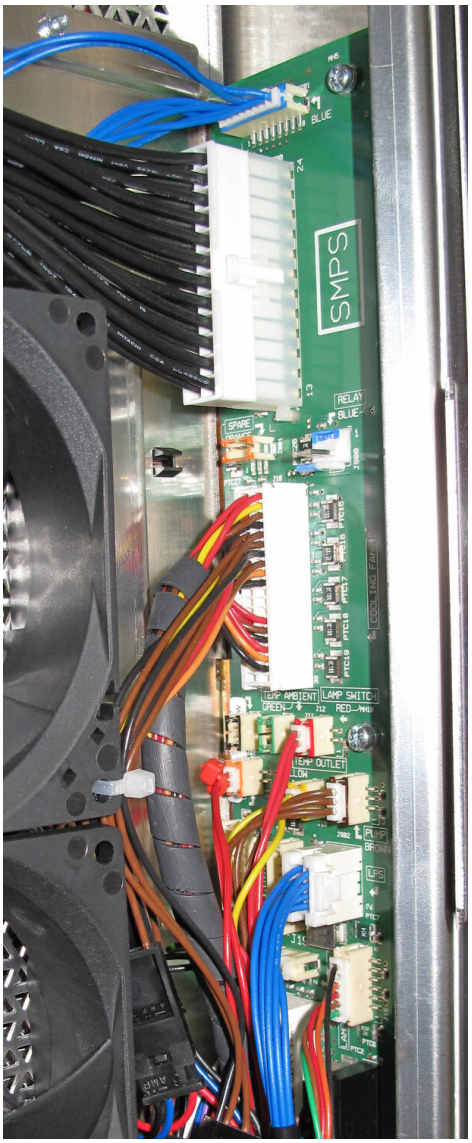


Image 14–74

The color indication on the socket corresponds with the color of the wires in the cable tree. If there are equal colors, look to the cable tie.

All other connectors are different.

# 14.20 Replacement of the Status Light

To replace the Status Light the projector rear cover has to be removed first. This procedure assumes that the rear cover is already removed.

## Required tools

2.5mm Allen wrench.

## How to replace the Status Light at the rear of the projector?

1. Unplug the wire unit (reference 1) from the Status Light board rear side.
2. Remove the Status Light board by loosening the two screws (reference 2). Use a 2.5mm Allen wrench.
3. Install a new Status Light.
4. Reconnect the wire unit with the Status Light board.

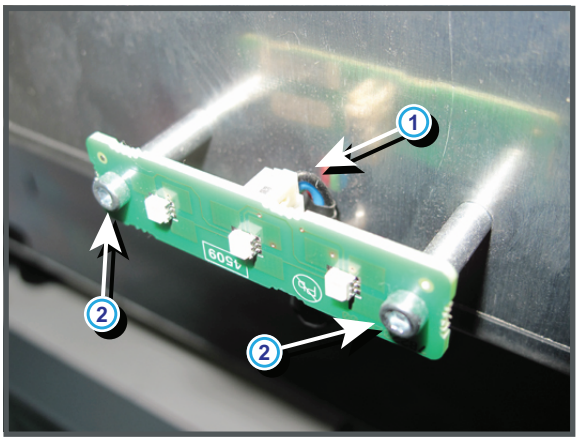


Image 14–75

# 14.21 Authorization to clear security warning on the projector

## When is an authorization required to clear the security warning?

If a module has been removed or if the sealed compartment has been opened, an authorization will be required to clear the security warning.

## Required tools

- Security key (Dallas iButton®).
- Authorization pin code.

## Authorization procedure to clear security warning

1. Ensure that all modules are properly installed.
2. Start up the projector (standby mode).
3. Initiate authorization by holding the security key in the security socket D..

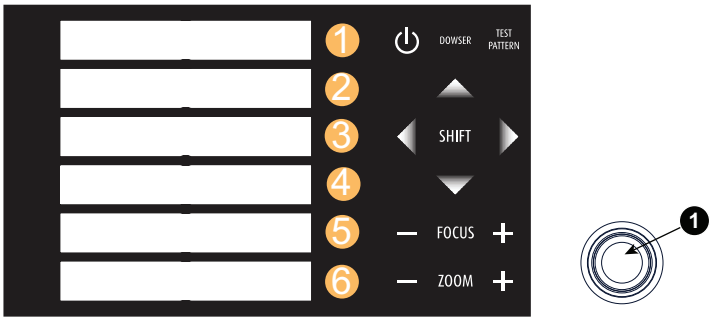


Image 14–76 Keypad

The color of the backlight of the numeric keys 1 to 6 of the local keypad changes from blue to yellow.

4. Enter pin code within 5 seconds.
   - In case no keys are pressed, the color of the backlight of the numeric keys 1 to 6 changes back to blue.
   - In case of an **incorrect code** entry, the color of the backlight of the numeric keys changes to **red** for 1 second and then back to blue.
   - In case of a **correct code** entry, the color of the backlight of the numeric keys 1 to 10 changes to **green** for 1 second and then back to blue.

Each attempt to clear the security warning and its result (successfully or unsuccessfully) is logged inside the projector.

# Software update via Communicator (DC update companion) 15

15.1 Software upgrade, launch DC update companion ..... 400
15.2 Software upgrade, projector, ICMP or touch panel ..... 403
15.3 ICP software upgrade ..... 407
15.4 Link decryptor software update ..... 410
15.5 Update logging ..... 413

During an upgrade, certificate (code 5815) and key errors (code 5816) are possible. Restarting the projector will resolve these errors. If these errors remain after a restart, replace the ICP board.

# 15.1 Software upgrade, launch DC update companion

## What can now be done ?

The following updates of the software are possible with ***Communicator*** (DC update companion)

- Barco DC package update:
  - Projector software
  - Touch panel software
- Enigma link decryptor software
- Integrated Cinema Processor (ICP) software
- ICMP software

Download the corresponding update package from Barco's web site, http://www.barco.com on your PC. Select via the product name.

For Enigma link decrypor and ICP update package, unzip the package file into a new directory.

For the projector software, ICMP and the touch panel software package, unzipping is not possible. the file can be used as is.

The ICP and Linkdecryptor package file contains at least

- a zipped version of the update program which contains a *setup.exe* file to install the program. Can also be unzipped.
- a release file with the new software.
- a release note (pdf document)
- a Software Manifest for ICP Production Release (pdf document)

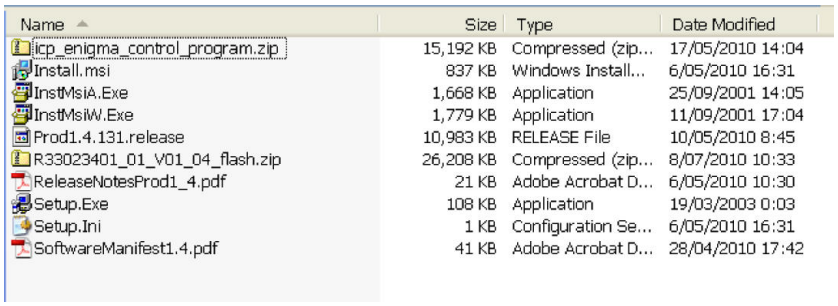


Image 15–1 Content ICP update package

DC Update Companion can also be started as a separate application. The start up button is located next to the Communicator start button in the start programs tree.

## How to launch

1. While in the *Maintenance* tab page, click on **Software update** (1).

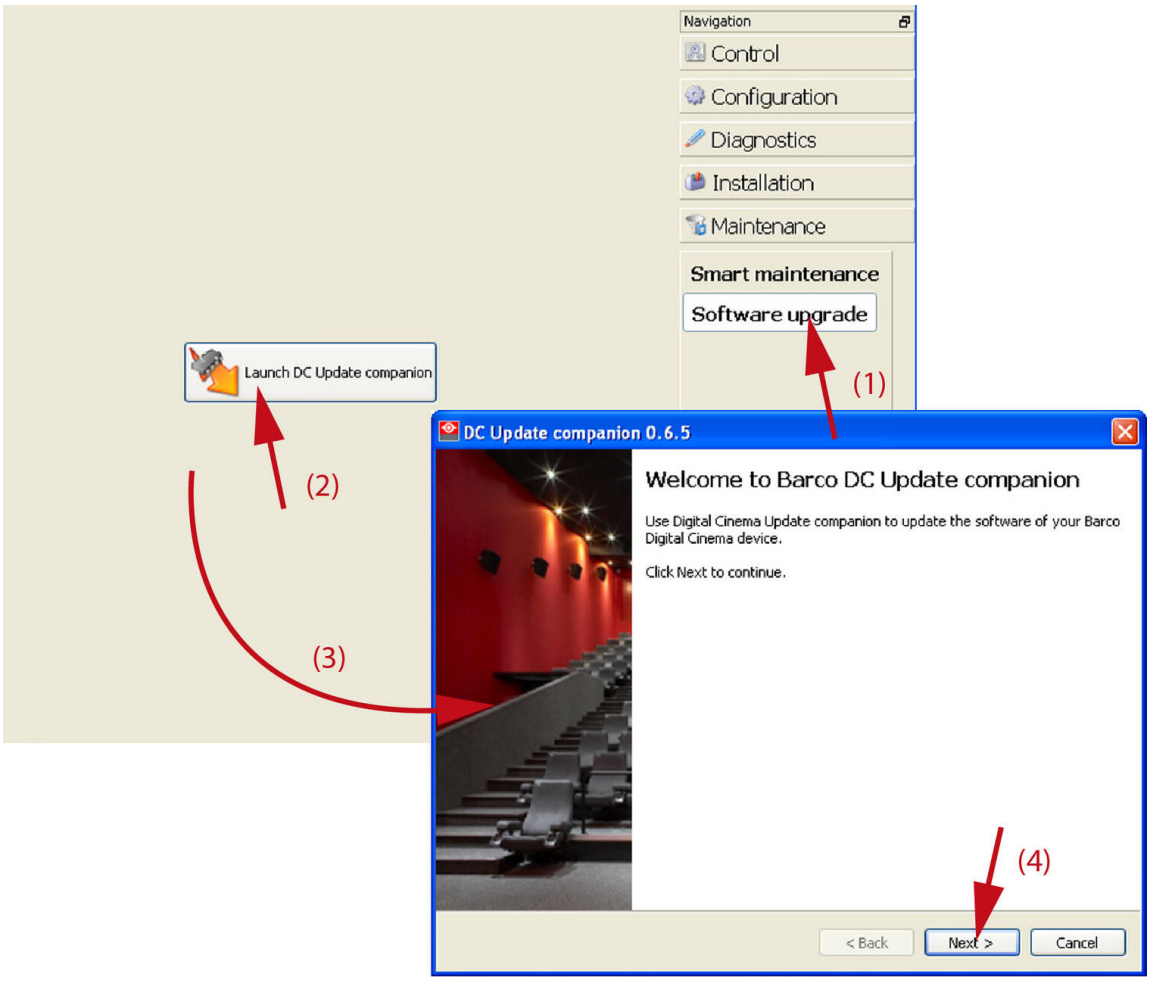


Image 15–2 Launch DC update companion

2. Click on **Launch DC update companion** (2).
   The *DC update companion* window starts up (3).
3. Click **Next** to continue (4).
4. Read the licence agreement and check accept. Click **Next** to continue.

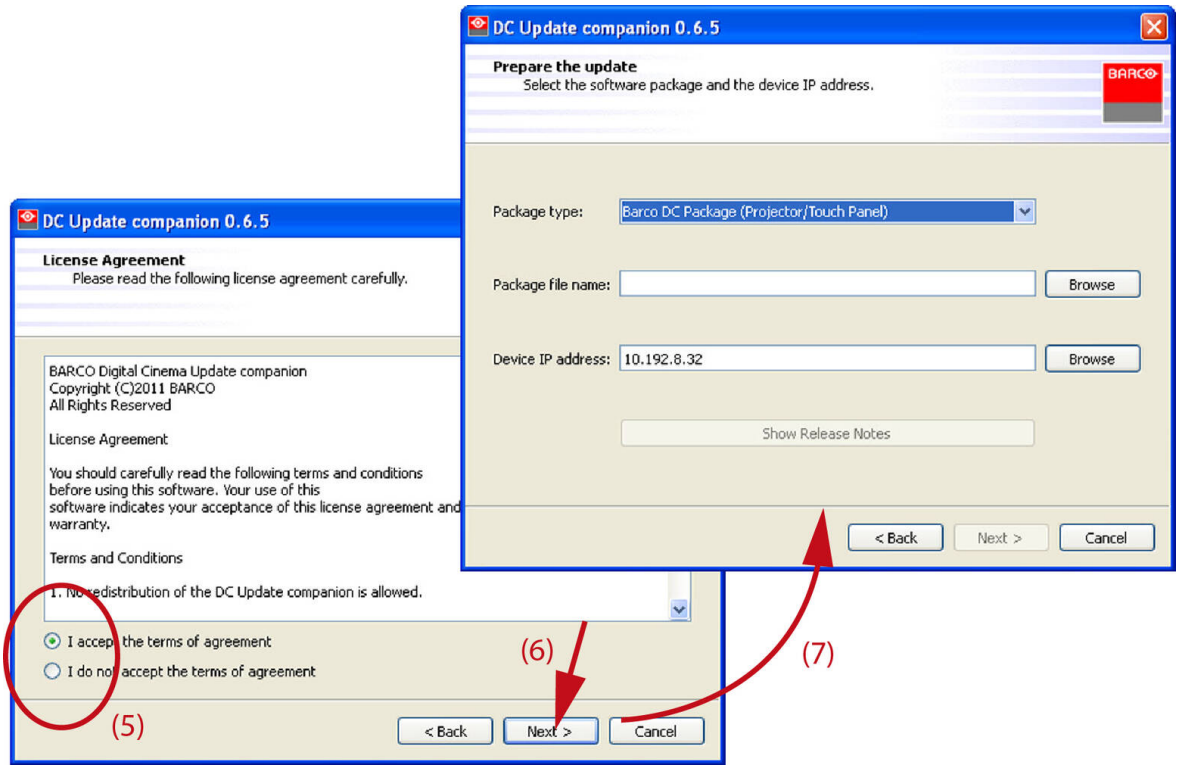


Image 15–3 Start up selection window

5. Continue with the specific procedure for each type of package.

# 15.2 Software upgrade, projector, ICMP or touch panel

## How to update

1. Launch the *DC Update Companion* as described in “Software upgrade, launch DC update companion”, page 400.
2. Select package type. Click on the drop down box (1) and select Barco DC Package (for projector or touch panel update) or ICMP package (for ICMP update).

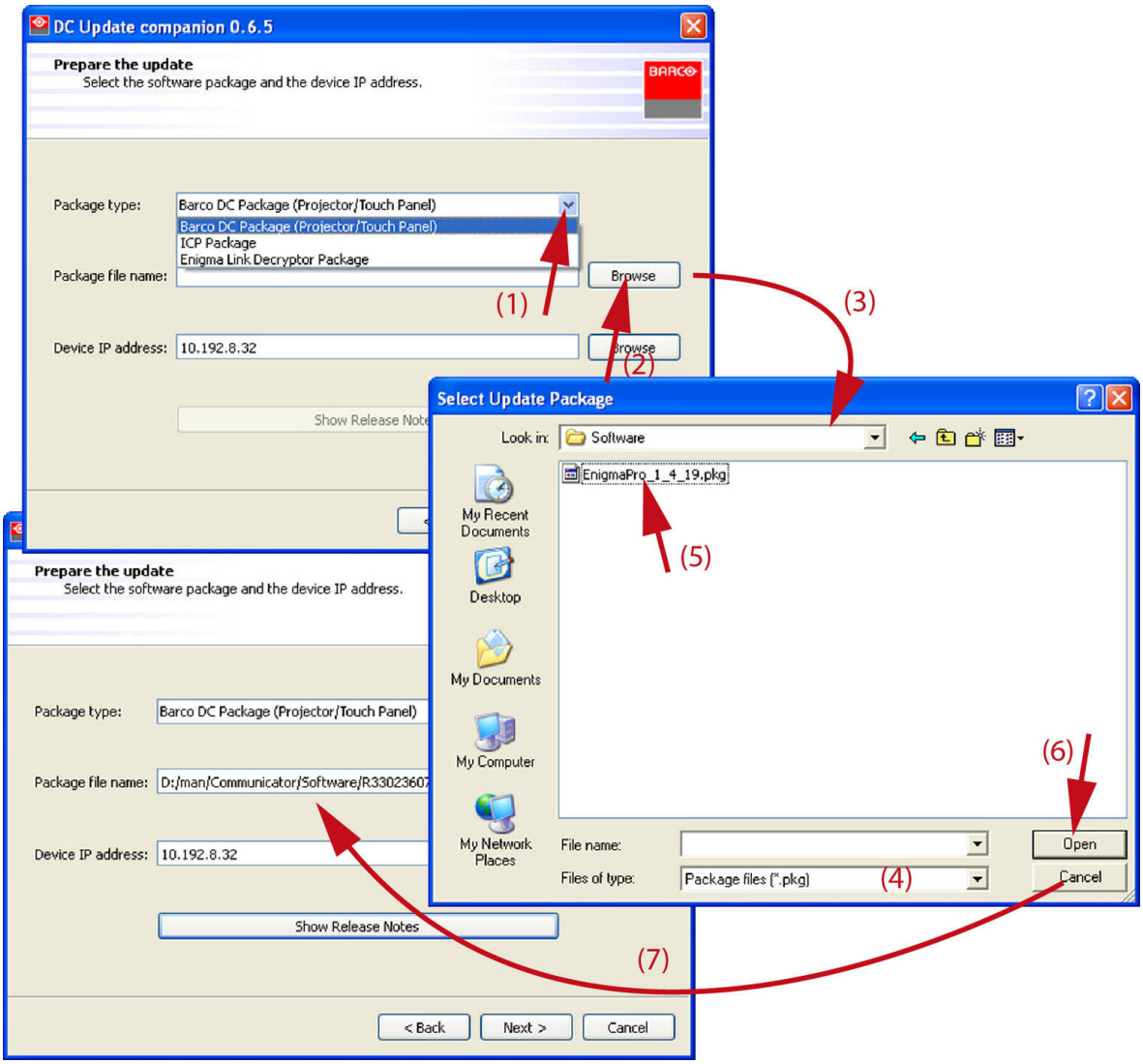


Image 15–4 Package file selection

3. Browse the package file name. Click on **Browse** (2) to open the Browser window (3).
   The correct file type is already filled out (4).
4. Browse for the desired file (5), select the file and click on **Open** (6).
   The Package file name line is filled out (7).
5. To read the release notes, click on **Show Release Notes** (8).

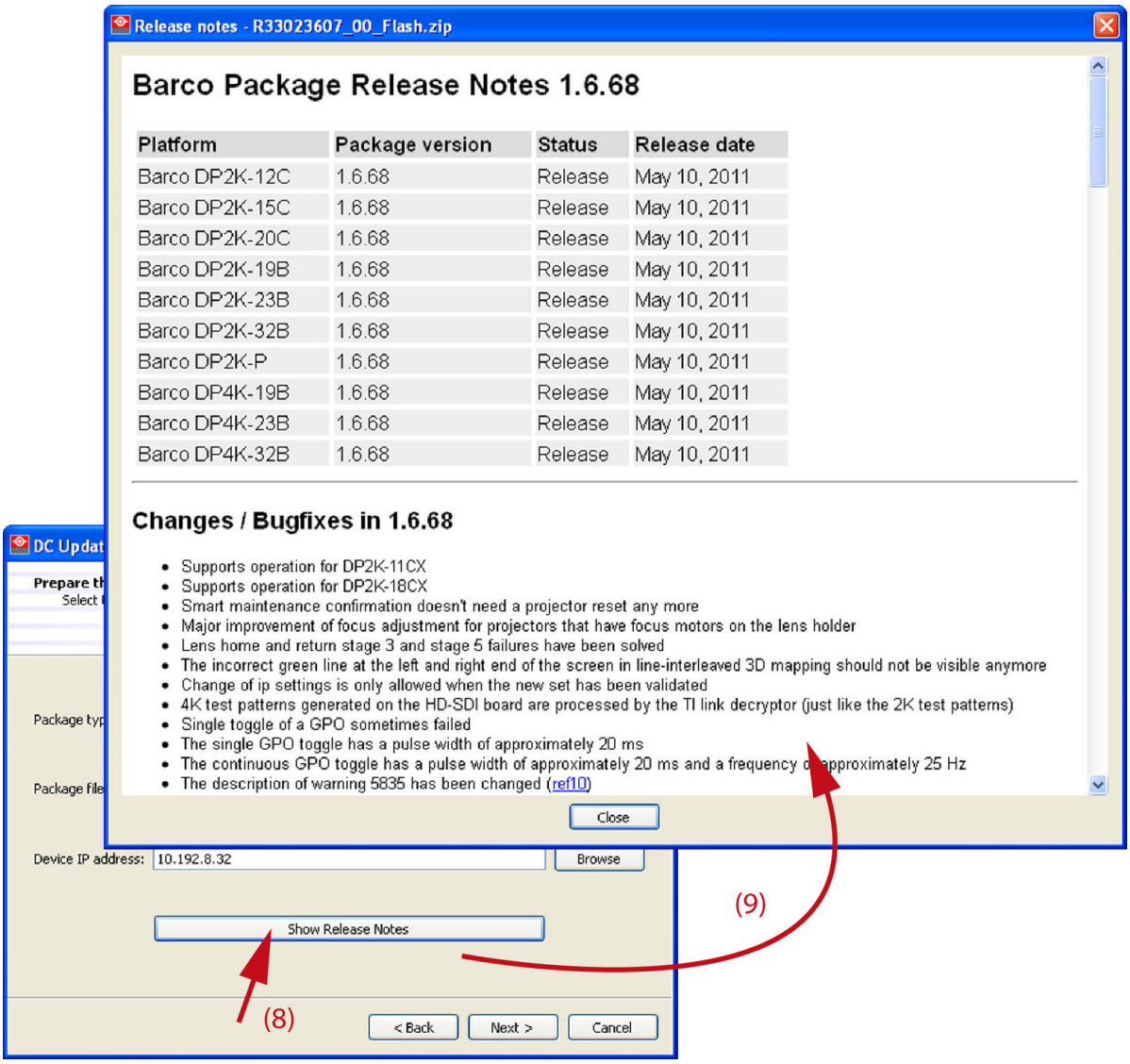


Image 15–5 Barco release notes

6. Enter the device IP address (10) or click on **Browse** to open a device selection window (11).

   *Note:* The IP of the connected projector is already filled out. When using the DC Update Companion as stand alone program, then this field is blank.

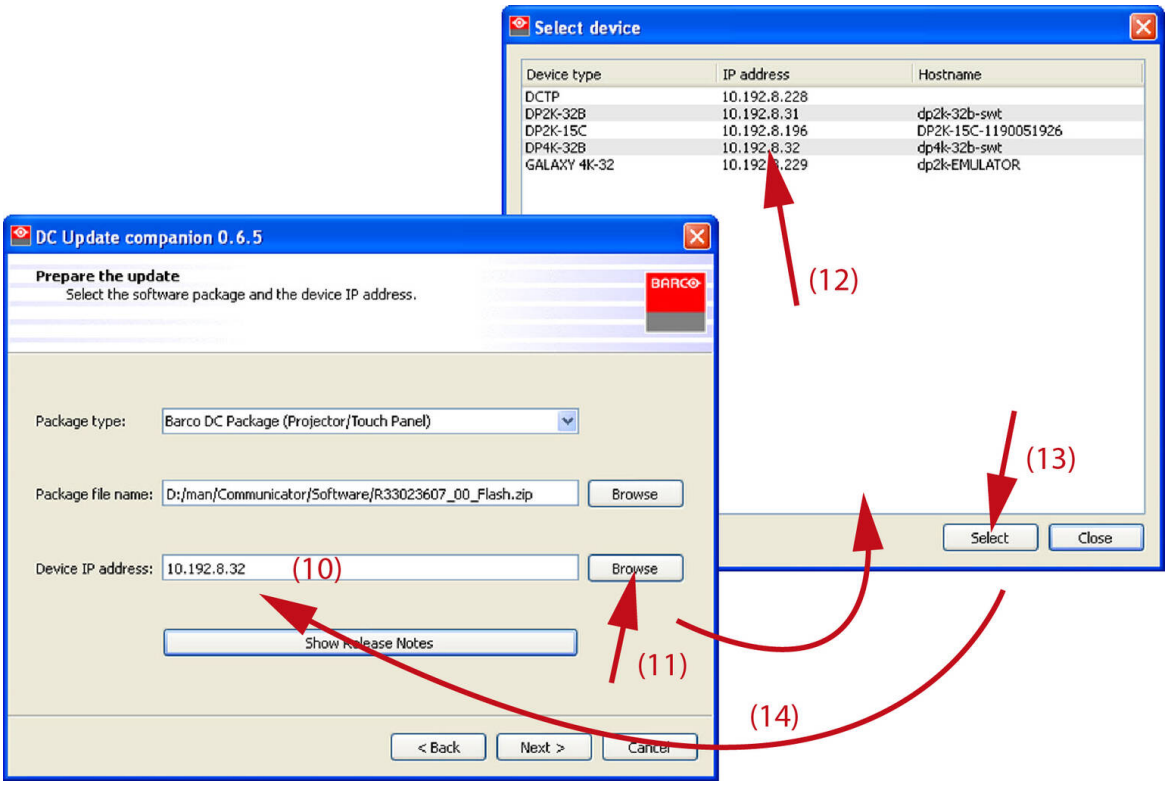


Image 15–6 IP selection

7. Select the desired IP address (12) and click **Select** (13).

   The selected IP address is filled out next to *Device IP address*.

8. Click **Next** to continue.

   The necessary information is gathered.

   The current installed version is shown next to the package version (15).

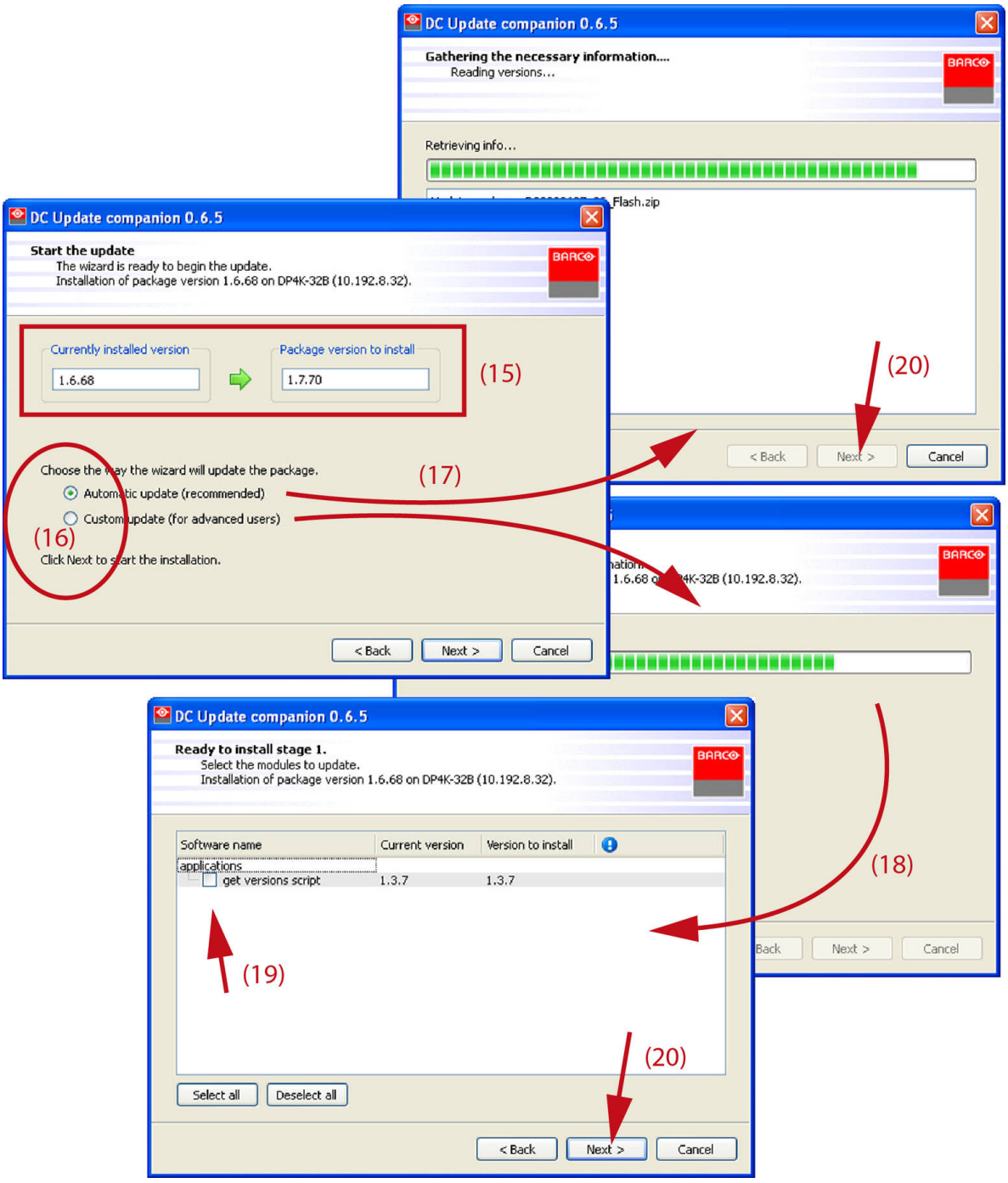


Image 15–7 Projector software update

9. Select the way the wizard will update the package. Check the desired radio button (16).
10. If automatically is selected the wizard gathered the information (17). Then click **Next** to start the update (20).

    If custom update (for advanced users) is selected, the wizard starts collecting the information (17) of the different software modules.
11. Select the modules to update (19) and click **Next** to start the update (20).

The update can take a lot of time. Make sure not to interrupt the power during the update process. At the end, an update status will be displayed.

# 15.3 ICP software upgrade

## About updating ICP board

The ICP board contains 2 slots to store software before this software can be installed. Therefore it is recommended to store the previous version of the software in a location and the current version in the other. When an new update becomes available, overwrite always the oldest version.

These 2 loaded versions make it possible to switch on an easy way between the current version and the previous one.

## How to upgrade

1. Launch the *DC Update Companion* as described in “Software upgrade, launch DC update companion”, page 400.
2. Select package type. Click on the drop down box (1) and select *ICP Package* .

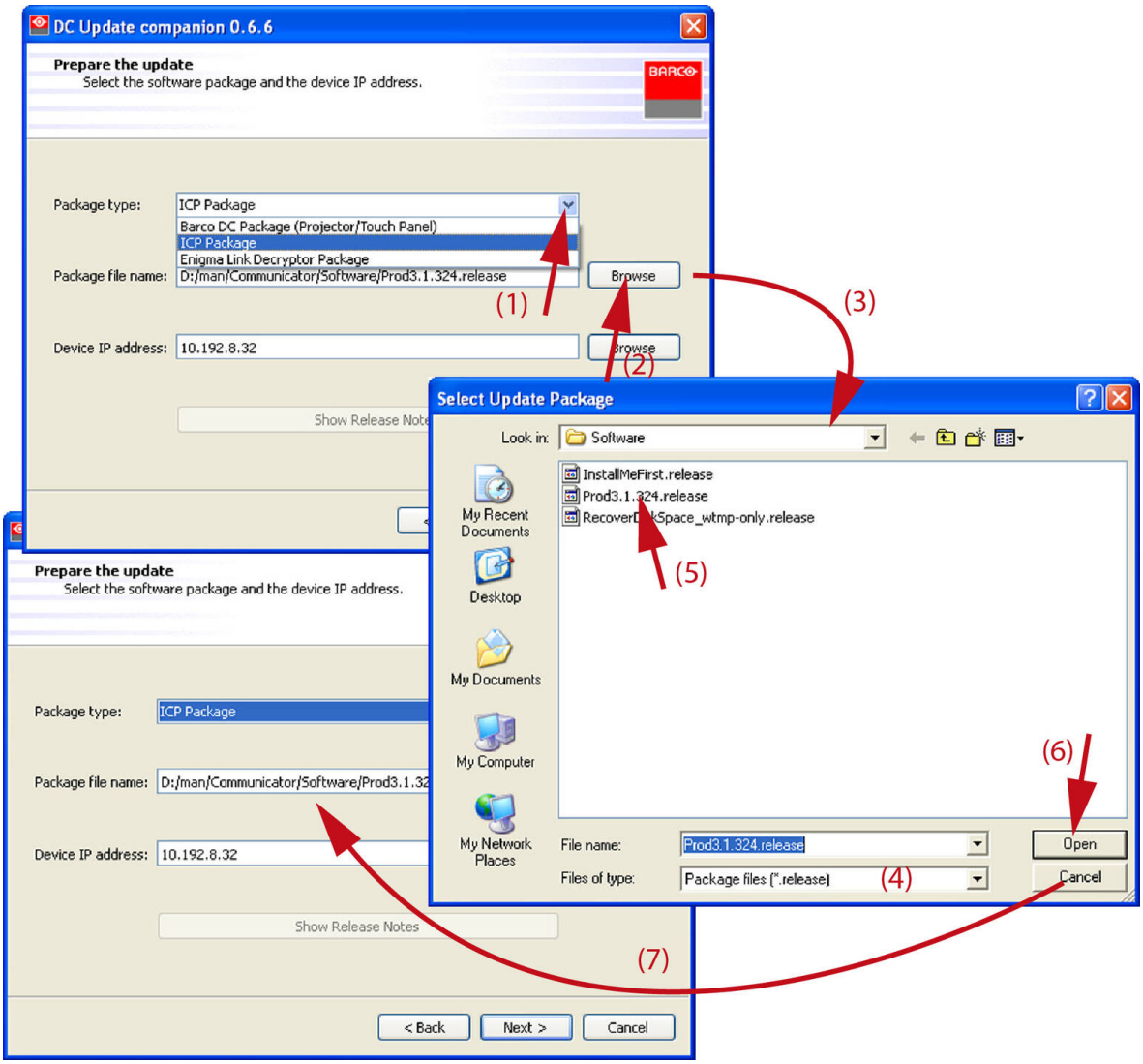


Image 15–8

3. Browse the package file name. Click on **Browse** (2) to open the Browser window (3).

   *Note:* File has extension *release*.

   The correct file type is already filled out (4).
4. Browse for the desired file (5), select the file and click on **Open** (6).

The Package file name line is filled out (7).

5. Enter the device IP address (10) or click on **Browse** to open a device selection window (11).

   *Note:* The IP of the connected projector is already filled out. When using the DC Update Companion as stand alone program, then this field is blank.

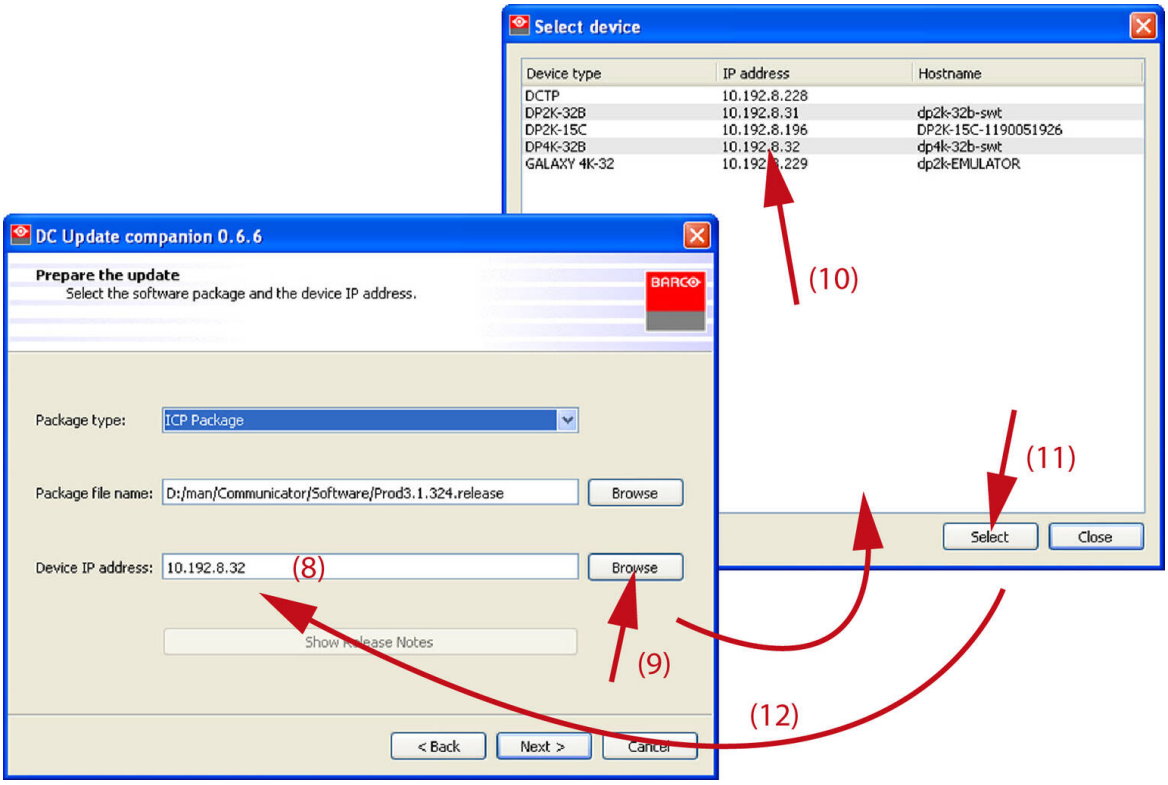


Image 15–9 IP selection

6. Click **Next** to continue.

   The necessary information is gathered.

   The current installed version is shown next to the package version (13).

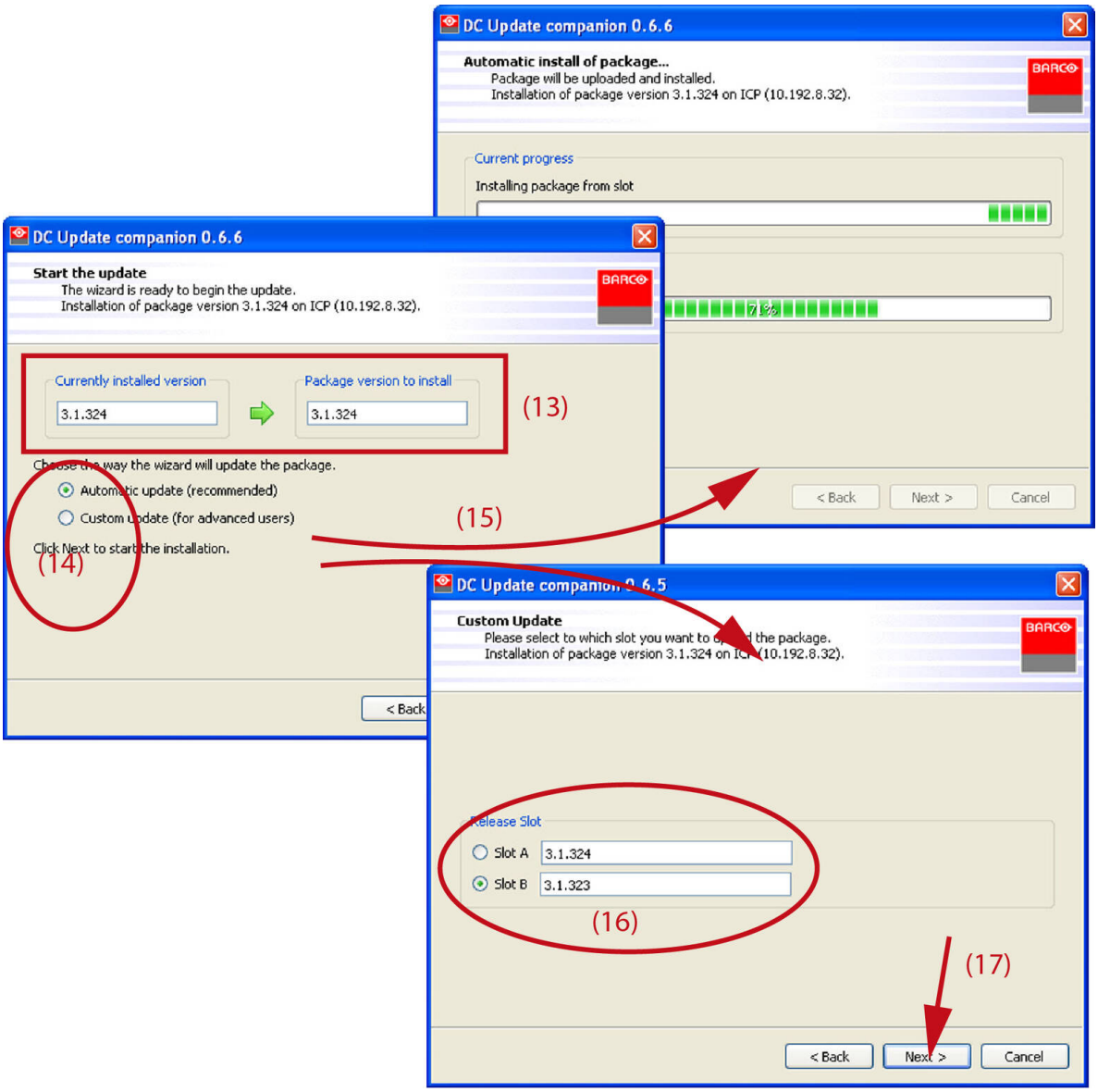


Image 15–10 Load and install software

7. Select the way the wizard will update the package. Check the desired radio button (14).
8. If automatically is selected the wizard will load the software in the oldest slot and install the software immediately (15).

   If custom update (for advanced users) is selected, the wizard displays the selection for slot A or slot B (16). Check the radio button of your choice and press **Next** (17).

   The software will be loaded to the selected slot and will be installed immediately

   When the update is finished, an status window is displayed.

# 15.4 Link decryptor software update

## How to update

1. Launch the *DC Update Companion* as described in “Software upgrade, launch DC update companion”, page 400.
2. Select package type. Click on the drop down box (1) and select *Enigma Link Decryptor Package* .

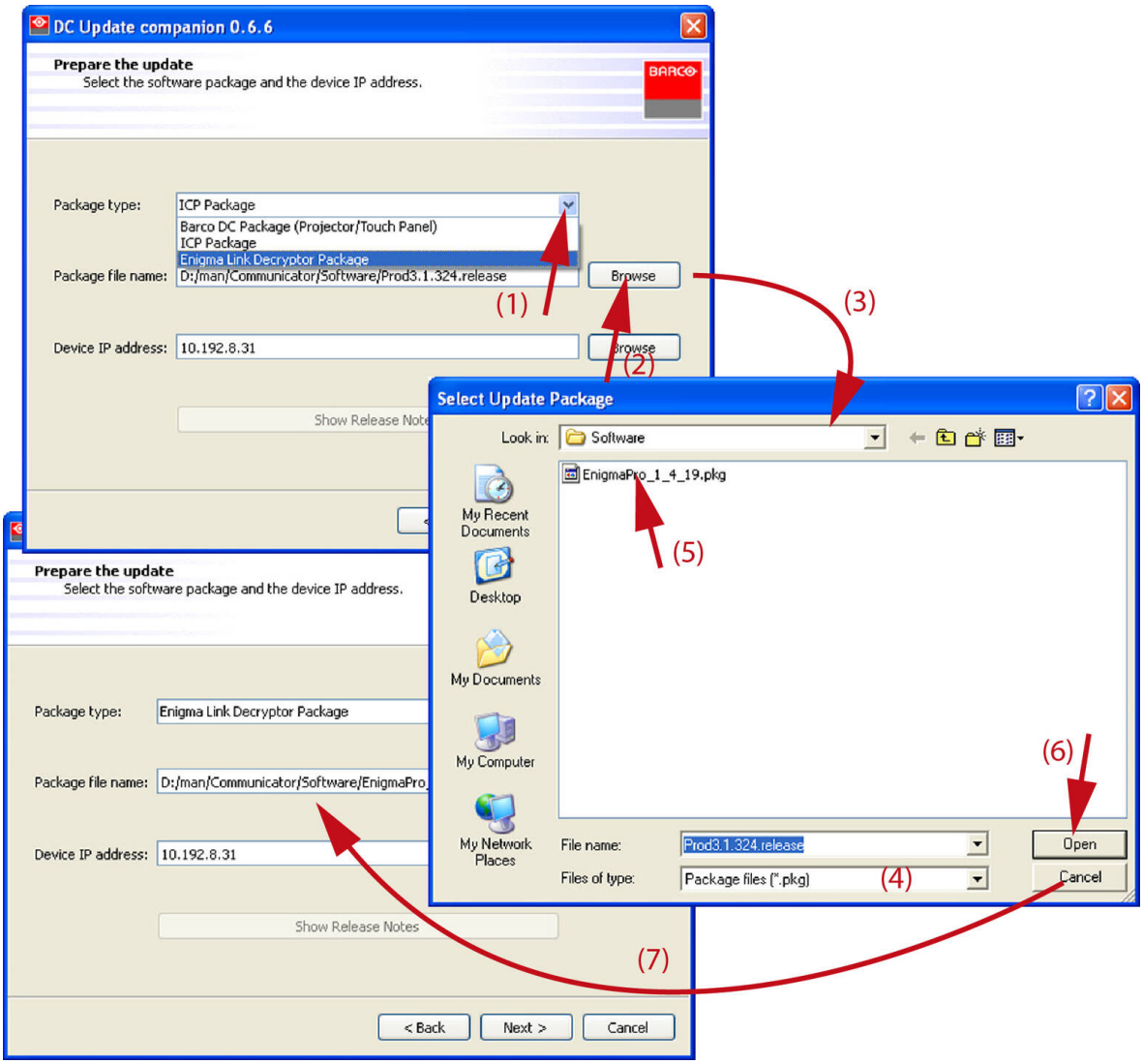


Image 15–11

3. Browse the package file name. Click on **Browse** (2) to open the Browser window (3).

   The correct file type is already filled out (4).
4. Browse for the desired file (5), select the file and click on **Open** (6).

   *Note:* File has extension *pkg*.

   The Package file name line is filled out (7).
5. Enter the device IP address (10) or click on **Browse** to open a device selection window (11).

   *Note:* The IP of the connected projector is already filled out. When using the DC Update Companion as stand alone program, then this field is blank.

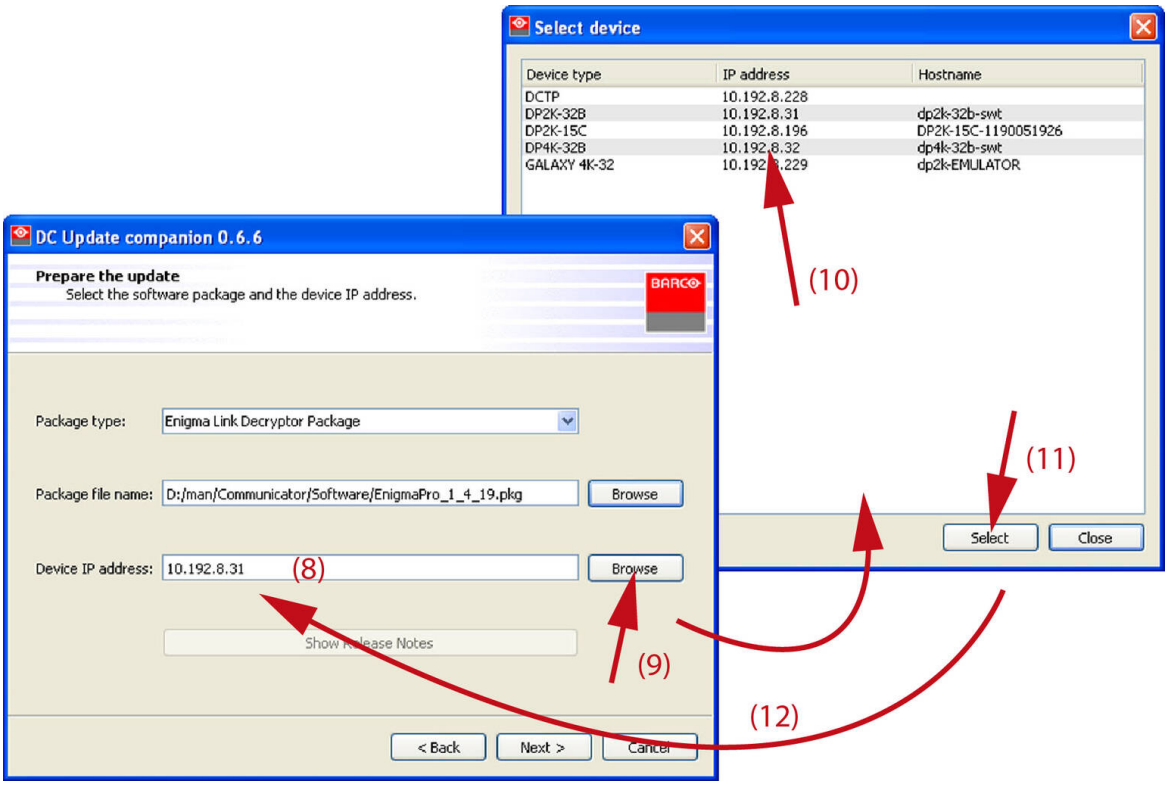


Image 15–12 IP selection

6. Click **Next** to continue.

   The necessary information is gathered.

   The current installed version is shown next to the package version (13).

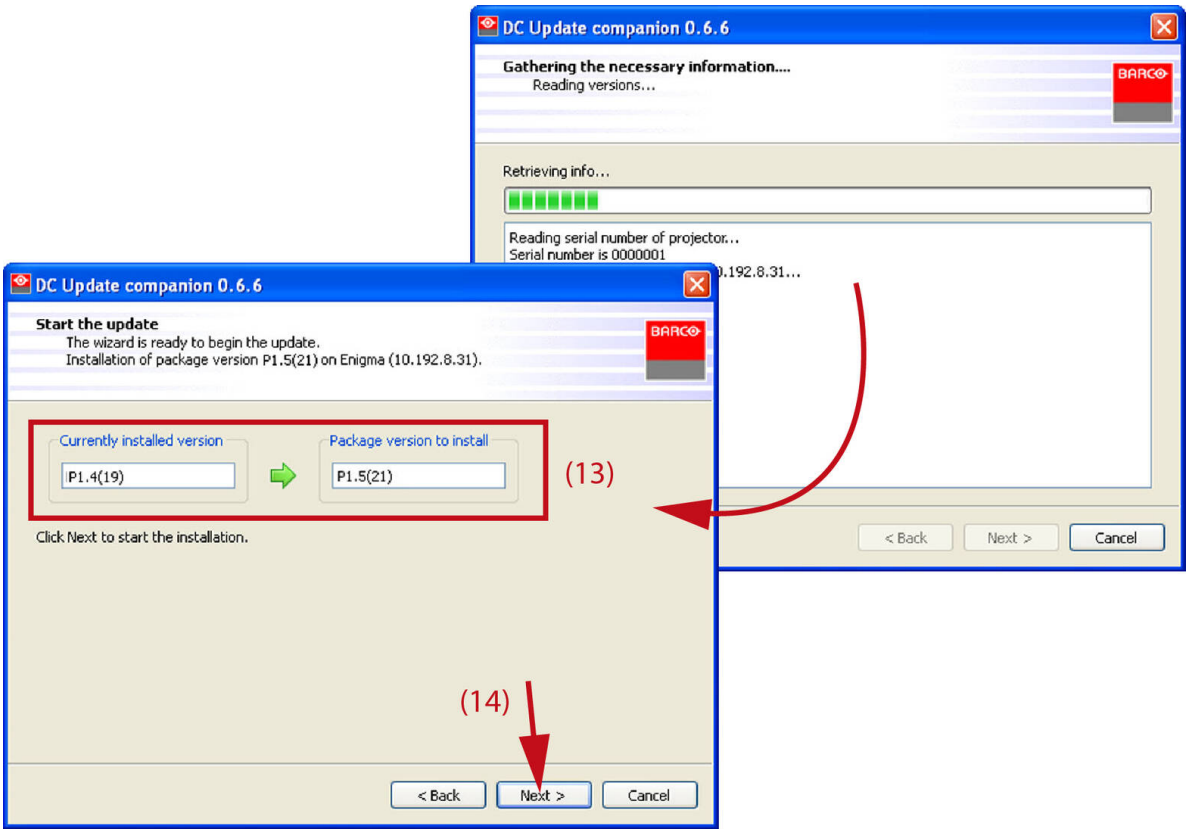


Image 15–13

7. Click **Next** to start the software update (14).

When the update is finished, an status window is displayed.

# 15.5 Update logging

## Installation logging

When the software update is finished, a status window is displayed. This window is almost equal for all possible updates.

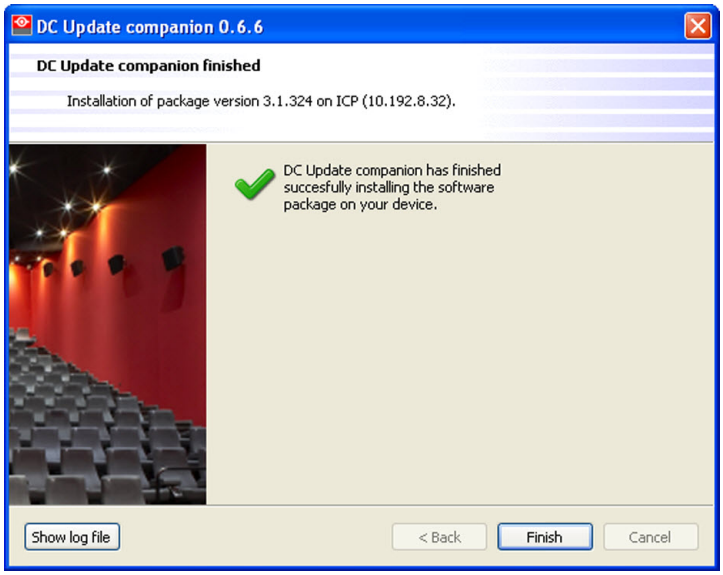


Image 15–14 Status window.

To show the log file, click on **Show log file**.

All information about the update process is logged in this log file.

# Communicator Touch Panel 16

16.1 Communicator Touch Panel.....416
16.2 Installing the Touch Panel interface.....418
16.3 Reposition the Touch Panel interface.....420

# 16.1 Communicator Touch Panel

## Communicator Touch Panel for digital cinema projectors

The Communicator Touch Panel is designed for multi-user command and control. The Communicator enables users to learn quickly and operate efficiently - using an elegant and flexible Touch Panel interface. The interface's commonality means that operators can intuitively use any model in the product line, without restriction, and its user-friendly nature translates directly into a short and enjoyable learning curve.




Image 16–1

## Flexible Touch Panel interface

The Touch Panel interface can be mounted upon a swivel arm which easily fits on top of the DP2K and DP4K B series. One central locking mechanism of the swivel arm allows instant fixation of the Touch Panel interface in any position.

The Touch Panel interface can also be installed further away from the DP2K and DP4K B series. For this purpose an Ethernet cable up to 50 meter can be used to realize a direct data communication between the DP2K and DP4K B series and the Communicator Touch Panel.

The Touch Panel interface can also be connected via a Local Area Network (LAN) in the same way as the DP2K and DP4K B series. In this configuration both devices can communicate with each other as well.

The Touch Panel interface requires a voltage supply +12 VDC and 1,5 ampere. Note that the DP2K and DP4K B series has a 12 VDC output which can be used to power up the Touch Panel interface. Nevertheless, the use of a separate +12 VDC adaptor (1,5 ampere minimum) is required in case the Touch Panel interface is installed more then a few meters away from the DP2K and DP4K B series.

## Parts location of the Touch Panel interface

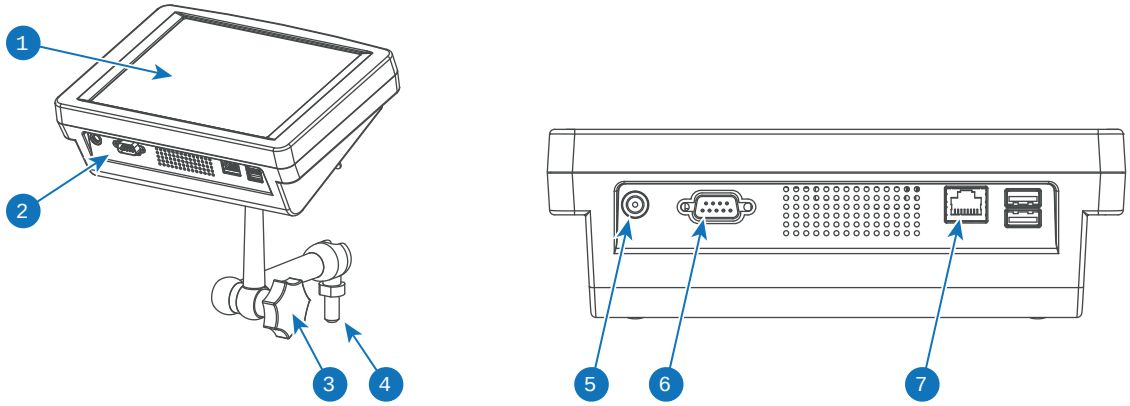


Image 16–2

1 Touch screen
2 Communication panel
3 Knob to operate central swivel clamp
4 Base of swivel arm
5 Power input 12 VDC, 1.5A
6 RS232 port (sub-D)
7 Ethernet port (RJ45)

## Touch Panel power/data customized cable



Image 16–3 Customized cable to connect Touch Panel interface with the Barco projector.

The Communicator Touch Panel has its own user guide which latest version is available on the Barco website.

# 16.2 Installing the Touch Panel interface

## Required tools

- 17mm open end wrench.
- 10mm open end wrench.

## How to install the Touch Panel interface upon the projector?

1. Assemble the mounting plate and the swivel arm together as illustrated. First the nut (N) upon the rod of the mounting plate, then the lock washer (L), and then fasten mounting plate and swivel arm together. When arm is mounted, turn nut (N) against the arm to secure the position.

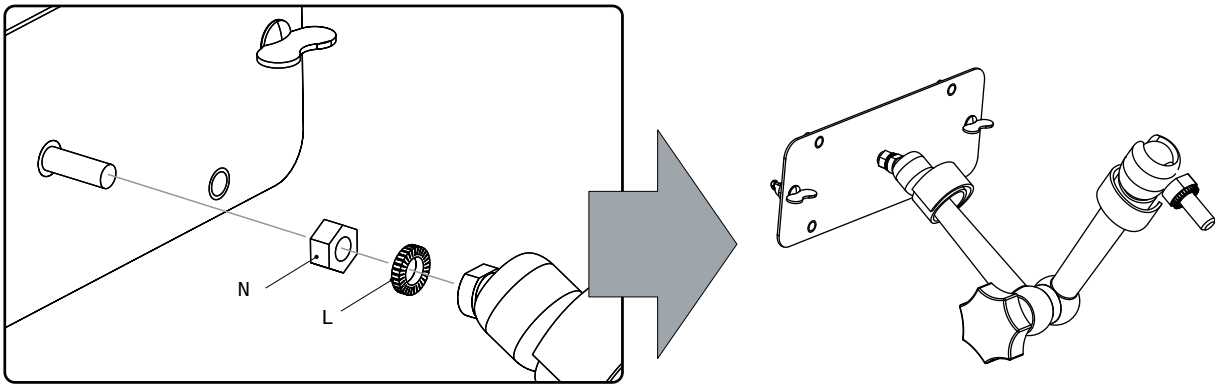


Image 16–4

2. Slide the 10mm spacer (reference 1 ) over the base of the swivel arm and insert he base of the swivel arm into one of the mounting holes at the rear top side of the projector.

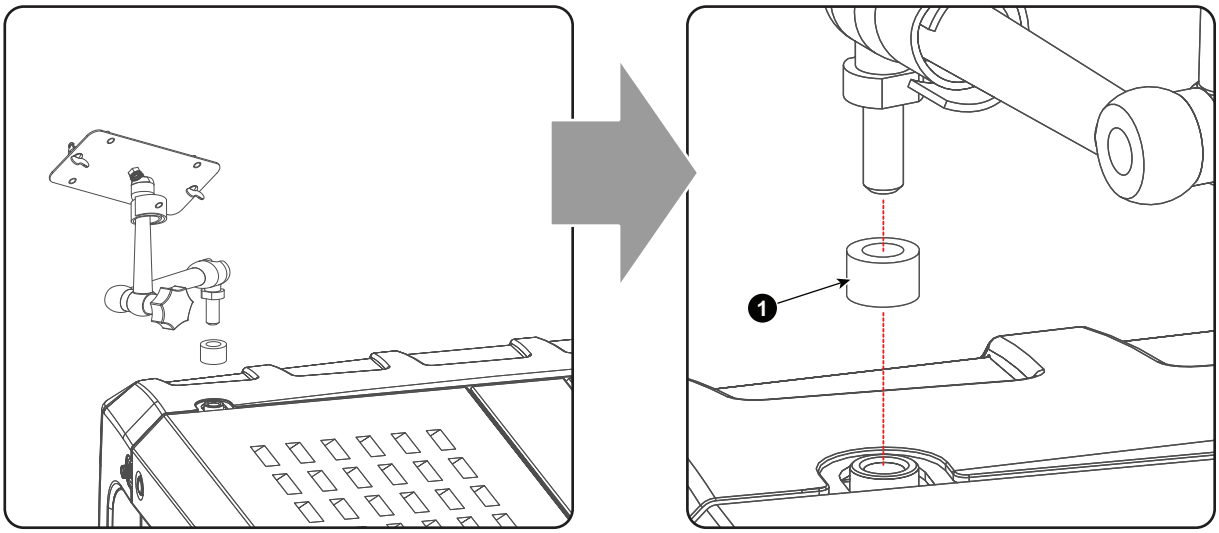


Image 16–5

3. Place the Touch Panel interface upon the mounting plate of the swivel arm and fasten the two wing nuts (W) as illustrated.

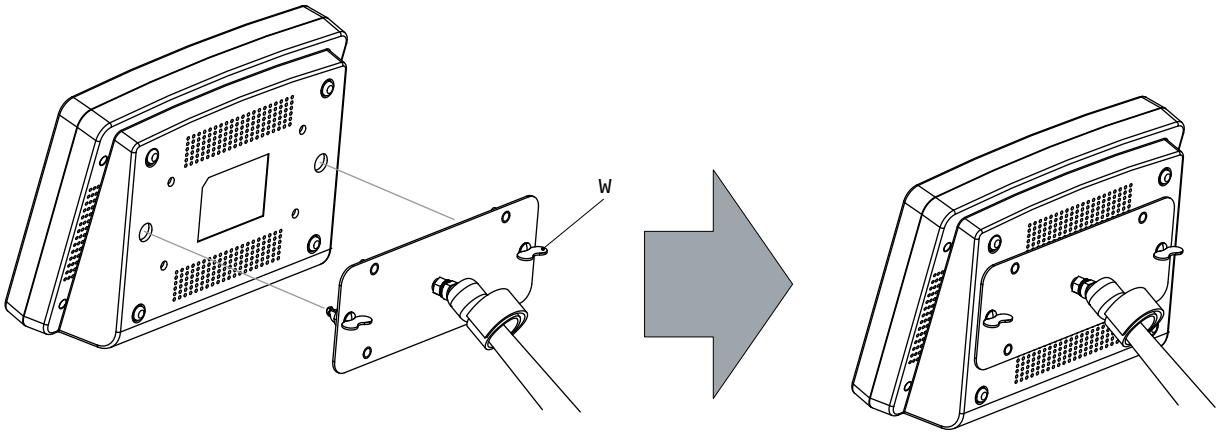


Image 16–6

4. Connect the DC plug, the RJ45 Ethernet plug and the D-SUB plug into their respective sockets on the Touch Panel interface.

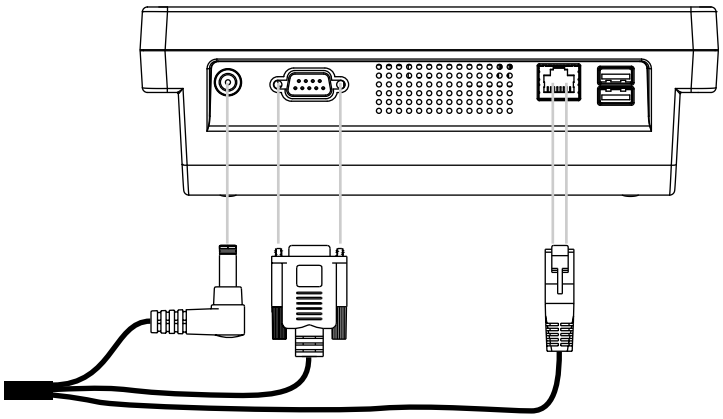

Image 16–7

5. Connect the circular plug of the multi cable with the circular socket at the right side (reference 2) of the projector.

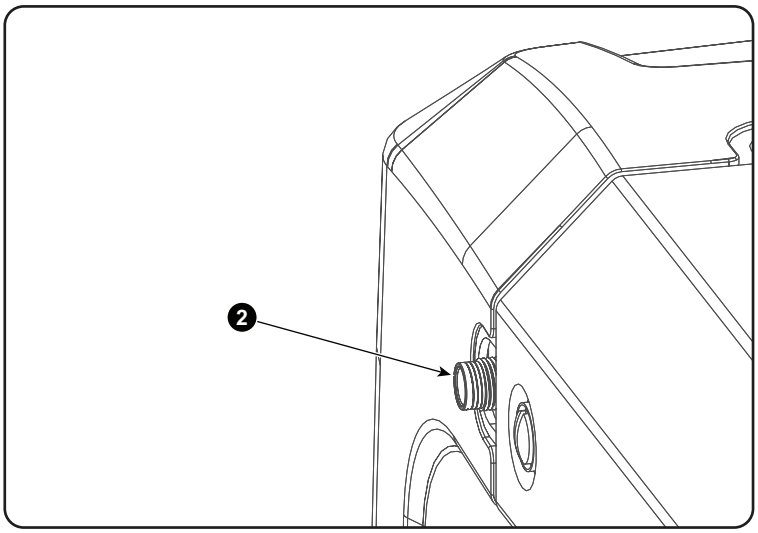


Image 16–8

6. Attach the multi cable to the swivel arm using the two Velcro strips.

# 16.3 Reposition the Touch Panel interface

### How to reposition the Touch Panel interface?

1. Hold the Touch Panel interface.
2. Release the central swivel clamp by turning the big black knob counterclockwise.
3. Move the Touch Panel interface into the desired position.
4. Fasten the central swivel clamp by turning the big black knob clockwise.

**CAUTION:** Never release the central swivel lock without supporting the Touch Panel interface.

# Fan replacement procedures 17

17.1 Replacement of the Card Cage fans ..... 422
17.2 Replacement of the Light Processor fan ..... 424
17.3 Replacement of the Formatter fan(s) ..... 427
17.4 Replacement of the Heat Exchanger fans ..... 429
17.5 Replacement of the SPG/Cold Mirror fan ..... 430
17.6 Replacement of the Anode fan ..... 433
17.7 Replacement of the Anode fan with plastic housing (MK2) ..... 435
17.8 Replacement of the Cathode fan ..... 438
17.9 Replacement of the ICP fan ..... 440

## About this chapter

This chapter contains the replacement procedures of all fans in the projector. Note that the fans of the Lamp Power Supply (LPS) unit can not be replaced. The LPS unit has to be replaced as a whole.

# 17.1 Replacement of the Card Cage fans

## Where are the Card Cage fans located?

The four Card Cage fans are located at the right side of the Card Cage, behind the front dust filter of the projector. The upper two fans ventilate the compartment of the Card Cage boards. The two lower fans ventilate the SMPS compartment at the base of the Card Cage.

This procedure assumes that the projector input cover, front cover and front dust filter are already removed.

## Required tools

3mm Allen wrench.

## How to replace the fans of the Card Cage boards compartment?

1. Disconnect the wire unit (reference 1 or 3 of Image 17–1) of the fan (reference 2 or 4 of Image 17–1) which you want to replace.

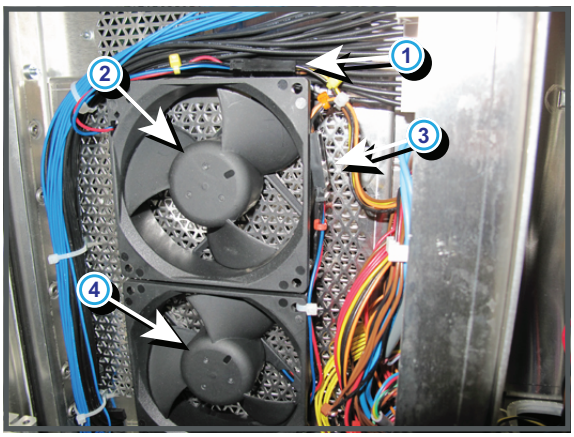


Image 17–1

2. Replace the fan as illustrated. Use a 3mm Allen wrench to loosen/fasten the four screws (reference 1 Image 17–2) of the fan. Ensure that the airflow of the fan is towards the Card Cage compartment.

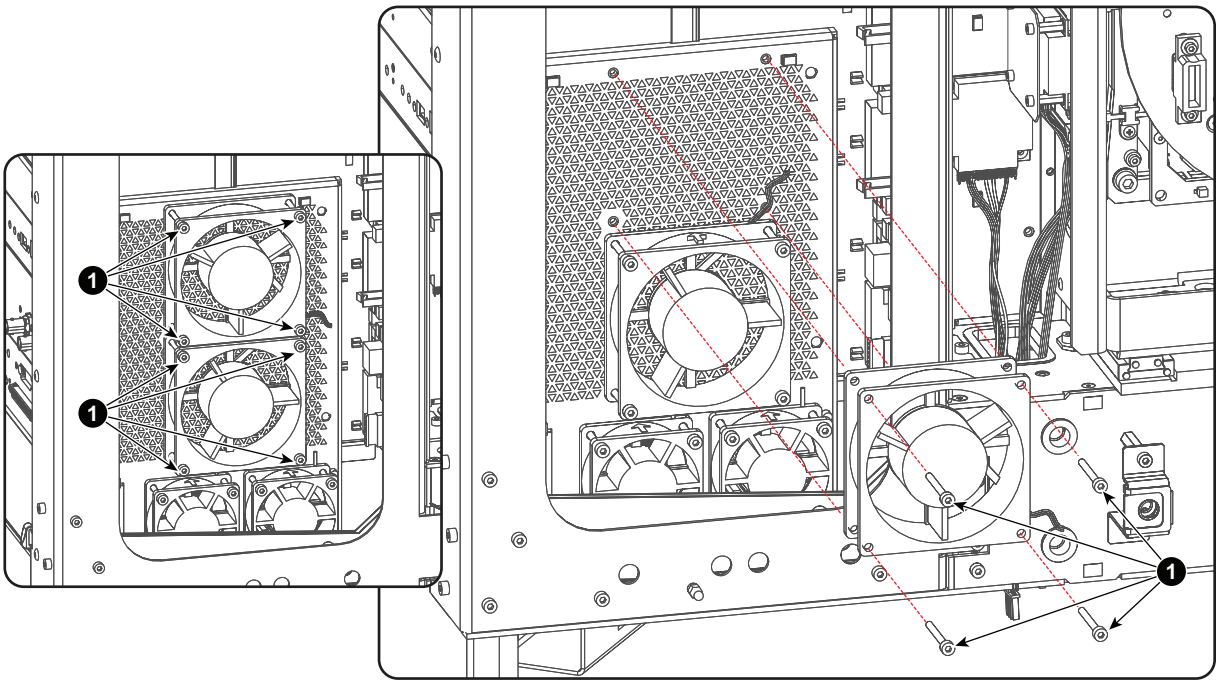


Image 17–2

3. Reconnect the wire unit of the fan.

   *Note:* The colors of the wire unit of the upper fan are brown/orange/black.
   The colors of the wire unit of the lower fan are brown/yellow/black.

## How to replace the fans of the SMPS compartment?

1. Disconnect the wire unit (reference 1 or 3 of Image 17–3) of the fan (reference 2 or 4 of Image 17–3) which you want to replace.

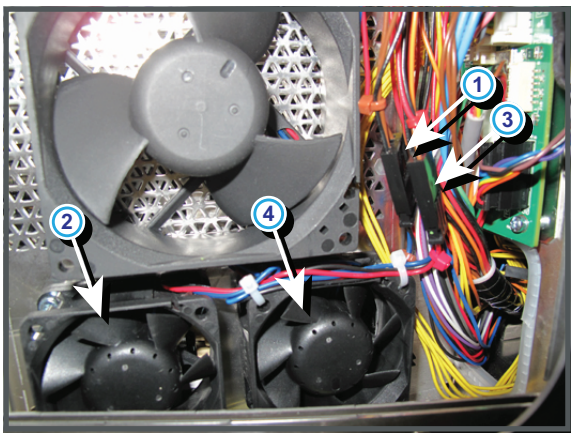


Image 17–3

2. Replace the fan as illustrated. Use a 3mm Allen wrench to loosen/fasten the four screws (reference 3 Image 17–4) of the fan. Note that the bottom screws of the fans are accessible via the holes (reference 1 and 2 Image 17–4) in the sheet metal. Ensure that the airflow of the fan is towards the SMPS compartment.

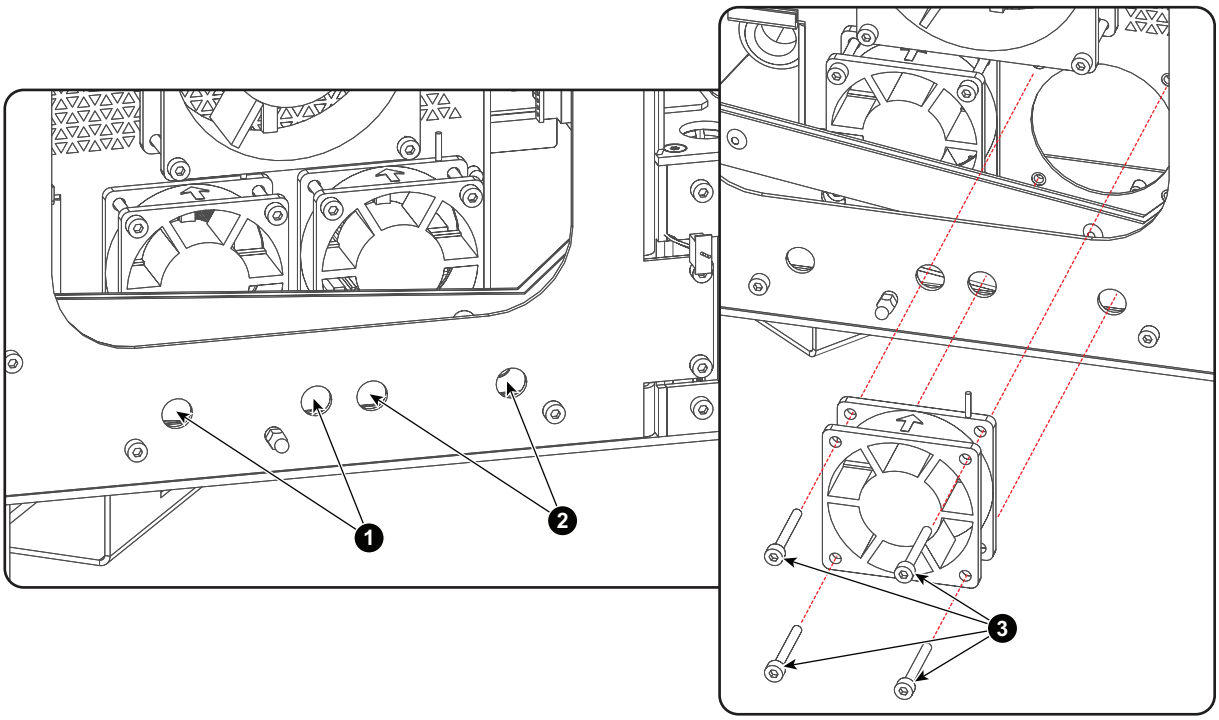


Image 17–4

3. Reconnect the wire unit of the fan.

   *Note:* The colors of the wire unit of the left fan are brown/brown/black.
   The colors of the wire unit of the right fan are brown/red/black.

# 17.2 Replacement of the Light Processor fan

## Where is the fan of the Light Processor located?

The fan which ventilating the compartment of the Light Processor is located at the rear side of the Card Cage. This fan is accessible through the Card Cage.

This procedure assumes that the projector input cover is already removed.

## Required tools

- 3mm Allen wrench.
- 2.5mm Allen wrench.

## How to replace the Light Processor fan?

1. Remove the Card Cage top cover. Take into account that the top cover is captured by four self clinching tie mounts (reference 2 Image 17–5). Use a 3mm Allen wrench to loosen the two screws (reference 1 Image 17–5) of the Card Cage top cover.

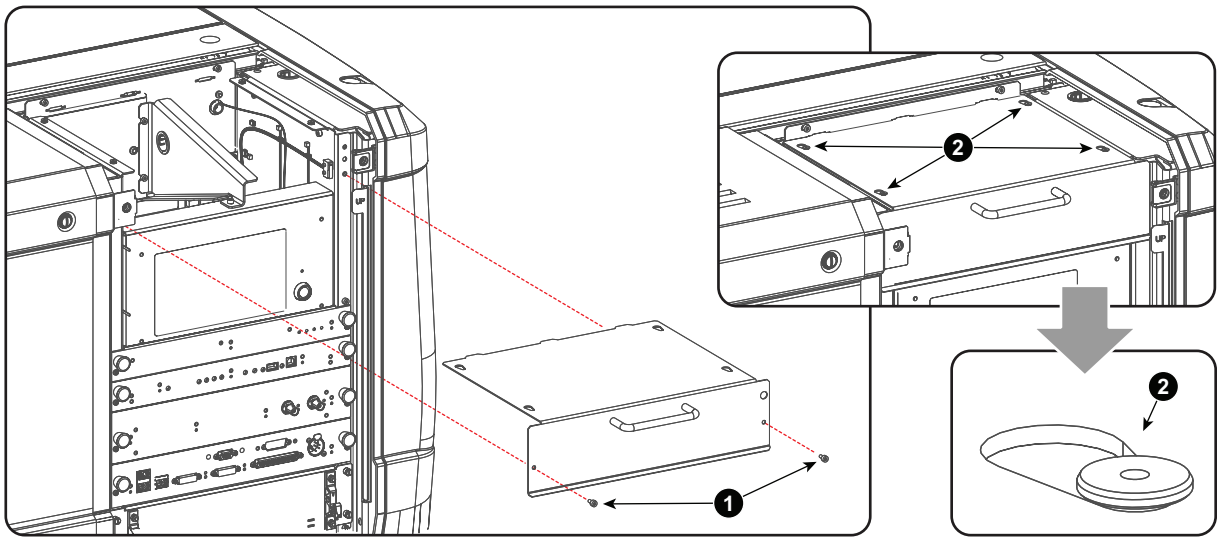


Image 17–5

2. Disconnect the wire unit (reference 2 Image 17–6) of the fan (reference 1 Image 17–6) which is ventilating the compartment of the Light Processor.

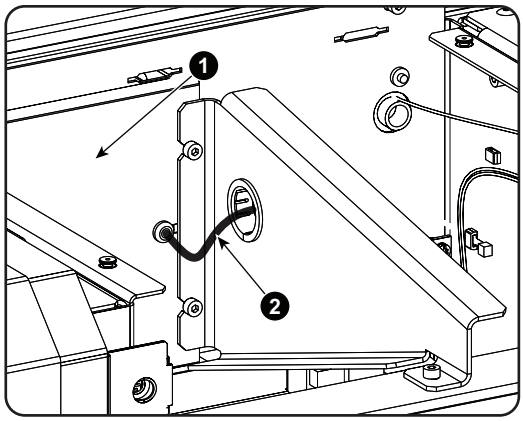


Image 17–6

3. Remove the Card Cage top bracket as illustrated. Use a 3 mm Allen wrench to loosen the two screws at the back a few turns (reference 1 Image 17–7) and to remove the screw at the front (reference 2 Image 17–7).

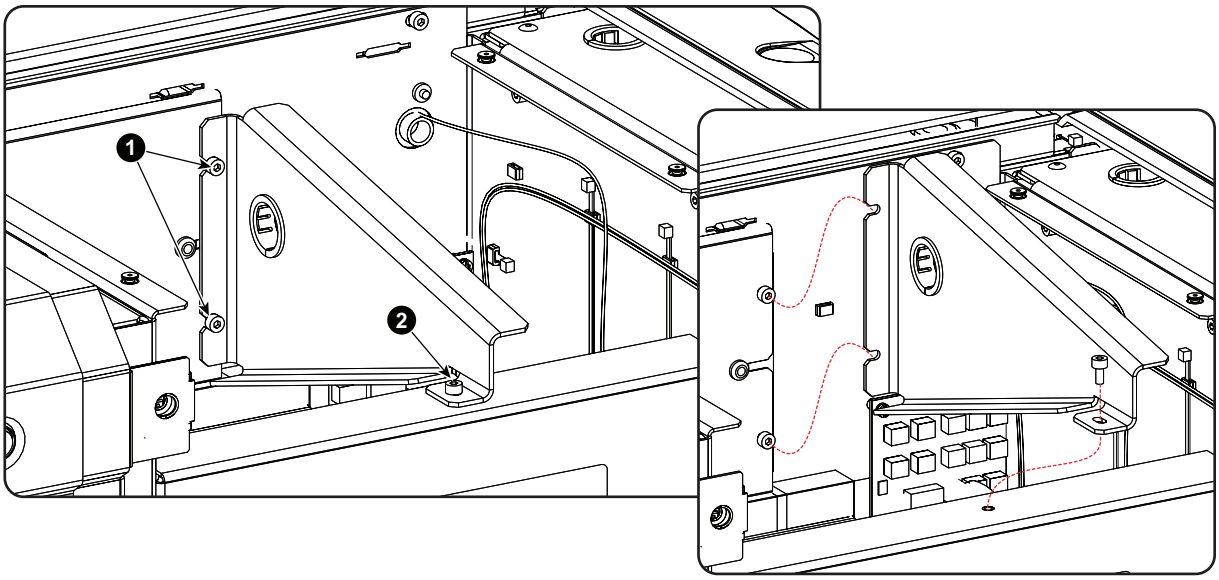


Image 17–7

4. Remove the housing top plate as illustrated. Use a 3mm Allen wrench to loosen the screw (reference 1 Image 17–8).

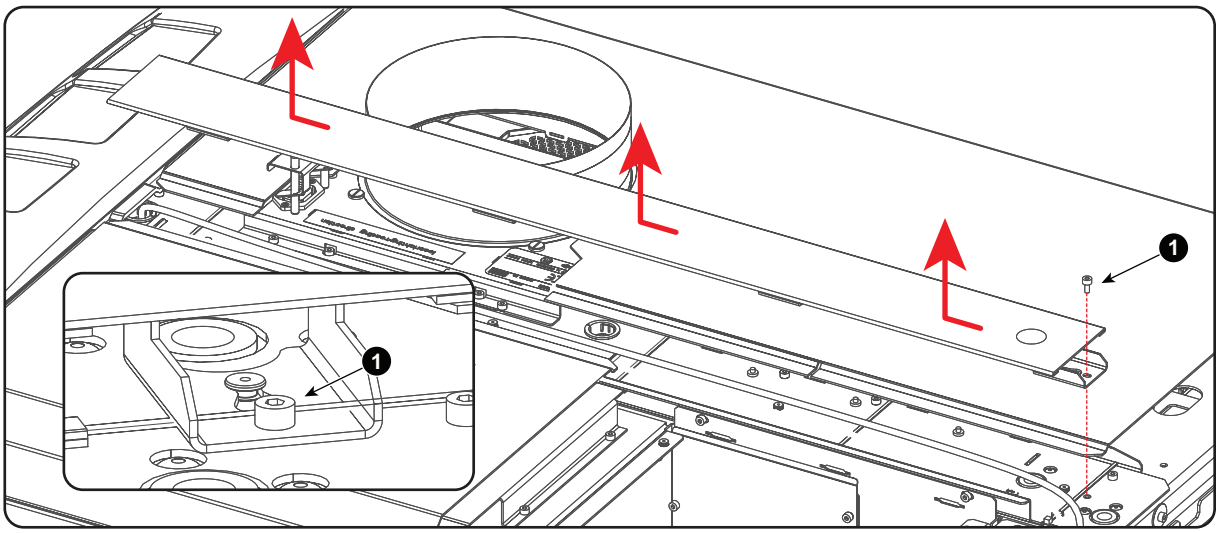


Image 17–8

5. Remove the fan assembly as illustrated. Use a 3mm Allen wrench to loosen the two screws at the top (reference 1 Image 17–9) and the three screws at the front (reference 2 Image 17–9) of the fan assembly.

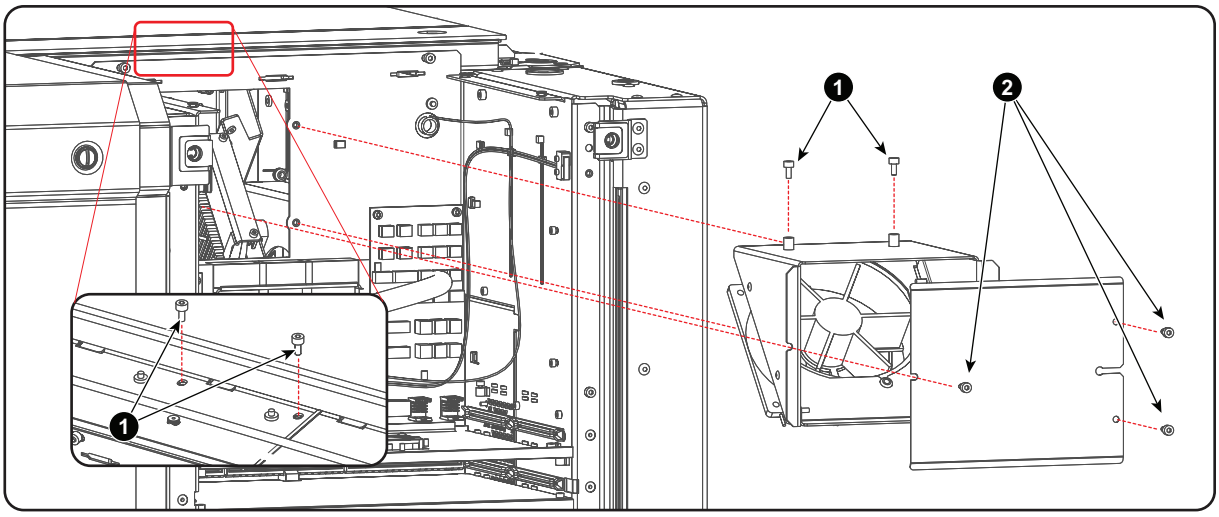


Image 17–9

6. Remove the fan from the assembly and install a new fan. Use a 3mm Allen wrench to loosen the four screws (reference 1 Image 17–10). Ensure that the airflow of the fan is towards the Light Processor compartment.

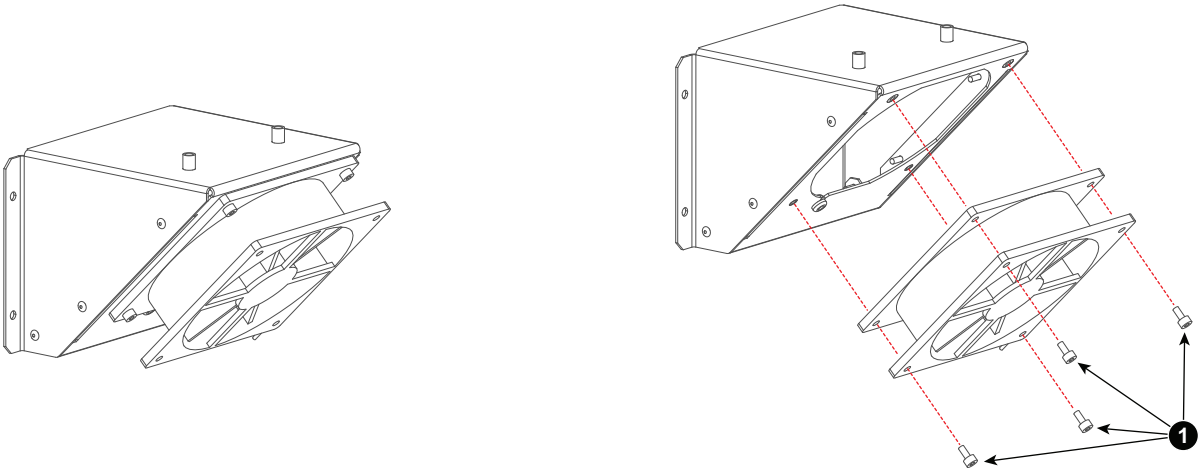


Image 17–10

7. Reinstall the fan assembly in the projector. (Image 17–9)
8. Reinstall the housing top plate. (Image 17–8).
9. Reinstall the Card Cage top bracket. (Image 17–7)
10. Reconnect the wire unit of the fan. Ensure to guide the wire unit through the opening in the bracket. (Image 17–6) of the fan (reference 1
11. Reinstall the Card Cage top cover. Take into account that the top cover is captured by four self clinching tie mounts (reference 2 Image 17–5).

# 17.3 Replacement of the Formatter fan(s)

To replace the Formatter fan(s) the Light processor must be removed from the projector. This procedure assumes that the Light Processor is already removed.

## Required tools

3mm Allen wrench.

## How to replace the Formatter fan(s) from the Light Processor?

1. Disconnect the three Formatter fans from the Light Processor wiring.
2. Remove the Formatter fan assembly from the Light Processor. Use a 3mm Allen wrench to loosen the 8 screws (reference 1 Image 17–11) as illustrated.

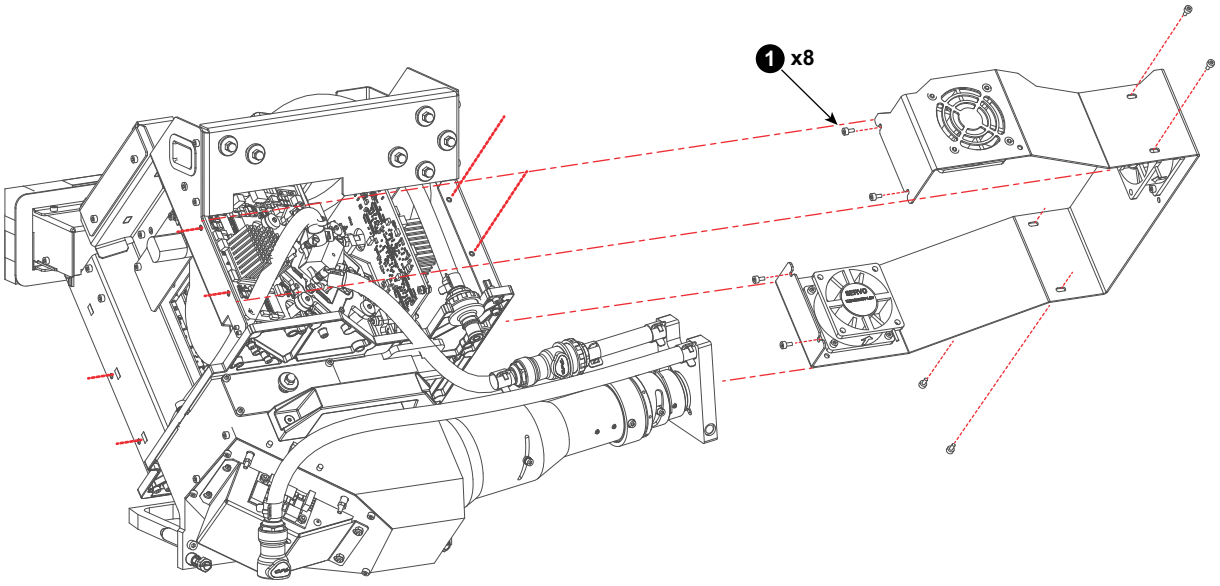


Image 17–11

3. Replace the fan(s). Use a 3mm Allen wrench to loosen/fasten the four screws (reference 1 Image 17–12) of the fan.

*Caution:* The air flow of the fan must be towards the Formatter board.

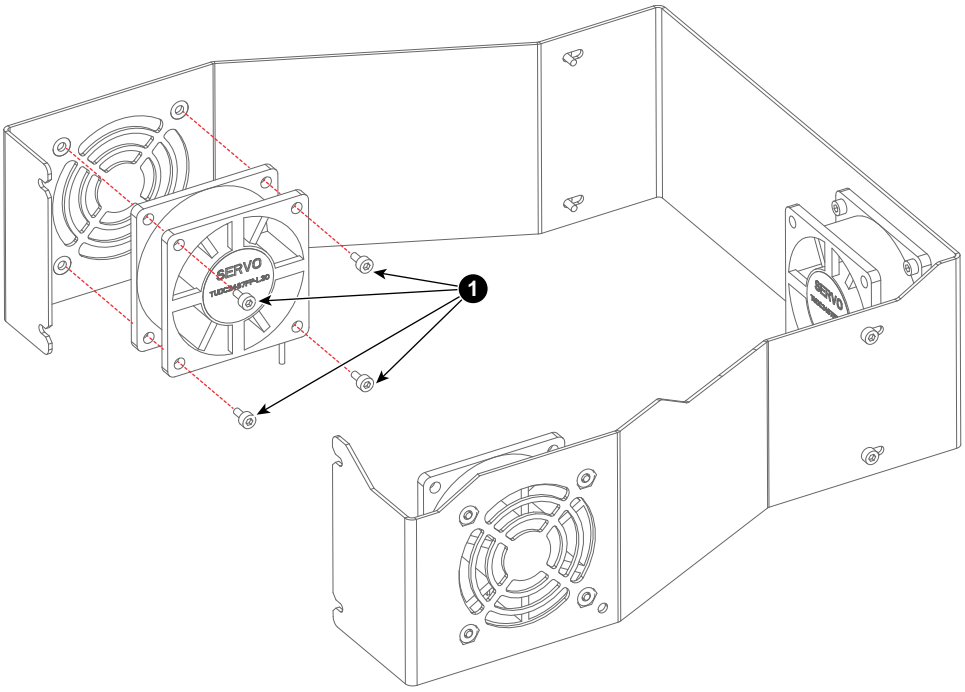


Image 17–12

4. Reinstall the Formatter fan assembly back on the Light Processor.
5. Reconnect the all three fans with the wiring of the Light Processor.

# 17.4 Replacement of the Heat Exchanger fans

## Where are the Heat Exchanger fans located?

The two Heat Exchanger fans are located at the bottom of the Liquid Cooling assembly. To access these fans the Liquid Cooling assembly has to be removed from the projector first.

This procedure assumes that the Liquid Cooling assembly is already removed.

## Required tools

3mm Allen wrench.

## How to replace the fans of the Card Cage boards compartment?

1. Replace the fan as illustrated. Use a 3mm Allen wrench to loosen/fasten the four screws (reference 1 Image 17–13) of the fan. Ensure that the air flow of the fan is upwards oriented.

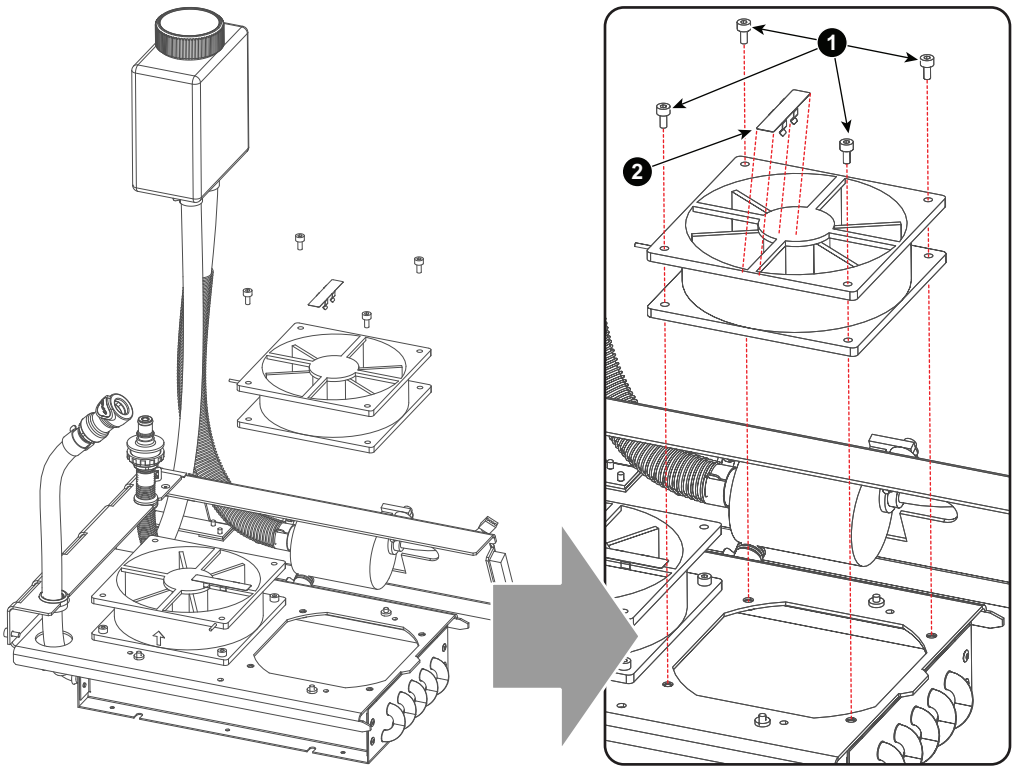


Image 17–13

*Note:* The colors of the wire unit of the front fan are red/red/black.
The colors of the wire unit of the back fan are red/orange/black.

2. Reinstall the small protection plate (reference 2 Image 17–13) for the wire unit. This small protection plate has to be reused.

# 17.5 Replacement of the SPG/Cold Mirror fan

## About the SPG fan and Cold Mirror fan

The fan for the SPG ventilation and the fan for the Cold Mirror ventilation are mounted next to each other on the same assembly. The replacement procedure is the same for both fans. This procedure illustrates how the SPG fan is replaced.

To access the SPG/Cold Mirror fan assembly the projector left cover has to be removed. This procedure assumes that the projector left cover is already removed.

## Required tools

3mm Allen wrench.

## How to replace the SPG/Cold Mirror fan?

1. Disconnect the wire unit of the SPG fan and the wire unit of the Cold Mirror fan (reference 1 and 2 Image 17–14).

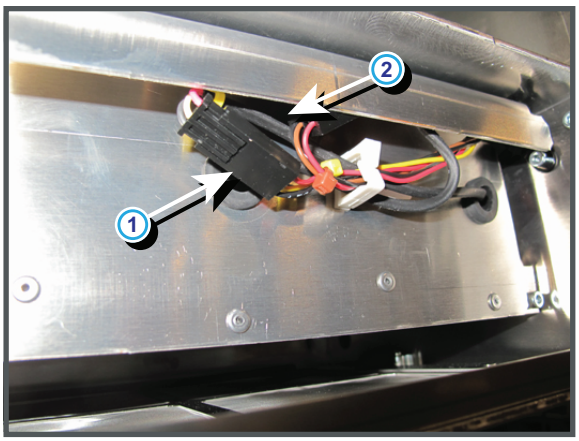


Image 17–14

2. Remove the fan assembly from the projector. Use a 3mm Allen wrench for loosening the two screws (reference 1 Image 17–15) as illustrated.

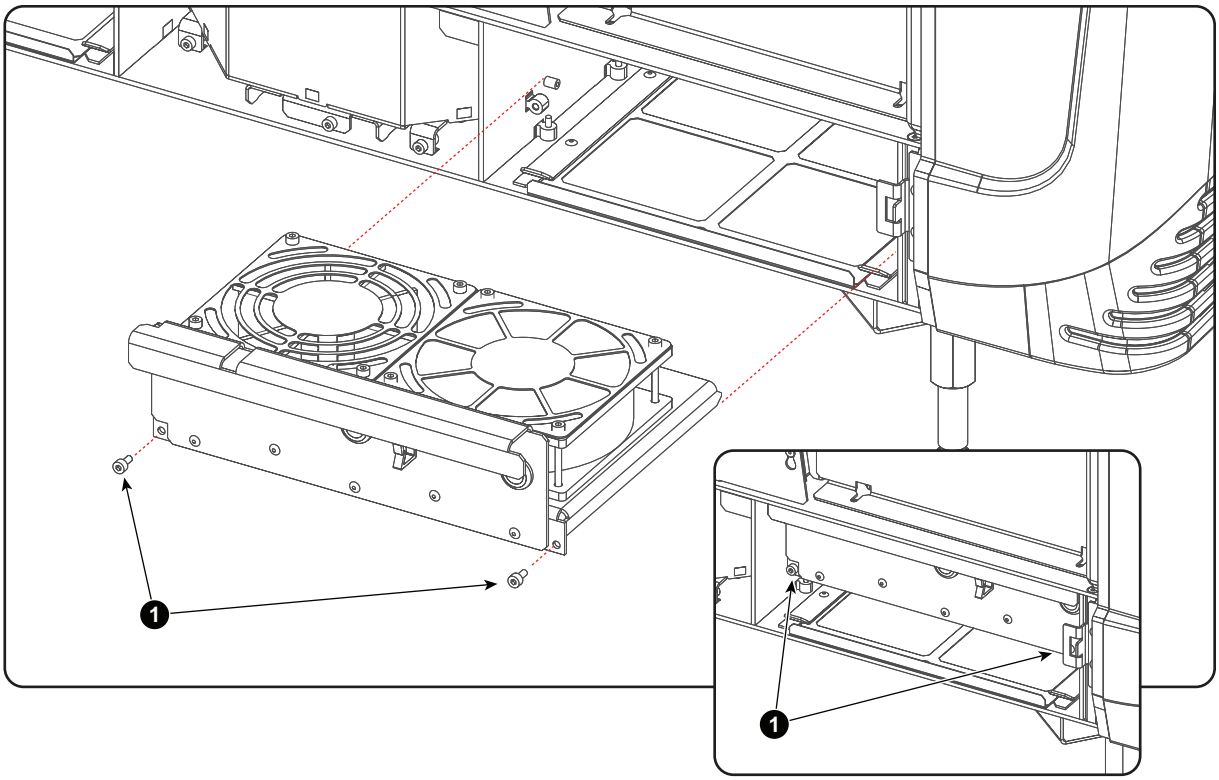


Image 17–15

3. Loosen the four screws of the fan that has to be replaced. SPG fan: screws with reference 3; Cold Mirror fan: Screws with reference 4. Use a 3mm Allen wrench.

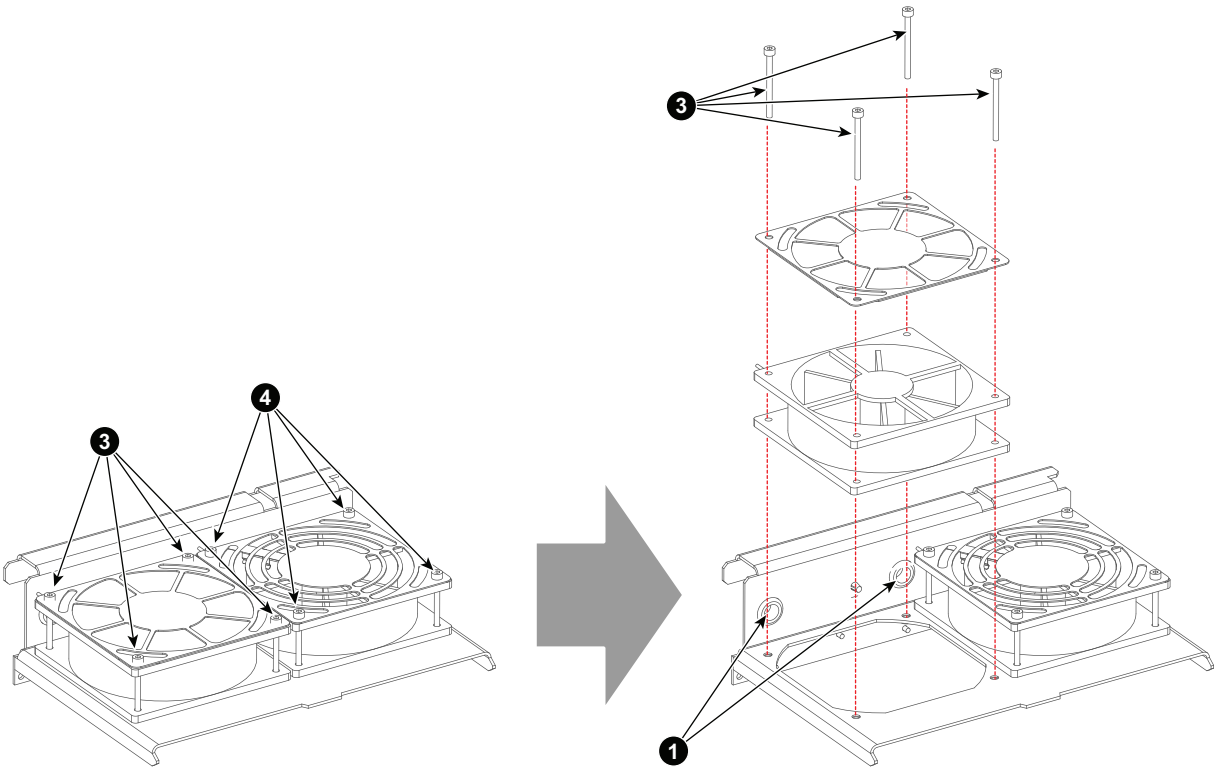


Image 17–16

4. Install a new fan. Make sure that the air flow of the fan is upwards oriented. Guide the wire unit of the fan through the opening at the front of the assembly (reference 1 Image 17–16).

5. Reinstall the fan assembly in the projector (see Image 17–15).

6. Reconnect both fans. Respect the colors of the wire units. (see Image 17–14).

   *Note:* The colors of the wire unit of the SPG fan are red/yellow/black.
   The colors of the wire unit of the Cold Mirror fan are red/brown/black.

# 17.6 Replacement of the Anode fan

To access the Anode fan assembly the projector left cover has to be removed. This procedure assumes that the projector left cover is already removed.

## Required tools

- 3mm Allen wrench.
- 2.5mm Allen wrench.
- Set of pliers.

## How to replace the Anode fan?

1. Disconnect the wire unit (reference 1 Image 17–17) of the Anode fan.

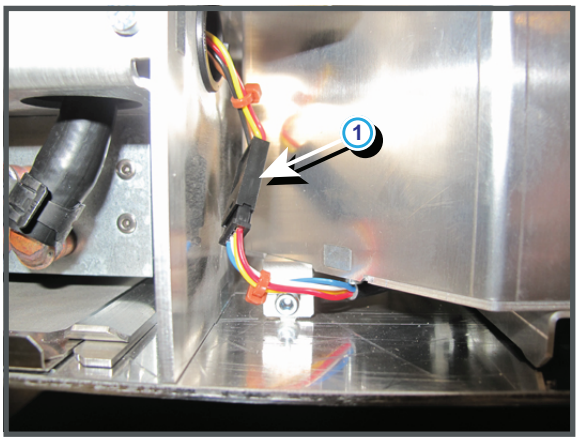


Image 17–17

2. Remove the Anode fan assembly from the projector. Use a 3mm Allen wrench for loosening the two screws (reference 1 Image 17–18) of the assembly as illustrated.

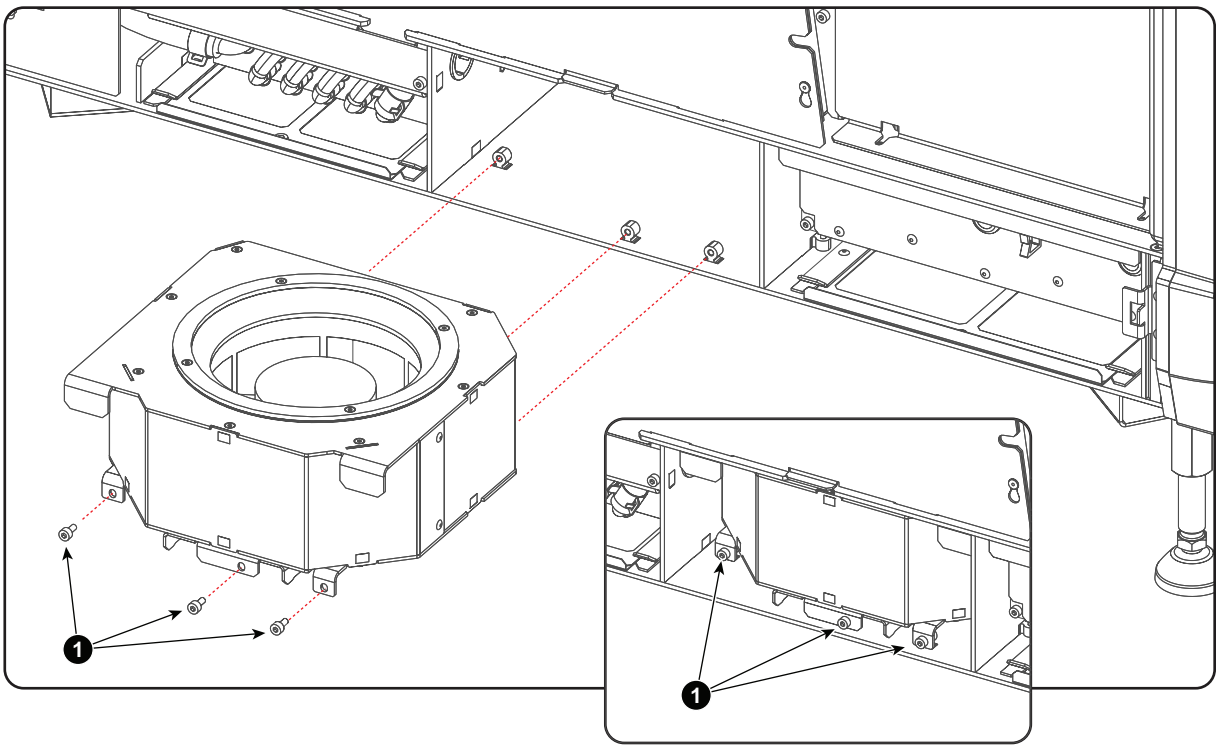


Image 17–18

3. Cut the cable tie which fasten the wire unit (reference 4 Image 17–19).

4. Loosen the 9 screws (reference 1 Image 17–19) to open the sheet metal box. Use a 2.5mm Allen wrench.
5. Loosen the four screws (reference 2 Image 17–19) which secure the fan. Use a 3mm Allen wrench.

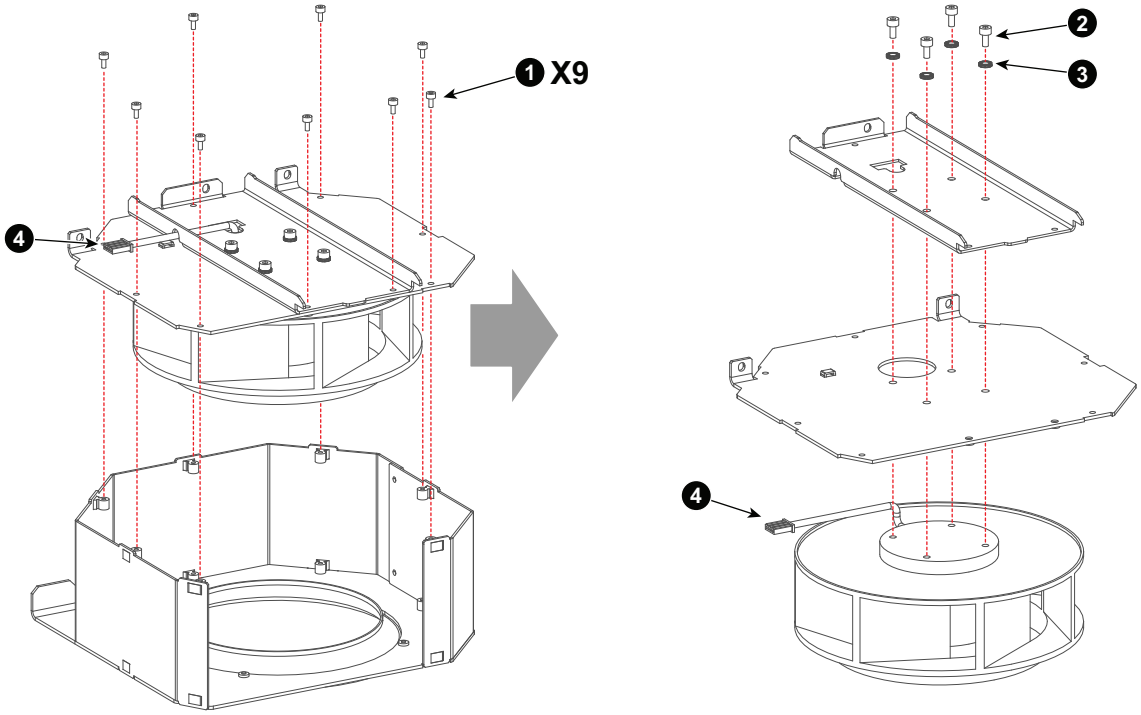


Image 17–19

6. Install a new fan. Guide the wire unit of the fan through the opening of both plates as illustrated (reference 4 Image 17–19). Place a washer (reference 3 Image 17–19) on each screw (reference 2 Image 17–19).
7. Assemble the sheet metal box (see Image 17–19).
8. Fasten the wire unit with a cable tie.
9. Reinstall the fan assembly in the projector (see Image 17–18).
10. Reconnect the wire unit of the Anode fan (see Image 17–17).

# 17.7 Replacement of the Anode fan with plastic housing (MK2)

To access the Anode fan assembly the projector left cover has to be removed. This procedure assumes that the projector left cover is already removed.

## Required tools

- 3mm Allen wrench.
- 2.5mm Allen wrench.
- Set of pliers.

## How to replace the Anode fan?

1. Disconnect the wire unit (reference 1 Image 17–20) of the Anode fan.

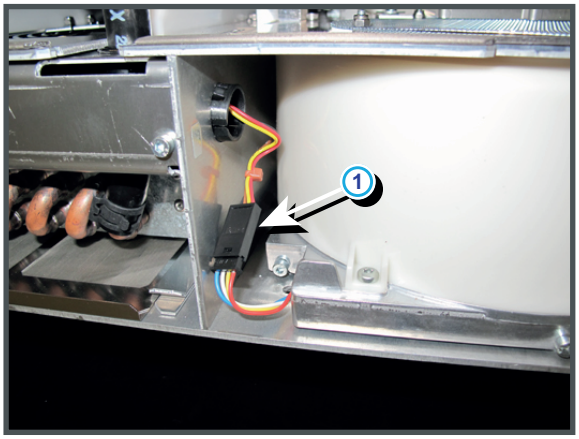


Image 17–20

2. Remove the Anode fan assembly from the projector. Use a 3mm Allen wrench for loosening the two screws (reference 1 Image 17–21) of the assembly as illustrated.

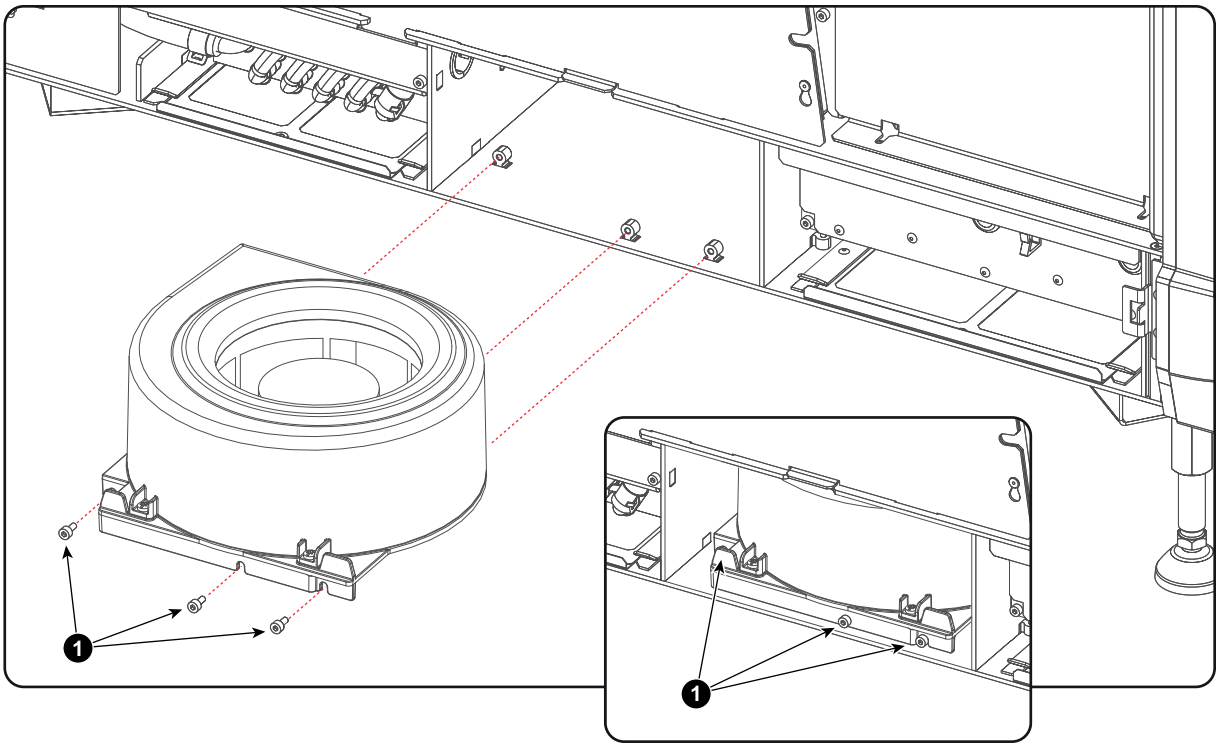


Image 17–21

3. Loosen the two screws (reference 2 Image 17–22) which fasten the wire unit (reference 4 Image 17–22).
4. Loosen the 4 screws (reference 1 Image 17–22) of the plastic housing. Use a 2.5mm Allen wrench.
5. Loosen the four screws (reference 5 Image 17–22) which secure the fan. Use a 3mm Allen wrench.

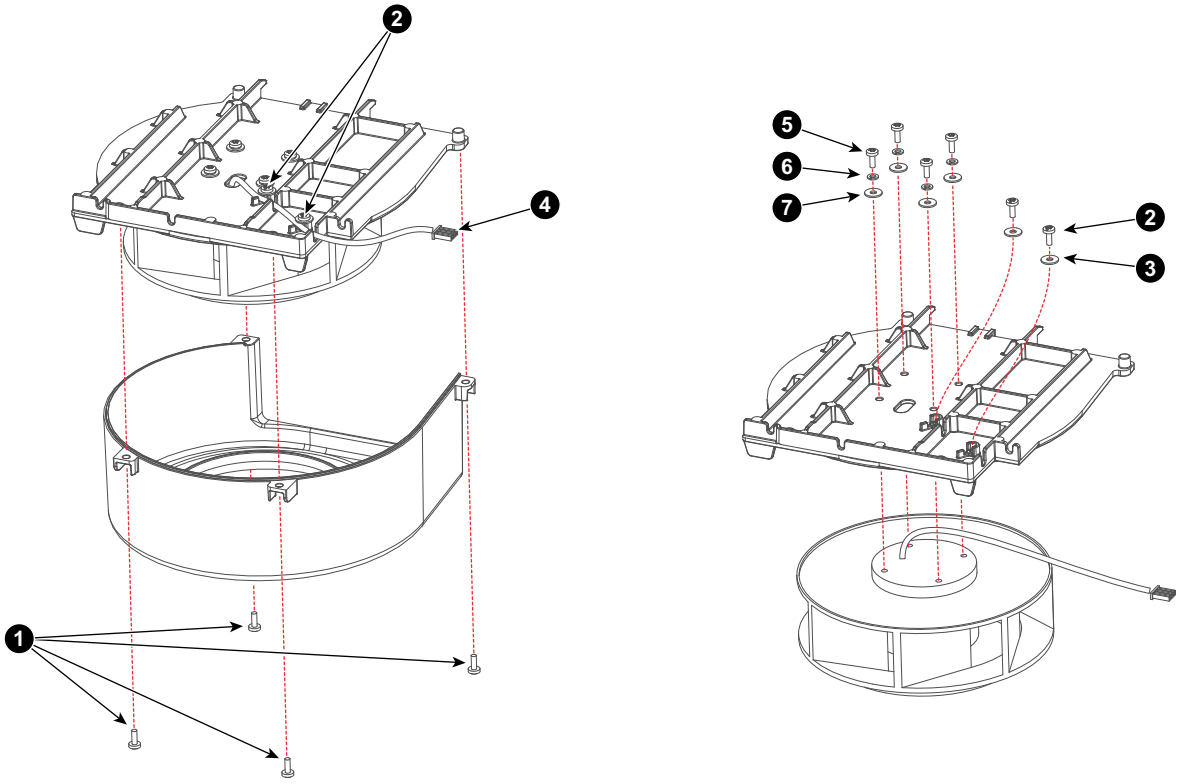


Image 17–22

6. Install a new fan. Guide the wire unit of the fan through the opening of both plates as illustrated (reference 4 Image 17–22). Place a small washer (reference 6 Image 17–22) and a big washer (reference 7 Image 17–22) on each screw (reference 5 Image 17–22).

7. Assemble the sheet metal box (see Image 17–22).
8. Secure the wire unit with two screw (reference 2 Image 17–22). Place a big plain washer (reference 2 Image 17–22) on each screw.
9. Reinstall the fan assembly in the projector (see Image 17–21).
10. Reconnect the wire unit of the Anode fan (see Image 17–20).

# 17.8 Replacement of the Cathode fan

To access the Cathode fan assembly the projector lamp cover and Lamp House have to be removed. This procedure assumes that the projector lamp cover and Lamp House are already removed.

## Required tools

- 3mm Allen wrench.
- 2.5mm Allen wrench.
- Set of pliers.

## How to replace the Cathode fan?

1. Disconnect the wire unit ('reference 1) from the Cathode fan (reference 2 Image 17–23).

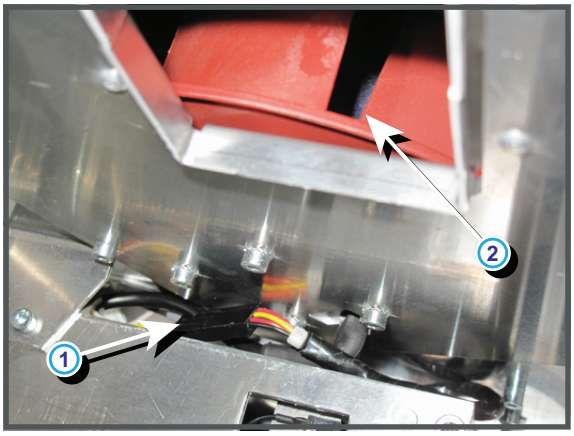


Image 17–23

2. Remove the Cathode fan assembly by loosening the four screws (reference 1 Image 17–24) as illustrated. Use a 3mm Allen wrench.

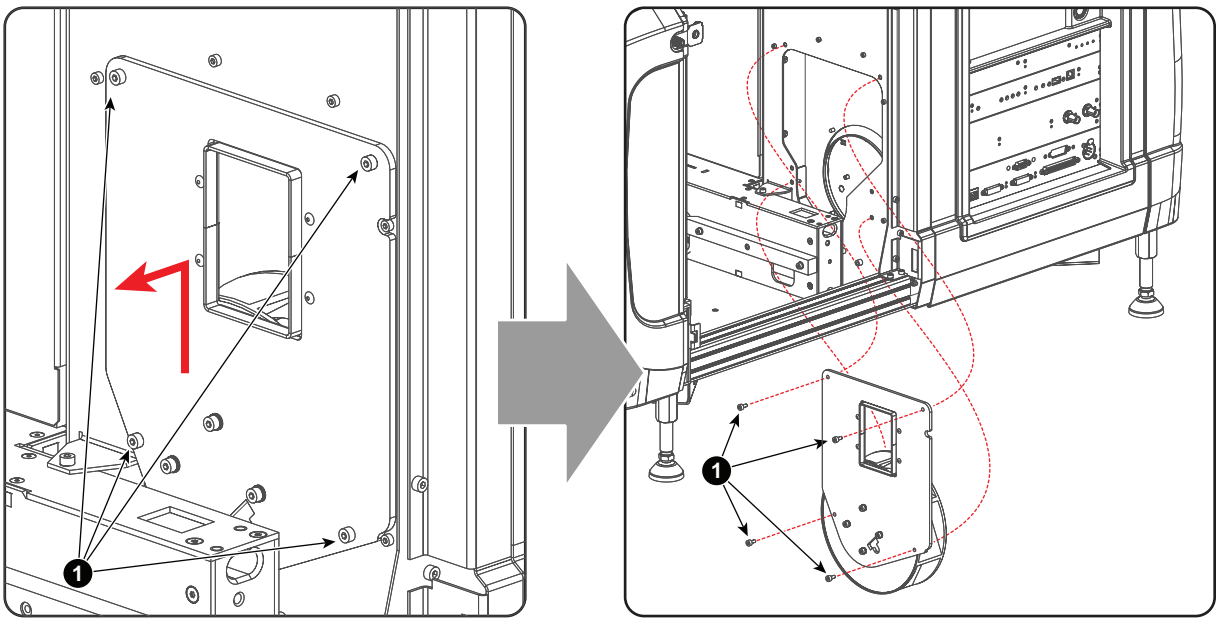


Image 17–24

3. Remove the mounting plate from the Cathode fan by loosening the four screws (reference 1 Image 17–25) as illustrated. Use a 3mm Allen wrench.

4. Install a new Cathode fan on the mounting plate. Ensure to guide the wire unit of the Cathode fan through the hole (reference 3 Image 17–25) in the mounting plate. Place a washer (reference 2 Image 17–25) on each screw.

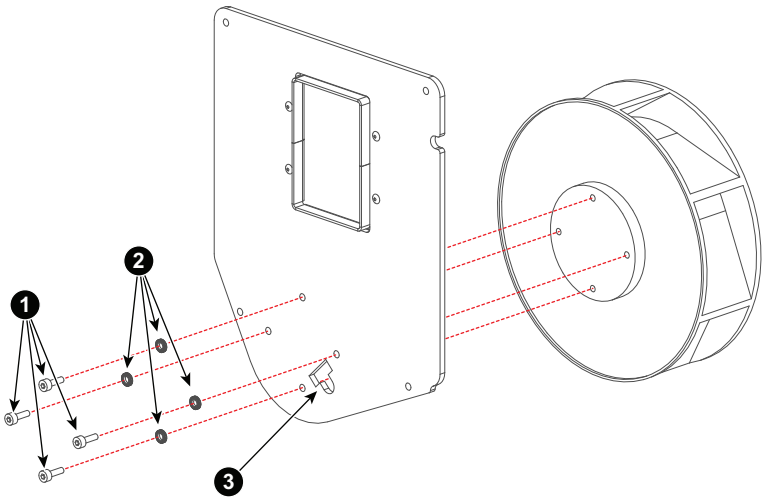


Image 17–25

5. Reinstall the Cathode fan assembly in the projector (see Image 17–24).
6. Reconnect the wire unit of the Cathode fan (see Image 17–23).

# 17.9 Replacement of the ICP fan

To access the ICP fan the Button assembly and Fan Control board have to be removed first. This procedure assumes that the Button assembly and Fan Control board is already removed.

## Required tools

2mm Allen wrench.

## How to replace the ICP fan?

1. This connect the wire unit of the ICP fan (reference 1 Image 17–26) from the Signal Backplane (reference 2 Image 17–26)

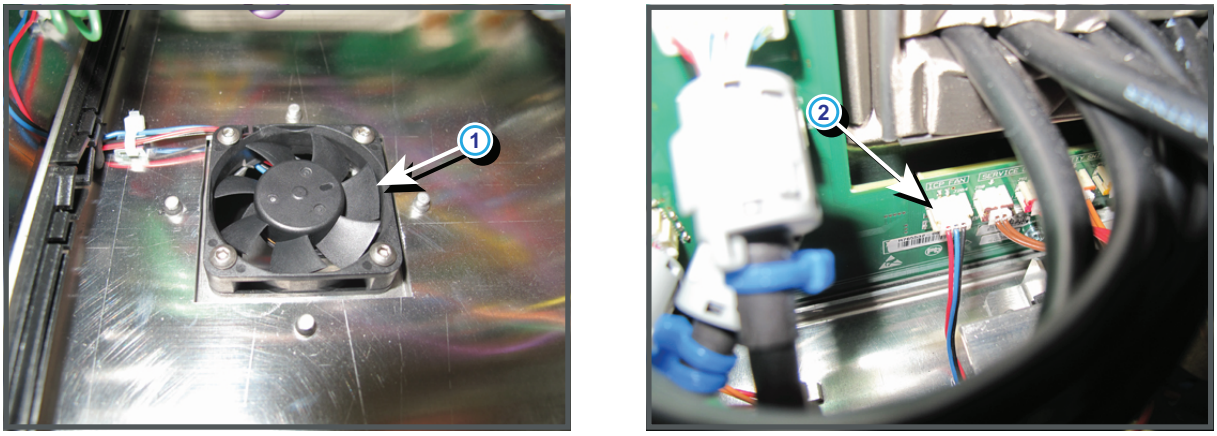


Image 17–26

2. Cut the cable tie of the wire unit (reference 1 Image 17–27) and guide the wire unit through the hole (reference 2 Image 17–27).

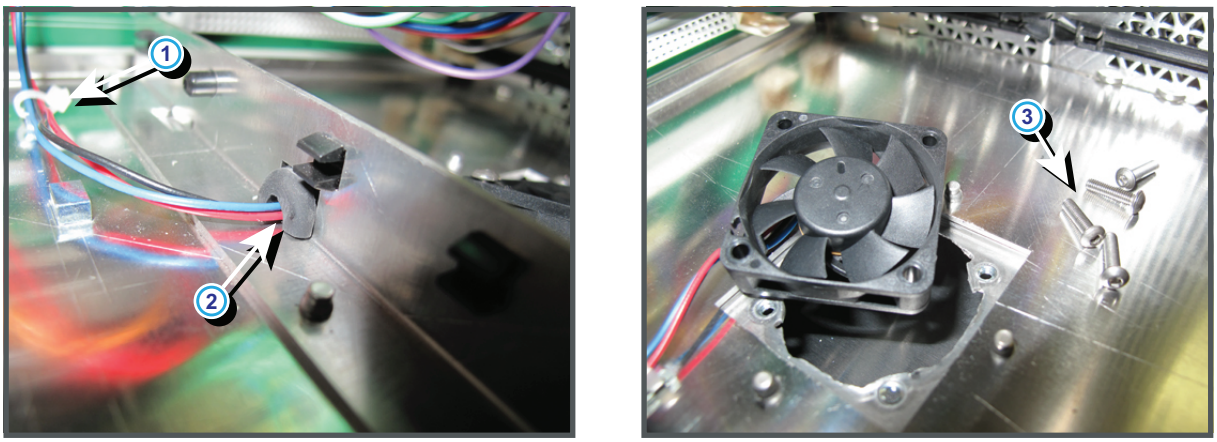


Image 17–27

3. Replace the fan. Use a 2mm Allen wrench to loosen the four screws (reference 3 Image 17–27) of the fan. Ensure that the air flow of the fan is downwards oriented.
4. Guide the wire unit of the new fan through the opening (reference 2 Image 17–27) and secure the wire unit with a cable tie (reference 1 Image 17–27).
5. Reconnect the wire unit with the Signal Backplane (reference 2 Image 17–26).

# 18 Trouble shooting

18.1 Trouble shooting checklist ..... 442
18.2 Log files ..... 549

## About this chapter

This chapter enumerates all possible error codes which can appear on the Touch Panel display of the cinema projector or in the projector log files. Note that some codes have a warning and an error state. Some only have an error state, others have only a warning state. In case of a “warning” the projector remains to operate. Nevertheless, it is recommended to solve the problem which causing the “warning” as soon as possible otherwise, the “warning” state may turn into an “error” state which will switch off the projector consequently.

The codes are placed in ascending order to make it easier to look up the code and find an appropriate solution.

# 18.1 Trouble shooting checklist

### Code 5003: “light sensor - no communication” (Error)

| Situation | Solution |
|---|---|
| No communication with the Light Sensor Module (CLO). | 1. Reboot the projector:<br>a) Turn off the Lamp and cool down the Lamp for at least 1 minute if hot.<br>b) Switch off the power of the unit and wait for at least 15 seconds.<br>c) Switch on the power of the unit and respect normal startup procedure.<br>2. Check if the wire unit (reference 1 of Image 18–1) is connected with the CLO module and with the Signal Backplane.<br>**Note**: To access the Signal Backplane the top cover of the Card Cage has to be removed. Removing the top cover will lead to an authorization request upon startup.<br>3. If the problem remains, replace the CLO module. See service manual chapter “Replacement of the Light Sensor Module (First generation Light Pipe)”, page 267. |

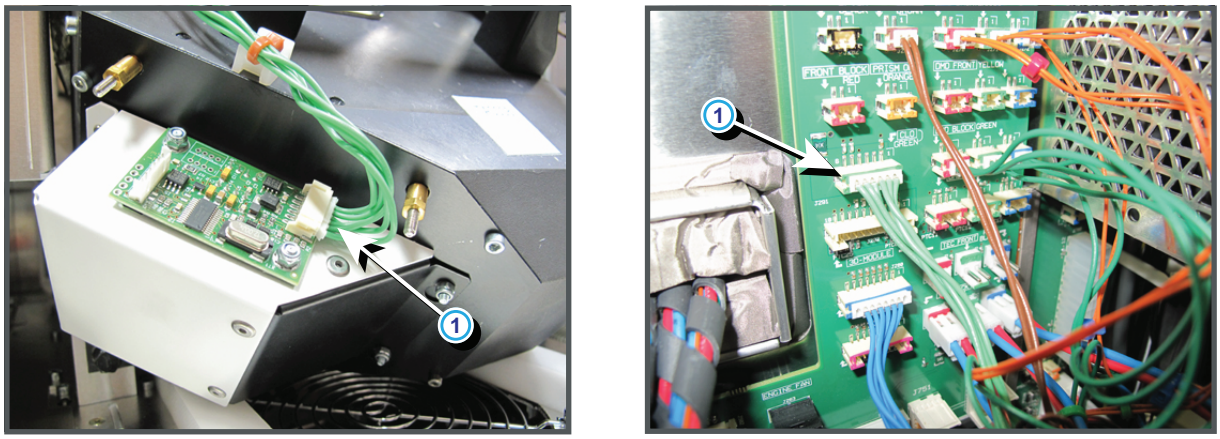


Image 18–1

### Code 5004: “lamp - no communication” (Error)

| Situation | Solution |
|---|---|
| Lamp House is not correctly installed. | Check if the Lamp House is properly installed. Ensure that the two fixation screws (reference 2 of Image 18–2) of the Lamp House are fastened. |
| Wrong Lamp House detected in lamp compartment of the projector. | Replace the Lamp House with a compatible Lamp House for this projector. |
| No communication with the Lamp House. | 1. Check if the blue socket (reference 3 of Image 18–3) of the Lamp House is not damaged.<br>2. Check if the blue socket (reference 4 of Image 18–3) in the lamp compartment is not damaged.<br>3. Check if the wire unit (reference 5 of Image 18–3) is connected with the blue socket in the lamp compartment and is plugged in its socket on the Signal Backplane (reference 6 Image 18–4).<br>4. Replace the Cinema Controller board.<br>5. Replace the Signal Backplane. |

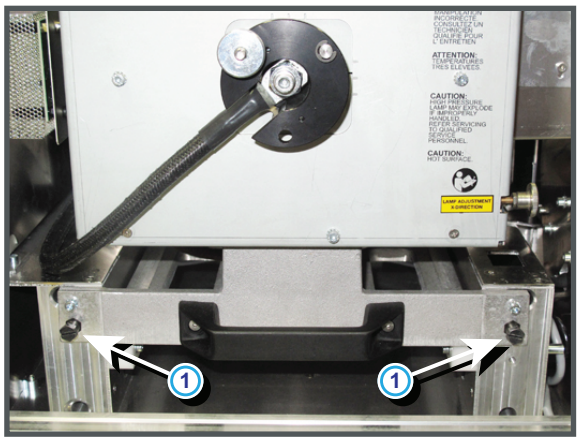


Image 18–2

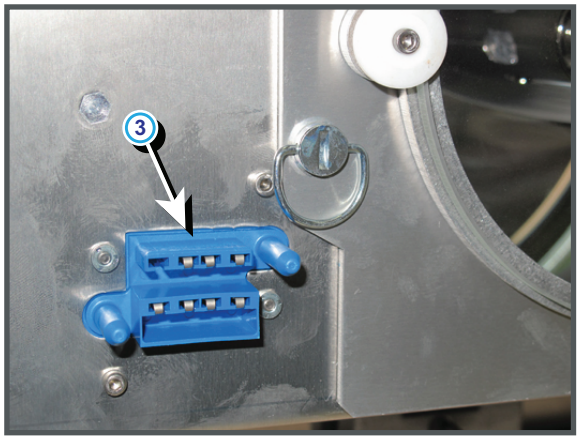


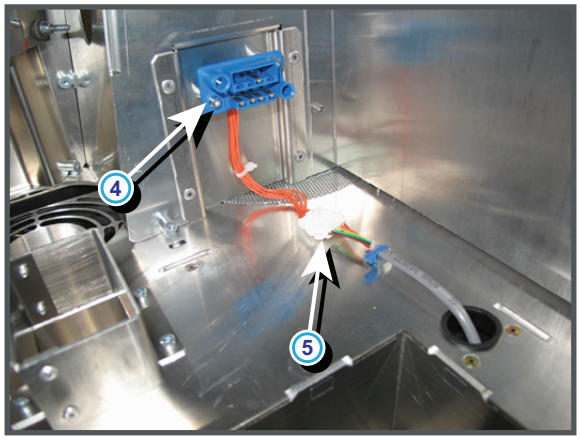


Image 18–3

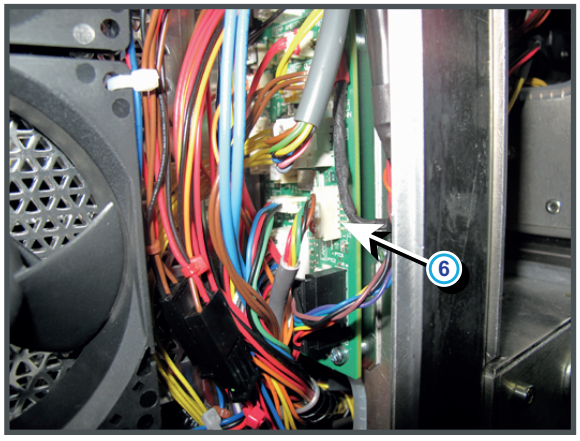


Image 18–4

## Code 5005: “lamp power supplies - communication failed” (Error)

| Situation | Solution |
|---|---|
| LPS communication cable disconnected from the CTLB-IN port of the first LPS unit in the LPS rack. | Check if the LPS communication cable (reference 4 of Image 18–5) is connected with the CTLB-IN port of the first LPS unit in the LPS rack of the projector. |
| Disconnected blue LPS cascade wire unit (CTLB-IN / CTLB-OUT). | Reconnect the blue wire unit (reference 5 Image 18–5) between the “CTLB-IN” and “CTLB-OUT” sockets of the LPS units. |

| Situation | Solution |
|---|---|
| LPS communication cable disconnected form the Signal Backplane. | Check if the LPS communication cable (reference 7 of Image 18–6) is connected with the Signal Backplane. |
| Malfunction of one of the LPS modules. The red LED “ERR” of the malfunction LPS module lit up (reference 8 of Image 18–6). | Replace the malfunction LPS unit. See service manual chapter “Removal of an LPS module”, page 56. |
| Malfunction Barco Cinema Controller board. | Replace the malfunction Barco Cinema Controller board. See service manual chapter “Replacement of a Card Cage board”, page 360. |

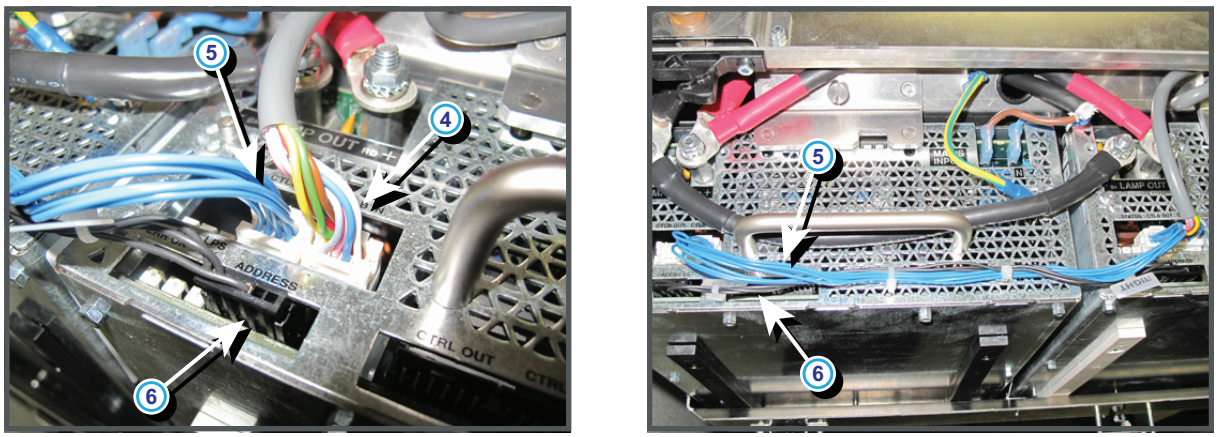


Image 18–5

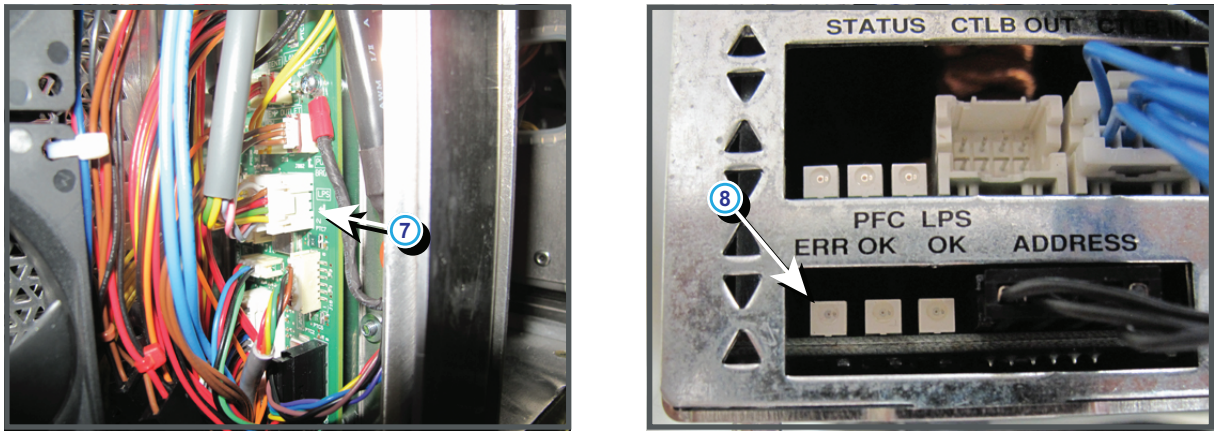


Image 18–6

## Code 5010: “pump - refill mode is on” (Warning)

| Situation | Solution |
|---|---|
| The projector is in “Refill mode”. Only the pump of the liquid cooling circuit is working. | When cooling liquid refreshing is finished, tip on “Exit refill mode” in the Communicator software. |

## Code 5020: “system - read projector identification failed” (Error)

| Situation | Solution |
|---|---|
| Cinema Controller failure. | Re-seat/replace the Cinema Controller board. |
| Corrupt or invalid Projector ID card (reference 1 of Image 18–7) | Contact Barco for further actions. |

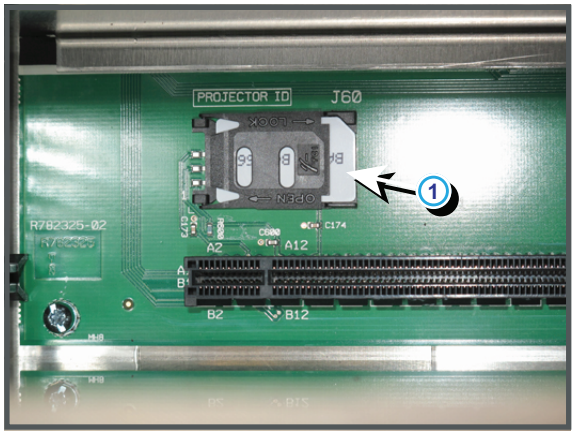


Image 18–7

## Code 5042: “cold mirror fan - speed too low” (Error)

| Situation | Solution |
|---|---|
| Wire unit (reference 1 Image 18–8) of the Cold Mirror fan (reference 2 Image 18–8) disconnected. | Remove the left cover of the projector and check the connection of the wire unit of the fan below the Cold Mirror. Simultaneous check if the wire unit (reference 3 Image 18–8) of the SPG fan (reference 4 Image 18–8) is not disconnected as well. |
| Wire unit of the fan units (reference 5 Image 18–8) disconnected from the Power Backplane. | Remove the front cover and front dust filter from the projector and check if the wire unit (reference 5 Image 18–8) is inserted in the Signal Backplane. |
| Blocked fan (reference 2 Image 18–8). | Unblock the fan. Ensure that the fan can turn freely. |
| Damaged wire unit. | Check if the wire unit of the fan is not damaged. Repair if possible, otherwise replace with new one. |
| Malfunction Fan Control board. | Replace the Fan Control board. See service manual chapter “Replacement of a Card Cage board”, page 360. |
| Fan end of life. | Replace the fan. See service manual chapter “Replacement of the SPG/ Cold Mirror fan”, page 430. |

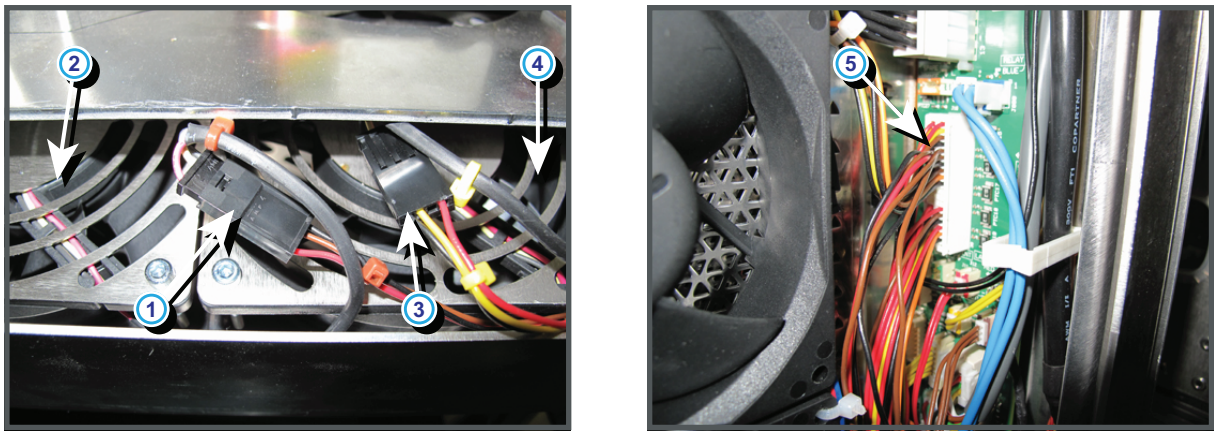


Image 18–8

## Code 5043: “cold mirror fan - speed low” (Warning)

| Situation | Solution |
|---|---|
| Blocked fan (reference 2 Image 18–9). | Unblock the fan. Ensure that the fan can turn freely. |
| Damaged wire unit (reference 1 & 5Image 18–9) | Check if the wire unit of the fan is not damaged. Repair if possible, otherwise replace with new one. |
| Malfunction Fan Control board. | Replace the Fan Control board. See service manual chapter “Replacement of a Card Cage board”, page 360. |
| Fan end of life. | Replace the fan. See service manual chapter “Replacement of the SPG/ Cold Mirror fan”, page 430. |

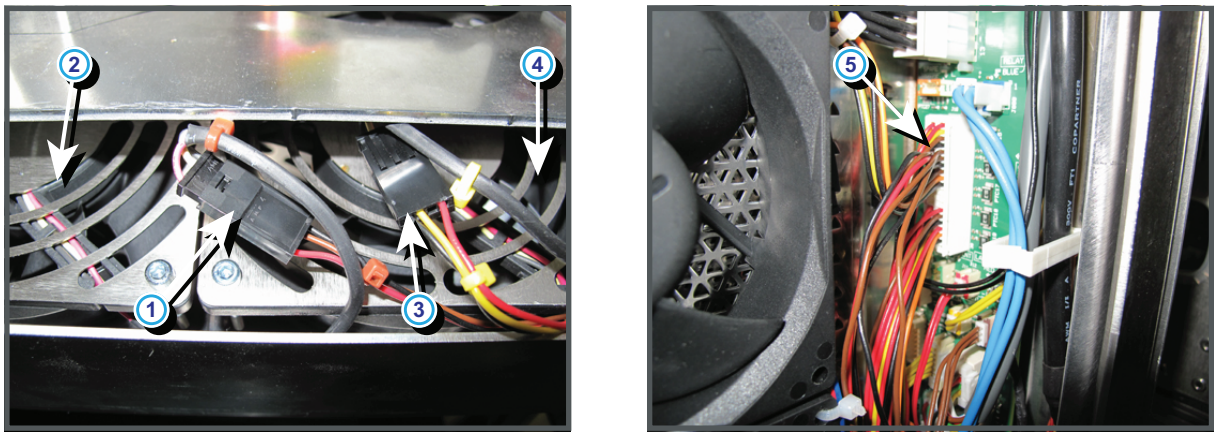


Image 18–9

## Code 5053: “engine fan - speed low ” (Warning)

| Situation | Solution |
|---|---|
| Blocked fan (reference 2 Image 18–10). | Unblock the fan. Ensure that the fan can turn freely. |
| Damaged wire unit (reference 1 & 3 Image 18–10) of the fan between the Card Cage and the compartment of the Light Processor. | Check if the wire unit of the fan is not damaged. Repair if possible, otherwise replace with new one. |

| Situation | Solution |
|---|---|
| Malfunction Fan Control board. | Replace the Fan Control board. See service manual chapter “Replacement of a Card Cage board”, page 360. |
| Fan end of life. | Replace the fan. See service manual chapter “Replacement of the Light Processor fan”, page 424. |

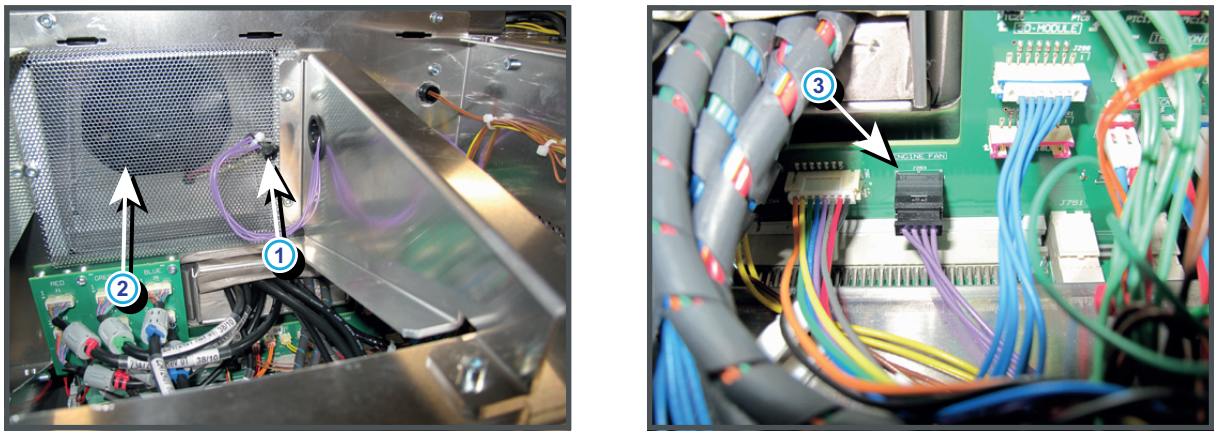


Image 18–10

## Code 5063: “heat exchanger fan - speed low” (Warning)

| Situation | Solution |
|---|---|
| Blocked fan (reference 2 Image 18–11). | Unblock the fan. Ensure that the fan can turn freely. |
| Damaged wire unit (reference 1 Image 18–11) of the Heat Exchanger fans (reference 2 Image 18–11). | Check if the wire unit of the fan is not damaged. Repair if possible, otherwise replace with new one.<br>• Pull out the Liquid Cooling assembly (reservoir, pump and heat exchanger) from the projector until you see the wire unit of the fans. Check if the wire unit is not damaged. Ensure the wire units are hidden between the fans and thus not obstruct the air flow of the fans.<br>• Remove the front cover and front dust filter from the projector and check if the wire unit (reference 5 Image 18–11) is not damaged. |
| Malfunction Fan Control board. | Replace the Fan Control board. See service manual chapter “Replacement of a Card Cage board”, page 360. |
| Fan end of life. | Replace the fan. See service manual chapter “Replacement of the Heat Exchanger fans”, page 429. |

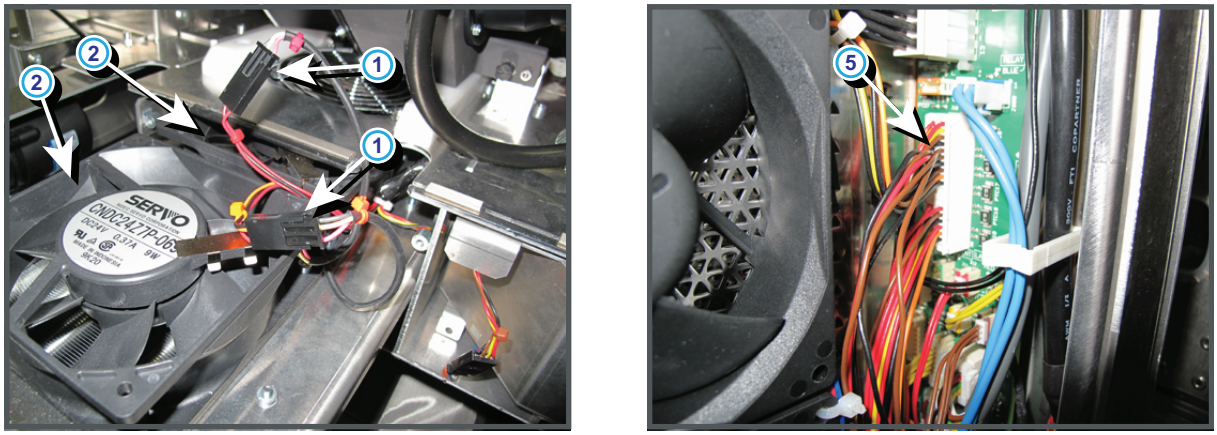


Image 18–11

## Code 5072: “lamp anode fan - speed too low” (Error)

| Situation | Solution |
|---|---|
| Wire unit (reference 1Image 18–12) of the Anode Fan is disconnected. | Remove the left side cover of the projector and check the connection of the Anode Fan. |
| Wire unit (reference 5 Image 18–12) of the fan units is disconnected from the Signal Backplane. | Remove the front cover and front dust filter from the projector and check if the wire unit (reference 5 Image 18–12) is inserted in the Signal Backplane. |
| Blocked Anode Fan (reference 2 Image 18–12). | Check if the Anode Fan is not blocked. Ensure that the Anode Fan can turn freely. |
| Damaged wire unit. | Check if the wire unit of the Anode Fan is not damaged. Repair if possible, otherwise replace with new one. |
| Malfunction Fan Control board. | Replace the Fan Control board. See service manual chapter “Replacement of a Card Cage board”, page 360. |
| Anode fan (reference 1 Image 18–12) end of life. | Replace the Anode Fan. See service manual chapter “Replacement of the Anode fan”, page 433. |

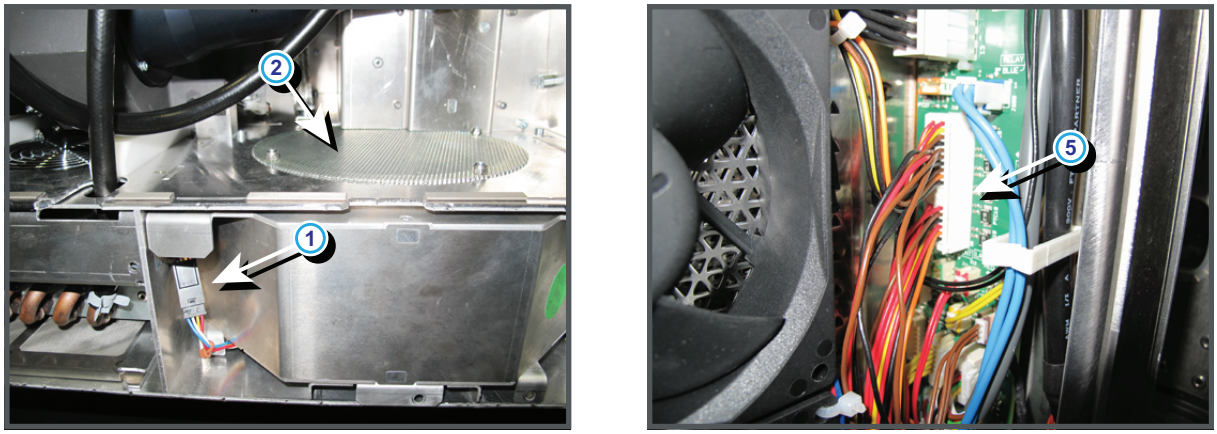


Image 18–12

## Code 5073: “lamp anode fan - speed low” (Warning)

| Situation | Solution |
|---|---|
| Blocked Anode Fan (reference 2 Image 18–13). | Check if the Anode Fan is not blocked. Ensure that the Anode Fan can turn freely. |
| Damaged wire unit (reference 1 & 5 Image 18–13). | Check if the wire unit of the Anode Fan is not damaged. Repair if possible, otherwise replace with new one. |
| Malfunction Fan Control board. | Replace the Fan Control board. See service manual chapter “Replacement of a Card Cage board”, page 360. |
| Anode fan (reference 1 Image 18–13) end of life. | Replace the Anode Fan. See service manual chapter “Replacement of the Anode fan”, page 433. |

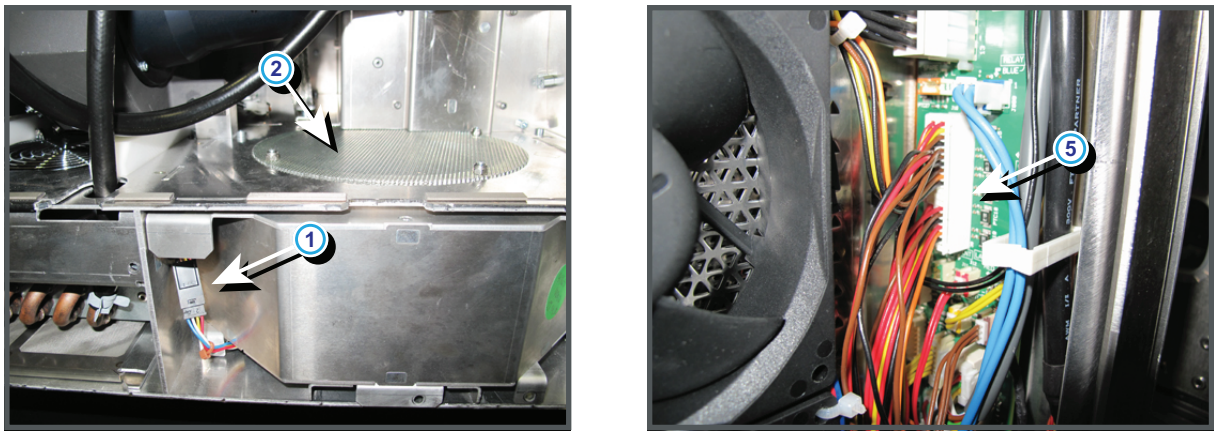


Image 18–13

## Code 5082: “lamp cathode fan - speed too low” (Error)

| Situation | Solution |
|---|---|
| Wire unit (reference 1Image 18–14) of the Cathode Fan is disconnected. | Remove the left side cover of the projector and check the connection of the Cathode Fan. |
| Wire unit (reference 5 Image 18–14) of the fan units is disconnected from the Signal Backplane. | Remove the front cover and front dust filter from the projector and check if the wire unit (reference 5Image 18–14) is inserted in the Signal Backplane. |
| Blocked Cathode Fan (reference 2 Image 18–14). | Check if the Cathode Fan is not blocked. Ensure that the Cathode Fan can turn freely. |
| Damaged wire unit. | Check if the wire unit of the Cathode Fan is not damaged. Repair if possible, otherwise replace with new one. |
| Malfunction Fan Control board. | Replace the Fan Control board. See service manual chapter “Replacement of a Card Cage board”, page 360. |
| Cathode fan (reference 1 Image 18–14) end of life. | Replace the Cathode Fan. See service manual chapter “Replacement of the Cathode fan”, page 438. |

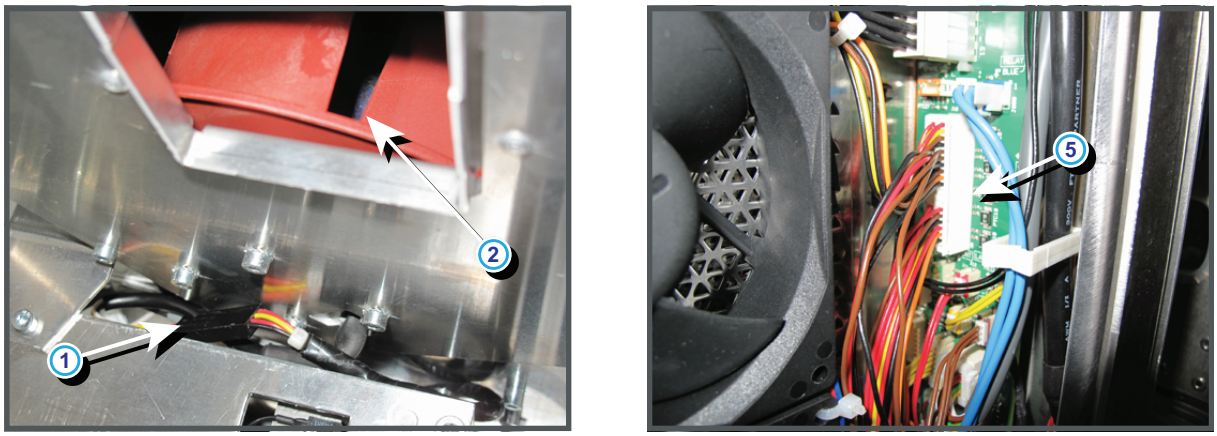


Image 18–14

## Code 5083: “lamp cathode fan - speed low” (Warning)

| Situation | Solution |
|---|---|
| Blocked Cathode Fan (reference 2 Image 18–15). | Check if the Cathode Fan is not blocked. Ensure that the Cathode Fan can turn freely. |
| Damaged wire unit (reference 1 & 5 Image 18–15) of the Cathode Fan. | Check if the wire unit of the Cathode Fan is not damaged. Repair if possible, otherwise replace with new one. |
| Malfunction Fan Control board. | Replace the Fan Control board. See service manual chapter “Replacement of a Card Cage board”, page 360. |
| Cathode fan (reference 1 Image 18–15) end of life. | Replace the Cathode Fan. See service manual chapter “Replacement of the Cathode fan”, page 438. |

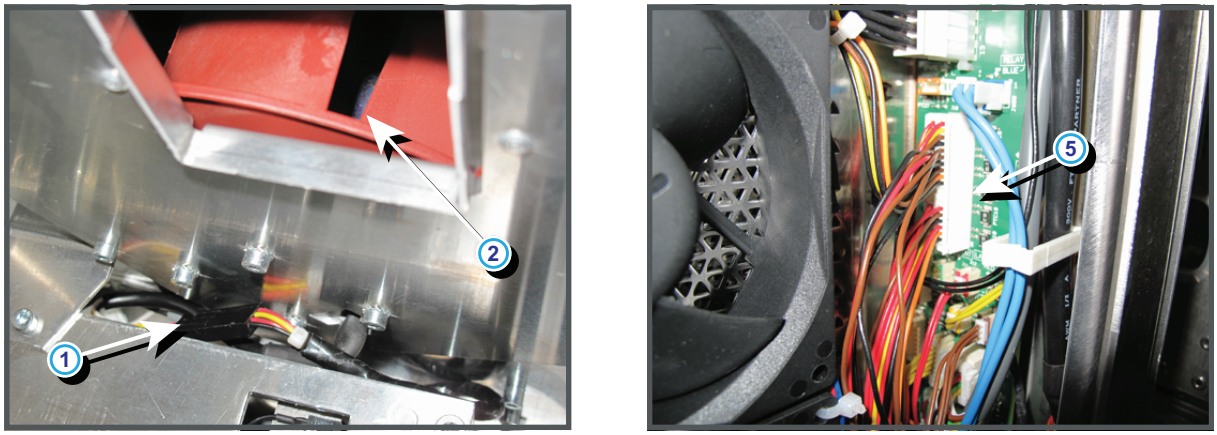


Image 18–15

## Code 5103: “smps fan 1 (left side) - speed low” (Warning)

| Situation | Solution |
|---|---|
| Blocked fan (reference 2 of Image 18–16). | Unblock the fan. Ensure that the fan can turn freely. |
| Damaged wire unit (reference 1 & 5 of Image 18–16) of the left SMPS fan. | Remove the front cover and front dust filter from the projector and check if the wire unit of the fan is not damaged. Repair if possible, otherwise replace with new one.<br>Remove the front cover and front dust filter from the projector and check if the wire unit (reference 5 Image 18–16) is not damaged.<br>Note: SMPS fan 1 is the fan which wire unit is marked with a brown cable tie. SMPS fan 2 is the fan which wire unit is marked with a red cable tie. |
| Malfunction Fan Control board. | Replace the Fan Control board. See service manual chapter “Replacement of a Card Cage board”, page 360. |
| Fan end of life. | Replace the fan. See service manual chapter “Replacement of the Card Cage fans”, page 422. |

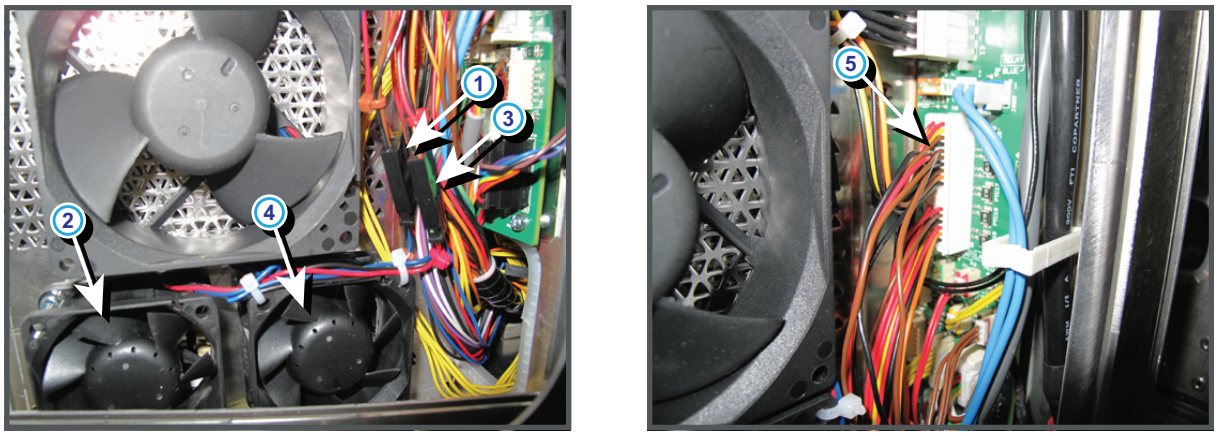


Image 18–16

## Code 5113: “smps fan 2 (right side) - speed low” (Warning)

| Situation | Solution |
|---|---|
| Blocked fan (reference 4 of Image 18–17). | Unblock the fan. Ensure that the fan can turn freely. |
| Damaged wire unit (reference 3 & 5 of Image 18–17) of the right SMPS fan (reference 4 of Image 18–17). | Remove the front cover and front dust filter from the projector and check if the wire unit of the fan is not damaged. Repair if possible, otherwise replace with new one.<br>Remove the front cover and front dust filter from the projector and check if the wire unit (reference 5 Image 18–17) is not damaged.<br>Note: SMPS fan 2 is the fan which wire unit is marked with a red cable tie. SMPS fan 1 is the fan which wire unit is marked with a brown cable tie. |
| Malfunction Fan Control board. | Replace the Fan Control board. See service manual chapter “Replacement of a Card Cage board”, page 360. |
| Fan end of life. | Replace the fan. See service manual chapter “Replacement of the Card Cage fans”, page 422. |

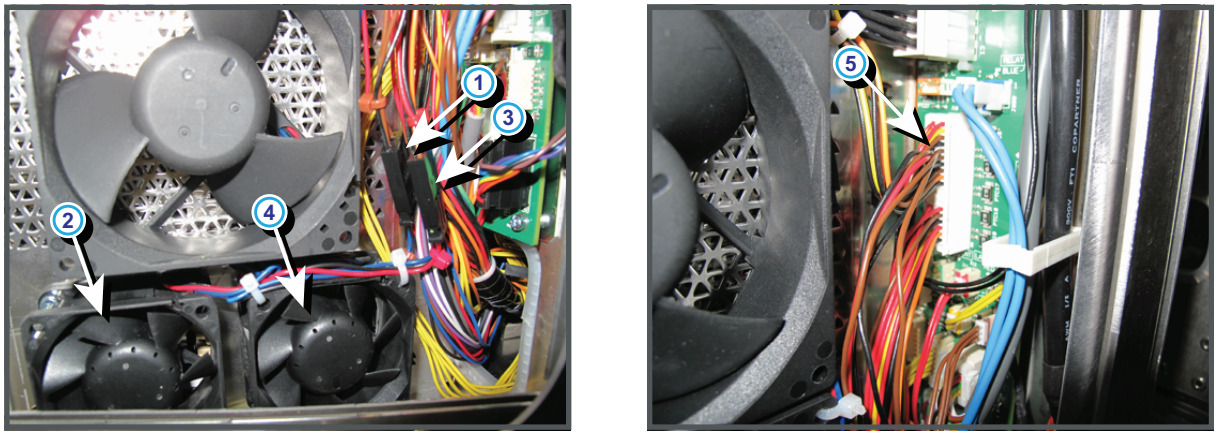


Image 18–17

## Code 5143: “electronics fan 1 (top side) - speed low” (Warning)

| Situation | Solution |
|---|---|
| Blocked fan (reference 2 of Image 18–18). | Unblock the fan. Ensure that the fan can turn freely. |
| Damaged wire unit (reference 1 of Image 18–18) of the top card cage fan (reference 2 of Image 18–18). | Remove the front cover and front dust filter from the projector and check if the wire unit of the fan is not damaged. Repair if possible, otherwise replace with new one.<br>Remove the front cover and front dust filter from the projector and check if the wire unit (reference 5 Image 18–18) is not damaged.<br>Note: Card cage fan 1 is the fan which wire unit is marked with a yellow cable tie. Card cage fan 2 is the fan which wire unit is marked with a orange cable tie. |
| Malfunction Fan Control board. | Replace the Fan Control board. See service manual chapter “Replacement of a Card Cage board”, page 360. |
| Fan end of life. | Replace the fan. See service manual chapter “Replacement of the Card Cage fans”, page 422. |

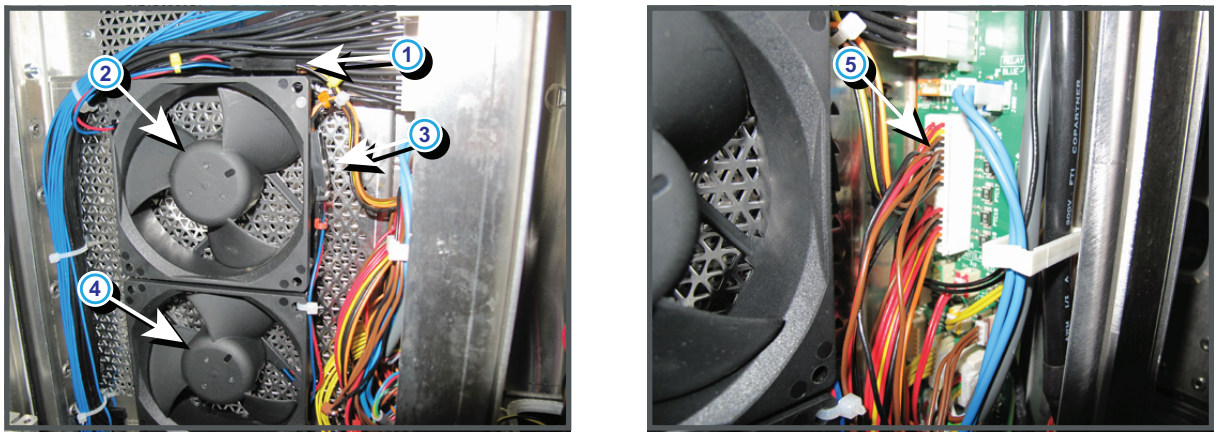

Image 18–18

## Code 5153: “electronics fan 2 (bottom side) - speed low” (Warning)

| Situation | Solution |
|---|---|
| Blocked fan (reference 4 of Image 18–19). | Unblock the fan. Ensure that the fan can turn freely. |
| Damaged wire unit (reference 3 of Image 18–19) of the bottom card cage fan (reference 4 of Image 18–19). | Remove the front cover and front dust filter from the projector and check if the wire unit of the fan is not damaged. Repair if possible, otherwise replace with new one.<br>Remove the front cover and front dust filter from the projector and check if the wire unit (reference 5 Image 18–19) is not damaged.<br>Note: Card cage fan 1 is the fan which wire unit is marked with a yellow cable tie. Card cage fan 2 is the fan which wire unit is marked with a orange cable tie. |
| Malfunction Fan Control board. | Replace the Fan Control board. See service manual chapter “Replacement of a Card Cage board”, page 360. |
| Fan end of life. | Replace the fan. See service manual chapter “Replacement of the Card Cage fans”, page 422. |

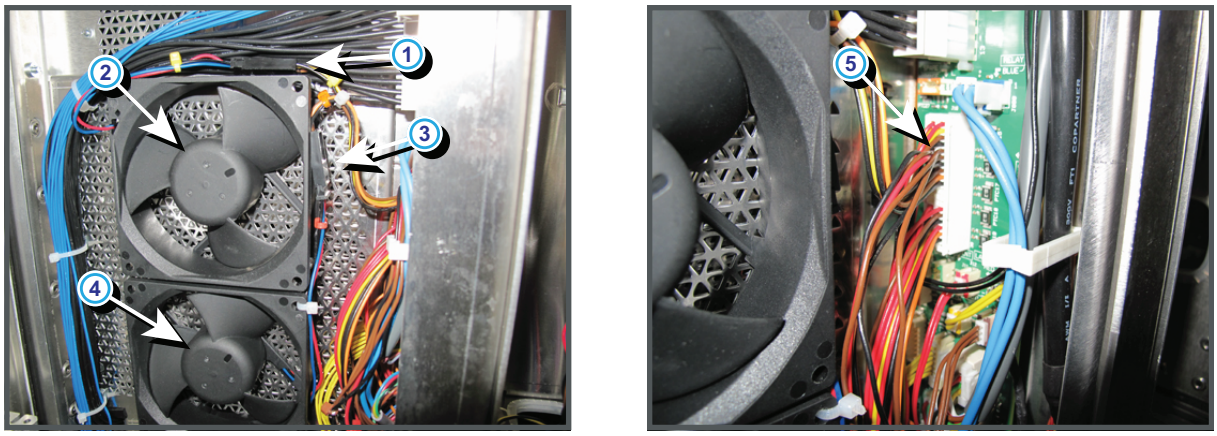


Image 18–19

## Code 5160: “engine switch - not ok” (Error)

| Situation | Solution |
|---|---|
| The Light Processor is not correctly installed. | Check if the Light Processor is properly installed. Ensure that the fixation screws (reference 1 Image 18–20) at the foot of the Light Processor are fastened. See service manual chapter “Installation of the light processor assembly”, page 242. |
| Micro switch (reference 2 Image 18–20) disconnected from the wire unit (reference 3 Image 18–20). | Check if the micro switch is connected with the wire unit. |
| Wire unit of the micro switch (reference 4 Image 18–20) disconnected from the Signal Backplane. | Check if the wire unit (reference 4 Image 18–20) is plugged in on the Signal Backplane. |
| Defect micro switch (reference 2 Image 18–20). | Replace the micro switch. |

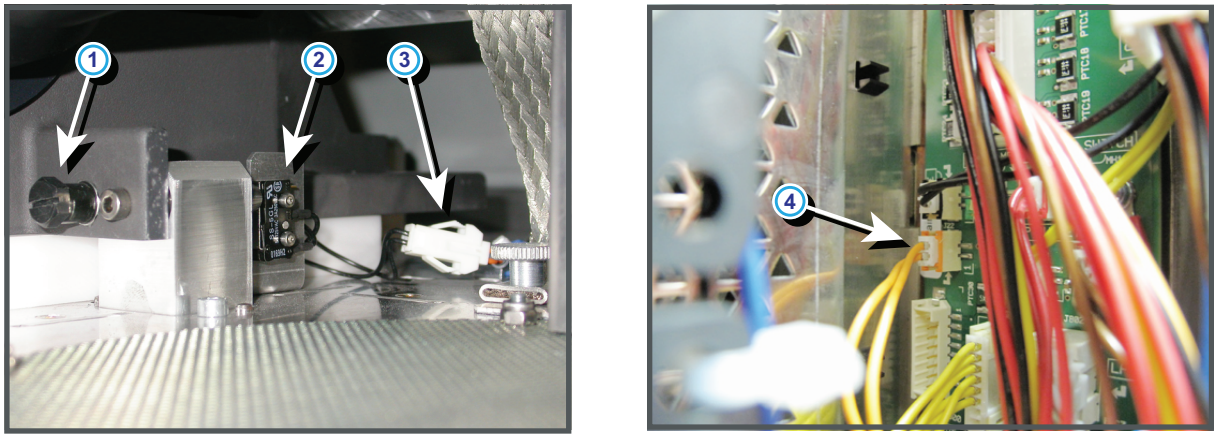


Image 18–20

## Code 5180: “light source - not connected” (Error)

| Situation | Solution |
|---|---|
| light source is not correctly installed. | Check if the light source is properly installed. Make sure that both fixation screws (reference 1 Image 18–21) at the base of the Lamp House are fastened. See service manual chapter “Installation of the Lamp House”, page 119 |
| Defect micro switch (reference 2 Image 18–22). | Replace the micro switch. |
| Wire unit of the micro switch (reference 3 Image 18–22) disconnected from the Signal Backplane. | Check if the wire unit (reference 3 Image 18–22) is plugged in on the Signal Backplane. |
| Wire unit of the micro switch (reference 2 Image 18–21) disconnected from the micro switch. | Remove the light source, loosen the two screws of the micro switch and pull out the micro switch. The black wire unit of the micro switch must be connected with the red wire unit (reference 2 Image 18–21). |

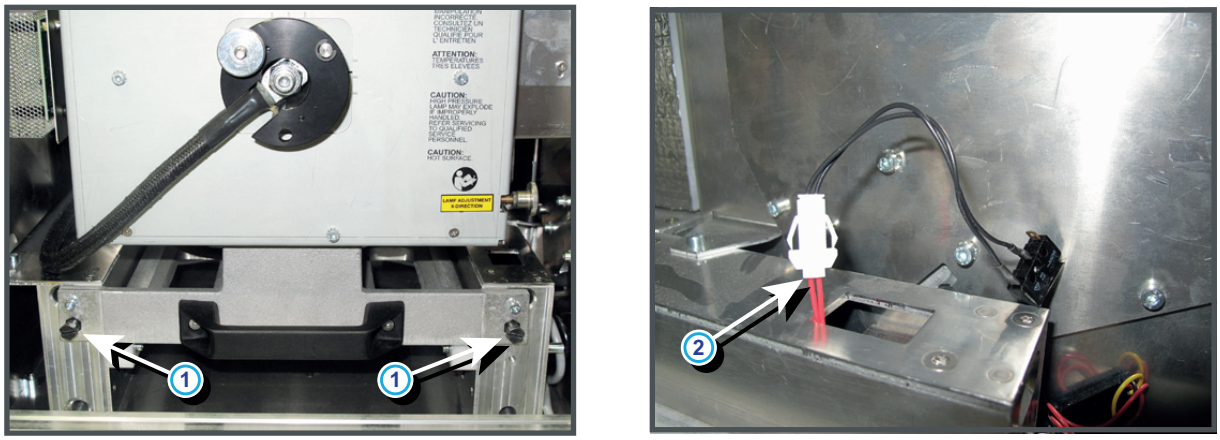


Image 18–21

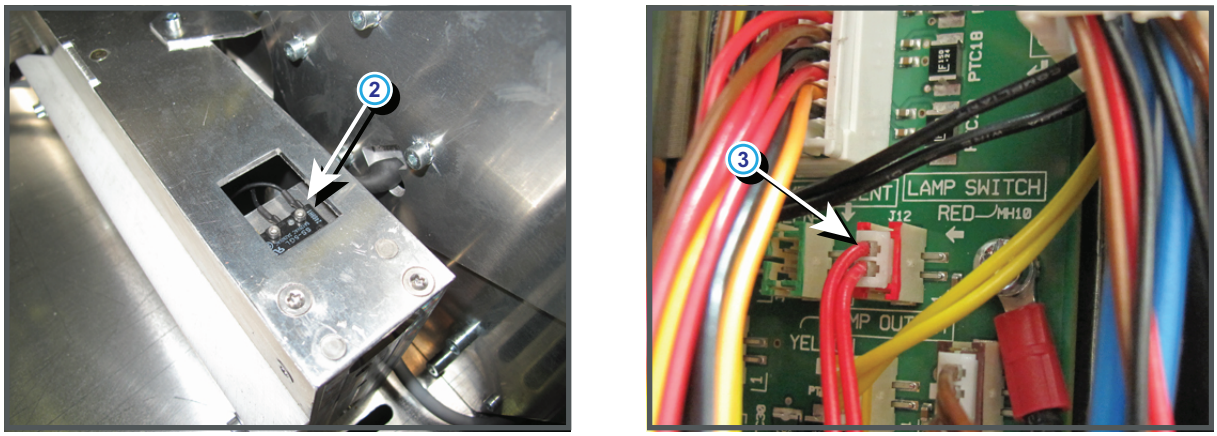


Image 18–22

## Code 5212: “pump - speed too low” (Error)

| Situation | Solution |
|---|---|
| The pump of the cooling circuit is electrical disconnected. | Check if the wire unit (reference 1 Image 18–23) of the pump is properly connected. To check if the wire unit is properly connected the cooling assembly has to be a few cm pulled out of the projector chassis. |
| Malfunction pump of the cooling circuit. You don't feel any vibrations when touching the pump after activating the “Refill mode” via the Communicator software. | 1. Check the electrical resistance of the pump winding. Replace the pump if infinite.<br>2. Drain the liquid cooling circuit, open the pump and check if the pump rotor is not blocked. If so, remove the rotor and clean the bearings of the pump. See service manual chapter “Liquid Cooling Circuit”, page 281. |
| Wire unit of the pump (reference 2 Image 18–23) is disconnected from the Signal Backplane. | Remove the front cover and front dust filter from the projector and check if the wire unit (reference 2 Image 18–23) is inserted in the Signal Backplane. |
| Malfunction Fan Control board. | Measure voltage on pump wire while in refill mode. Voltage should be about 20V. If voltage is incorrect then replace the Fan Control board. See service manual chapter “Replacement of a Card Cage board”, page 360. |
| Pump end of life. | Replace the pump. See service manual chapter “Replacement of the Pump (RD to RD)”, page 297. |

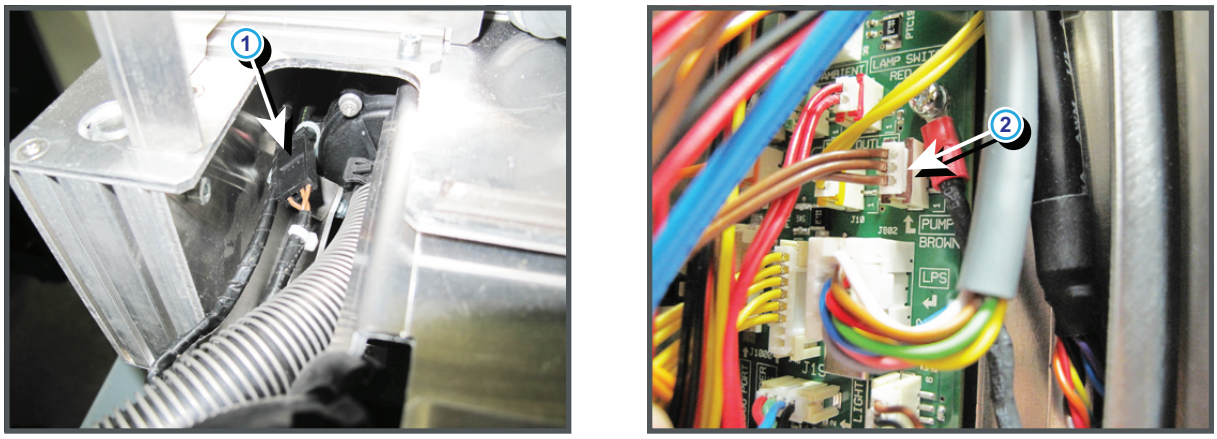


Image 18–23

## Code 5213: “pump - speed low” (Warning)

| Situation | Solution |
|---|---|
| Malfunction pump of the cooling circuit. You don't feel any vibrations when touching the pump after activating the “Refill mode” via the Communicator software. | 1. Check the electrical resistance of the pump winding. Replace the pump if infinite.<br>2. Drain the liquid cooling circuit, open the pump and check if the pump rotor is not blocked. If so, remove the rotor and clean the bearings of the pump. See service manual chapter “Liquid Cooling Circuit”, page 281. |
| Malfunction Fan Control board. | Measure voltage on pump wire while in refill mode. Voltage should be about 20V. If voltage is incorrect then replace the Fan Control board. See service manual chapter “Replacement of a Card Cage board”, page 360. |
| Pump end of life. | Replace the pump. See service manual chapter “Replacement of the Pump (RD to RD)”, page 297. |

## Code 5230: “lens zoom position - requested target not reached” (Warning)

| Situation | Solution |
|---|---|
| Manual lens installed. | Replace the manual lens with a motorized lens. |
| The activated lens file does not correspond with the lens mounted on the projector. | Activate a lens file which does correspond with the mounted lens or mount an other lens which correspond with the lens file you want to activate. |
| Corrupt lens file. | Delete the lens file and program correct lens type into communicator under Advanced/lens parameters and recreate a new lens file. Tip: perform a “Lens Homing” before creating a new lens file. Otherwise, if the lens is removed the existing lens file becomes useless. Setup all new lens files away from the maximum limitation of the lens zoom. It is possible that the lens file was originally created at the maximum or minimum zoom capabilities of the lens zoom. |
| The final lens position lays very close to the mechanical limits which disable the motorized lens position. | Position the lens manually, or reposition the projector so that the lens position lays further away from the mechanical limits, or try to use another lens which range is more suitable. Setup all new lens files away from the maximum limitation of the lens zoom. It is possible that lens file was originally created at the maximum or minimum zoom capabilities of the lens zoom. Program correct lens type into communicator under Advanced/ lens parameters and recreate the lens files. |
| Disconnected wire units (reference 2 and 3 Image 18–24) of the zoom motor of the motorized lens. | Remove the front cover of the projector and check if all wire units at the left bottom of the lens holder are connected. |
| Disconnected wire unit, of the lens zoom/shift signals, from the Signal Backplane. | Remove the front cover and front dust filter from the projector and check if the wire unit (reference 1 Image 18–24) is inserted in the Signal Backplane. |
| Malfunction Cinema Control board. | Replace the Cineam Control board. See service manual chapter “Replacement of a Card Cage board”, page 360. |
| Malfunction zoom motor of the lens. | Use the local keypad to zoom the image on the screen. If unsuccessful, replace the motorized lens. |
| Malfunction Signal Backplane (bad connection). | Replace the Signal Backplane. |
| Malfunction SMPS board which supplies power to the lens. | Replace the SMPS board. See service manual chapter “Replacement of the SMPS board”, page 368. |

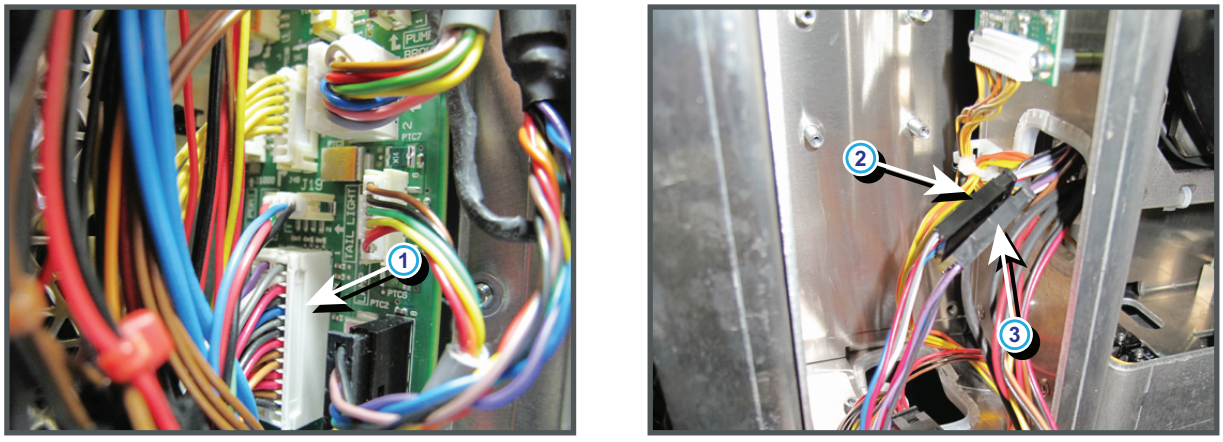


Image 18–24

## Code 5231: “lens focus position - requested target not reached” (Warning)

| Situation | Solution |
|---|---|
| The activated lens file does not correspond with the lens mounted on the projector. | Activate a lens file which does correspond with the mounted lens or mount an other lens which correspond with the lens file you want to activate. |
| Corrupt lens file. | Delete the lens file and program correct lens type into communicator under Advanced/lens parameters and recreate a new lens file. Tip: perform a “Lens Homing” before creating a new lens file. Otherwise, if the lens is removed the existing lens file becomes useless. Setup all new lens files away from the maximum limitation of the lens zoom. It is possible that the lens file was originally created at the maximum or minimum zoom capabilities of the lens zoom. |
| The final lens position lays very close to the mechanical limits which disable the motorized lens position. | Position the lens manually, or reposition the projector so that the lens position lays further away from the mechanical limits, or try to use another lens which range is more suitable. Setup all new lens files away from the maximum limitation of the lens zoom. It is possible that lens file was originally created at the maximum or minimum zoom capabilities of the lens zoom. Program correct lens type into communicator under Advanced/ lens parameters and recreate the lens files. |
| Wire unit (reference 1 Image 18–25) of the lens focus signals disconnected from the Signal Backplane. | Remove the front cover and front dust filter from the projector and check if the wire unit (reference 1 Image 18–25) is inserted in the Signal Backplane. |
| Disconnected wire unit (reference 2 Image 18–25) of the Focus Motor Driver board. | Remove the front cover of the projector and check if the wire unit (reference 2 Image 18–25) is connected with the Focus Motor Driver board. |
| Disconnected wire unit (reference 3 Image 18–26) of the focus motor of the Lens Holder. | Remove the front cover of the projector and check if the wire unit (reference 3 Image 18–26) is connected with the focus motor at the base of the Lens Holder. |
| Malfunction Cinema Control board. | Replace the Cinema Control board. See service manual chapter “Replacement of a Card Cage board”, page 360 |
| Malfunction focus motor of the Lens Holder. | Use the local keypad to focus the image on the screen. If unsuccessful, replace the motorized lens. |
| Malfunction Signal Backplane (bad connection). | Replace the Signal Backplane. |
| Malfunction SMPS board which supplies power to the lens. | Replace the SMPS board. See service manual chapter “Replacement of the SMPS board”, page 368. |

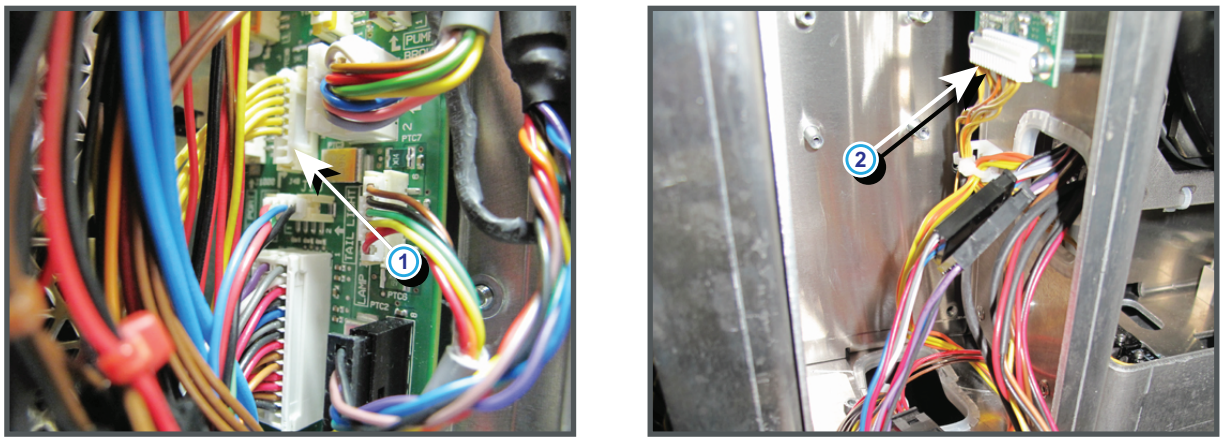


Image 18–25

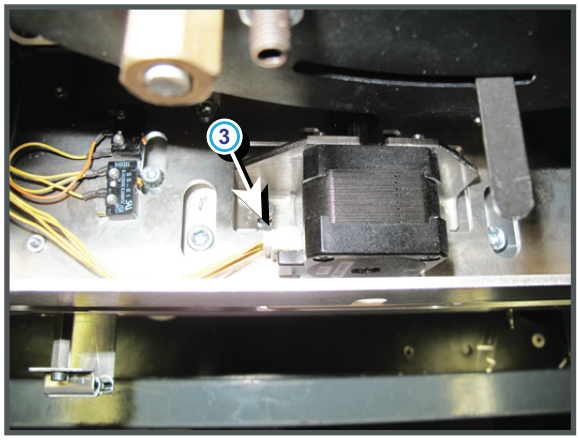


Image 18–26

## Code 5232: “lens horizontal shift position - requested target not reached” (Warning)

| Situation | Solution |
|---|---|
| The activated lens file does not correspond with the lens mounted on the projector. | Activate a lens file which does correspond with the mounted lens or mount an other lens which correspond with the lens file you want to activate. |
| Corrupt lens file. | Delete the lens file and program correct lens type into communicator under Advanced/lens parameters and recreate a new lens file. Tip: perform a “Lens Homing” before creating a new lens file. Otherwise, if the lens is removed the existing lens file becomes useless. Setup all new lens files away from the maximum limitation of the lens zoom. It is possible that the lens file was originally created at the maximum or minimum zoom capabilities of the lens zoom. |
| The final lens position lays very close to the mechanical limits which disable the motorized lens position. | Position the lens manually, or reposition the projector so that the lens position lays further away from the mechanical limits, or try to use another lens which range is more suitable. Setup all new lens files away from the maximum limitation of the lens zoom. It is possible that lens file was originally created at the maximum or minimum zoom capabilities of the lens zoom. Program correct lens type into communicator under Advanced/ lens parameters and recreate the lens files. |
| Wire unit (reference 1 Image 18–27) of the lens zoom/shift signals is disconnected from the Signal Backplane. | Remove the front cover and front dust filter from the projector and check if the wire unit (reference 1 Image 18–27) is inserted in the Signal Backplane. |

| Situation | Solution |
|---|---|
| Disconnected yellow/orange wire unit (reference 3 Image 18–27) between the Lens Holder and the Signal Backplane. | Remove the front cover of the projector and check if the yellow/orange wire unit (reference 3 Image 18–27) is connected. |
| Disconnected wire units (reference 6 & 7 Image 18–27) of the limit switches for horizontal shift. | Remove the front cover of the projector and check if the yellow/black and orange/black wire units (reference 6 & 7Image 18–27) are connected. |
| Disconnected wire unit (reference 9 Image 18–28) of the horizontal shift motor of the Lens Holder | Remove the front cover of the projector and check if the wire unit (reference 9 Image 18–28) is connected with the vertical shift motor which is located at the right side of the Lens Holder. |
| Malfunction Cinema Control board. | Replace the Cinema Control board. See service manual chapter “Replacement of a Card Cage board”, page 360. |
| Malfunction horizontal shift motor of the Lens Holder. | Use the local keypad to shift the image horizontally on the screen. If unsuccessful, replace the horizontal shift motor of the Lens Holder. See service manual chapter “Replacement of the Horizontal Shift stepper motor”, page 338 |
| Malfunction Signal Backplane (bad connection). | Replace the Signal Backplane. |
| Malfunction SMPS board which supplies power to the lens. | Replace the SMPS board. See service manual chapter “Replacement of the SMPS board”, page 368. |

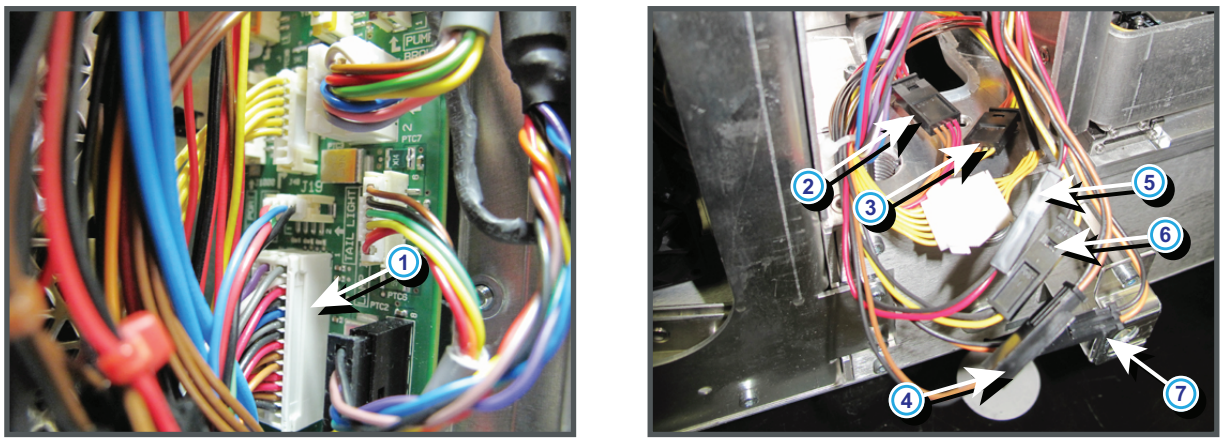

Image 18–27

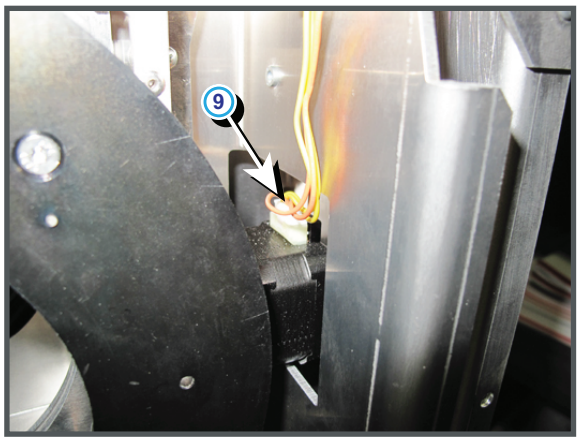


Image 18–28

## Code 5233: “lens vertical shift position - requested target not reached” (Warning)

| Situation | Solution |
|---|---|
| The activated lens file does not correspond with the lens mounted on the projector. | Activate a lens file which does correspond with the mounted lens or mount an other lens which correspond with the lens file you want to activate. |
| Corrupt lens file. | Delete the lens file and program correct lens type into communicator under Advanced/lens parameters and recreate a new lens file. Tip: perform a “Lens Homing” before creating a new lens file. Otherwise, if the lens is removed the existing lens file becomes useless. Setup all new lens files away from the maximum limitation of the lens zoom. It is possible that the lens file was originally created at the maximum or minimum zoom capabilities of the lens zoom. |
| The final lens position lays very close to the mechanical limits which disable the motorized lens position. | Position the lens manually, or reposition the projector so that the lens position lays further away from the mechanical limits, or try to use another lens which range is more suitable. Setup all new lens files away from the maximum limitation of the lens zoom. It is possible that lens file was originally created at the maximum or minimum zoom capabilities of the lens zoom. Program correct lens type into communicator under Advanced/ lens parameters and recreate the lens files. |
| Wire unit (reference 1 Image 18–29) of the lens zoom/shift signals is disconnected from the Signal Backplane. | Remove the front cover and front dust filter from the projector and check if the wire unit (reference 1 Image 18–29) is inserted in the Signal Backplane. |
| Disconnected brown/red wire unit (reference 2 Image 18–29) between the Lens Holder and the Signal Backplane. | Remove the front cover of the projector and check if the brown/red wire unit (reference 2 Image 18–29) is connected. |
| Disconnected wire units (reference 4 & 5 Image 18–29) of the limit switches for vertical shift. | Remove the front cover of the projector and check if the brown/black and red/black wire units (reference 4 & 5Image 18–29) are connected. |
| Disconnected wire unit (reference 8 Image 18–30) of the vertical shift motor of the Lens Holder | Remove the front cover of the projector and check if the wire unit (reference 8 Image 18–30) is connected with the vertical shift motor which is located at the top of the Lens Holder. |
| Malfunction Cinema Control board. | Replace the Cinema Control board. See service manual chapter “Replacement of a Card Cage board”, page 360. |

| Situation | Solution |
|---|---|
| Malfunction vertical shift motor of the Lens Holder. | Use the local keypad to shift the image vertically on the screen. If unsuccessful, replace the vertical shift motor of the Lens Holder. See service manual chapter “Replacement of the Vertical Shift stepper motor”, page 335. |
| Malfunction Signal Backplane (bad connection). | Replace the Signal Backplane. |
| Malfunction SMPS board which supplies power to the lens. | Replace the SMPS board. See service manual chapter “Replacement of the SMPS board”, page 368. |

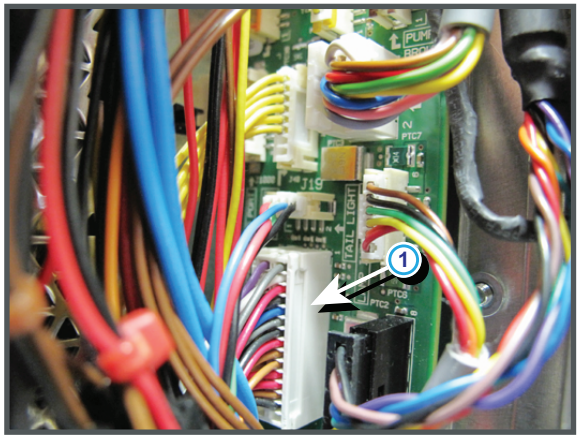


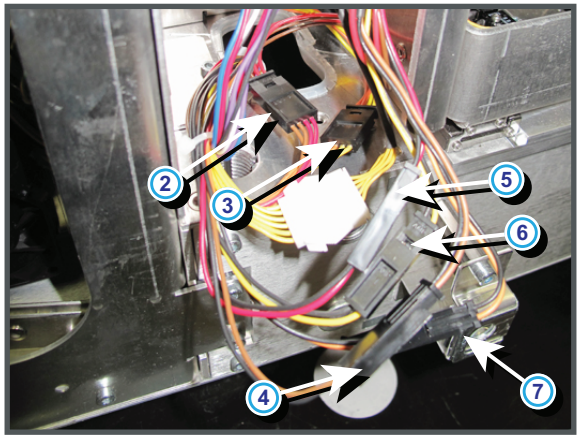


Image 18–29

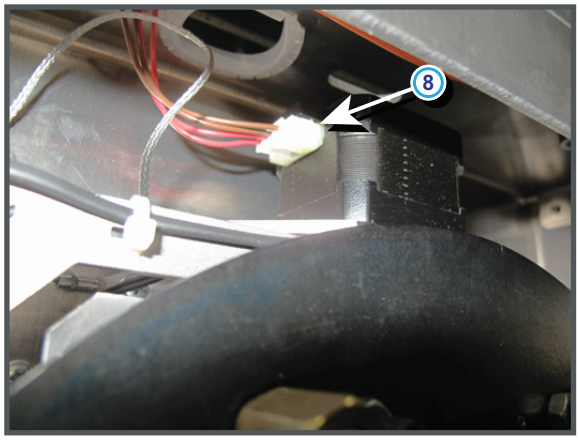


Image 18–30

## Code 5253: “dmd red fan - speed low” (Warning)

| Situation | Solution |
|---|---|
| Wire unit of the fan disconnected. | Check if the wire unit of the fan is connected with the projector wiring. See reference 1 Image 18–31.<br>Check if the wiring of the fan is connected with the signal backplane. See reference 11 Image 18–31. |
| Blocked fan. | Unblock the fan. Ensure that the fan can turn freely. |
| Damaged wire unit. | Check if the wire unit of the fan is not damaged. Repair if possible, otherwise replace with new one. |
| Fan end of life. | Replace the fan. See “Replacement of the Formatter fan(s)”, page 427. |

| Situation | Solution |
|---|---|
| Malfunction Fan Control Board | Replace the Fan Control Board. See “Replacement of a Card Cage board”, page 360. |
| Other fans are also not spinning. | Replace the SMPS Board. See “Replacement of the SMPS board”, page 368. |
| Defect Signal Backplane | Replace the Signal Backplane. |

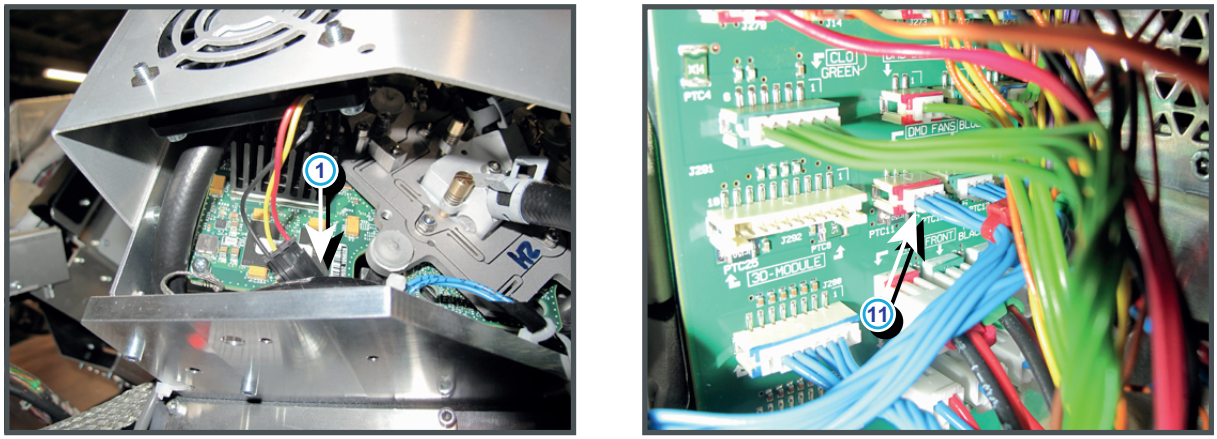


Image 18–31

## Code 5263: “dmd green fan - speed low” (Warning)

| Situation | Solution |
|---|---|
| Wire unit of the fan disconnected. | Check if the wire unit of the fan is connected with the projector wiring. See reference 2 Image 18–32.<br>Check if the wiring of the fan is connected with the signal backplane. See reference 12 Image 18–32. |
| Blocked fan. | Unblock the fan. Ensure that the fan can turn freely. |
| Damaged wire unit. | Check if the wire unit of the fan is not damaged. Repair if possible, otherwise replace with new one. |
| Fan end of life. | Replace the fan. See “Replacement of the Formatter fan(s)”, page 427. |
| Malfunction Fan Control Board | Replace the Fan Control Board. See “Replacement of a Card Cage board”, page 360. |
| Other fans are also not spinning. | Replace the SMPS Board. See “Replacement of the SMPS board”, page 368. |
| Defect Signal Backplane | Replace the Signal Backplane. |

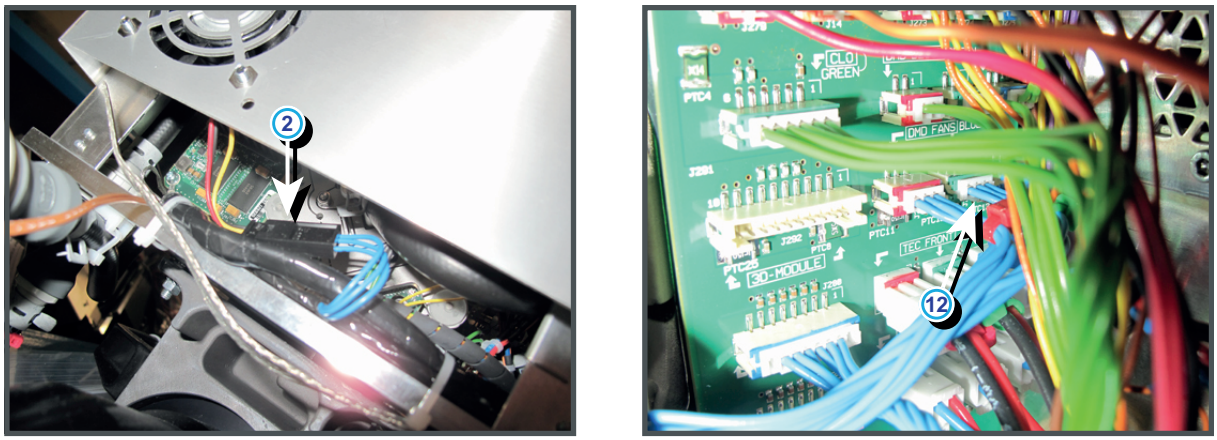


Image 18–32

## Code 5273: “dmd blue fan - speed low” (Warning)

| Situation | Solution |
|---|---|
| Wire unit of the fan disconnected. | Check if the wire unit of the fan is connected with the projector wiring. See reference 2 Image 18–33.<br>Check if the wiring of the fan is connected with the signal backplane. See reference 12 Image 18–33. |
| Blocked fan. | Unblock the fan. Ensure that the fan can turn freely. |
| Damaged wire unit. | Check if the wire unit of the fan is not damaged. Repair if possible, otherwise replace with new one. |
| Fan end of life. | Replace the fan. See “Replacement of the Formatter fan(s)”, page 427. |
| Malfunction Fan Control Board | Replace the Fan Control Board. See “Replacement of a Card Cage board”, page 360. |
| Other fans are also not spinning. | Replace the SMPS Board. See “Replacement of the SMPS board”, page 368. |
| Defect Signal Backplane | Replace the Signal Backplane. |

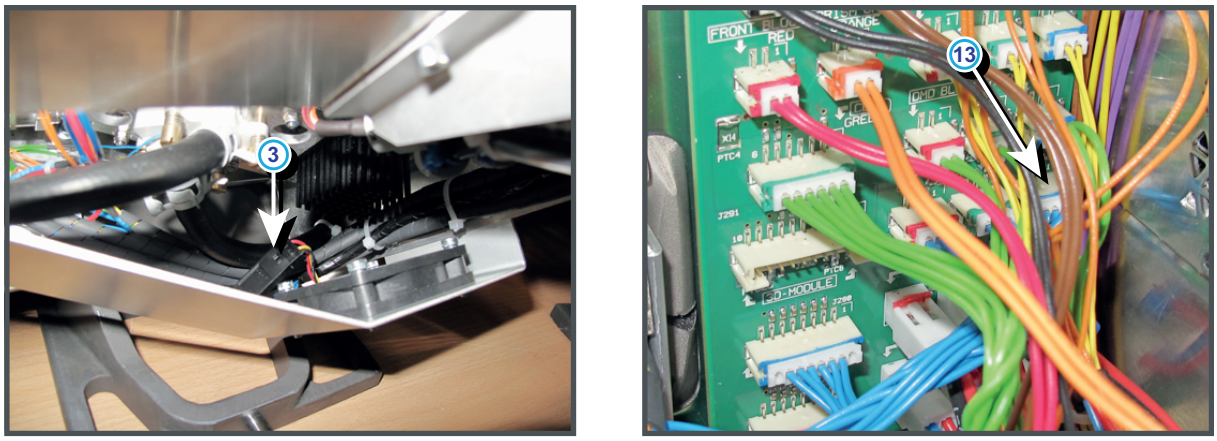


Image 18–33

## Code 5280: “ambient - temperature too high” (Error)

This error code is probably preceded by the warning code: ambient - temperature high”.

### Code 5281: “ambient - temperature high” (Warning)

| Situation | Solution |
|---|---|
| Ambient temperature too high. | Check the ambient temperature at the air inlets of the projector. Make sure that the ambient temperature does not exceed 35°C (95°F). |
| Blocked filter at the front side of the projector. | Clean the front filter or replace with new one. See service manual chapter “Remove and clean the front dust filter”, page 574. |
| Malfunction air extraction system. | Check the condition of the air extraction system. The air extraction system must be capable of removing minimum 10 m³/min or 350 CFM per installed DP2K and DP4K B series digital projector. |
| Malfunction Fan Control board. | Replace the Fan Control board. See service manual chapter “Replacement of a Card Cage board”, page 360. |

### Code 5284: “ambient - temperature sensor open” (Error)

| Situation | Solution |
|---|---|
| Malfunction Fan Control board. | Replace the Fan Control board. See service manual chapter “Replacement of a Card Cage board”, page 360. |

### Code 5285: “ambient - temperature sensor short ” (Error)

| Situation | Solution |
|---|---|
| Malfunction Fan Control board. | Replace the Fan Control board. See service manual chapter “Replacement of a Card Cage board”, page 360. |

### Code 5290: “dmd blue - temperature too high” (Error)

This error code is probably preceded by the warning code 5291: “dmd blue - temperature high”. The same troubleshooting table can be applied to.

### Code 5291: “dmd blue - temperature high” (Warning)

| Situation | Solution |
|---|---|
| Blocked filter of the Heat Exchanger. The other DMD temperatures are too high as well. | Clean filter of the heat exchanger or replace with a new oner. See service manual chapter “Remove and clean both bottom dust filters”, page 576. |
| The liquid cooling circuit of the Light Processor is mistakenly excluded from the main liquid cooling circuit. Most likely the other DMD temperatures are too high as well. | Check of the cooling circuit of the Light Processor is connected with the pump and heat exchanger. |
| The Peltier element (TEC) of the DMD in the blue channel is disconnected from the Signal Backplane. | Check if the wire unit (reference 23 Image 18–34) of the Peltier element (TEC) of the DMD in the blue channel is connected with the Signal Backplane. |
| The wire units of two Peltier elements (TEC) or there respective temperature sensors (NTC's) have been swapped. While the temperature of one DMD is too | Check if the wire units of all Peltiers (TEC) and all temperature sensors (NTC's) are plugged in there respective connector sockets on the Signal Backplane. See Image 18–34.<br>Note that there are two temperature sensors per channel. The first sensor is visible on top of the cooling block. The second sensor is located at the front of the DMD. |

| Situation | Solution |
|---|---|
| high, the other will most likely be too low. | |
| Malfunction Fan Control board or SMPS board. The LED “+VTEC” on the Fan Control board remains off. | Measure on the Signal Backplane the +VTEC voltage on pin 4, 5, 6, 7 or 8 of the connector of the black wire unit which comes from the SMPS board. See Image 18–35.<br>If the +VTEC voltage is about 16V then replace the Fan Control board. See “Replacement of a Card Cage board”, page 360. Otherwise replace the SMPS board. See “Replacement of the SMPS board”, page 368. |
| Malfunction Peltier element (TEC) of the involved DMD. Use the “diode test” of a multi-meter to check out the Peltier. Polarity doesn’t matter. The Peltier is not OK in case the measured value is higher then 0,01 volt. | Remove the Light Processor from its compartment and contact Barco for further instructions. |
| Poor assembly of DMD or Peltier + cooler block. | Remove the Light Processor from its compartment and contact Barco for further instructions. |
| Defect temperature sensor which measures the temperature at the front side of the DMD of the blue channel. | Replace the whole Light Processor Unit. Contact Barco for further instructions to repair the malfunction Light Processor Unit. It is too critical to replace this temperature sensor in the field. The replacement of this temperature sensor must be done at factory or at an authorized service center. |

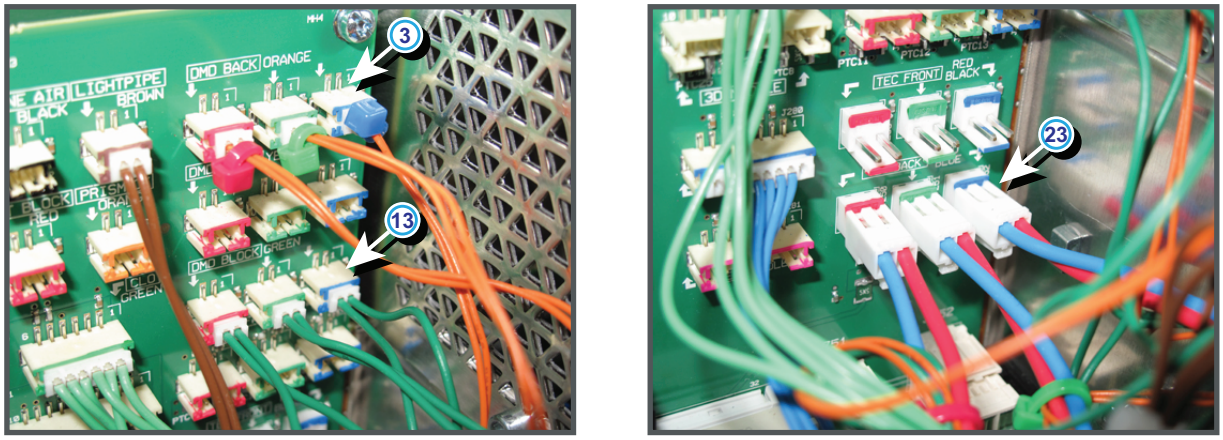


Image 18–34

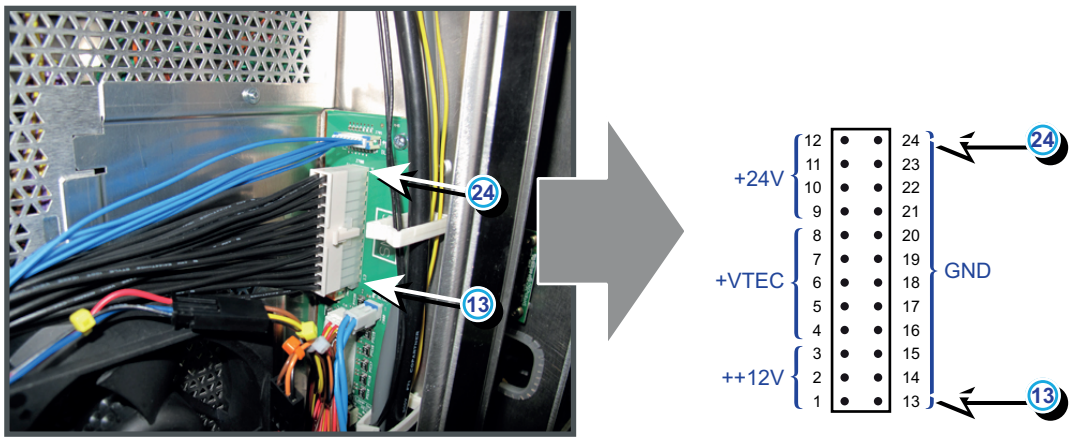


Image 18–35

## Code 5293: “dmd blue - temperature low” (Warning)

| Situation | Solution |
|---|---|
| The electronics of the Light Processor Unit remains off due to a low DMD temperature. | Make sure that the ambient temperature is within specs (higher then 10°C (50°F)). Let the projector acclimate. Do not ignite the lamp, otherwise there is a risk for condensate. |
| Defect temperature sensor which measures the temperature of the DMD of the blue channel. | Replace the whole Light Processor Unit. Contact Barco for further instructions to repair the malfunction Light Processor Unit. |

## Code 5294: “dmd blue - temperature sensor open” (Error)

| Situation | Solution |
|---|---|
| Wire unit of the temperature sensor is disconnected from the Signal Backplane. | Check if the wire unit (reference 3 Image 18–36) of the temperature sensor is plugged into its socket on the Signal Backplane. |
| Damaged wire unit of the temperature sensor (reference 3 Image 18–36) which measures the temperature of the DMD of the blue channel. | 1. Repair the wire unit.<br>2. If not repairable, replace the whole Light Processor Unit. Contact Barco for further instructions to repair the malfunction Light Processor Unit. |
| Defect temperature sensor which measures the temperature of the blue channel. | Replace the whole Light Processor Unit. Contact Barco for further instructions to repair the malfunction Light Processor Unit. It is too critical to replace this temperature sensor in the field. The replacement of this temperature sensor must be done at factory or at an authorized service center. |

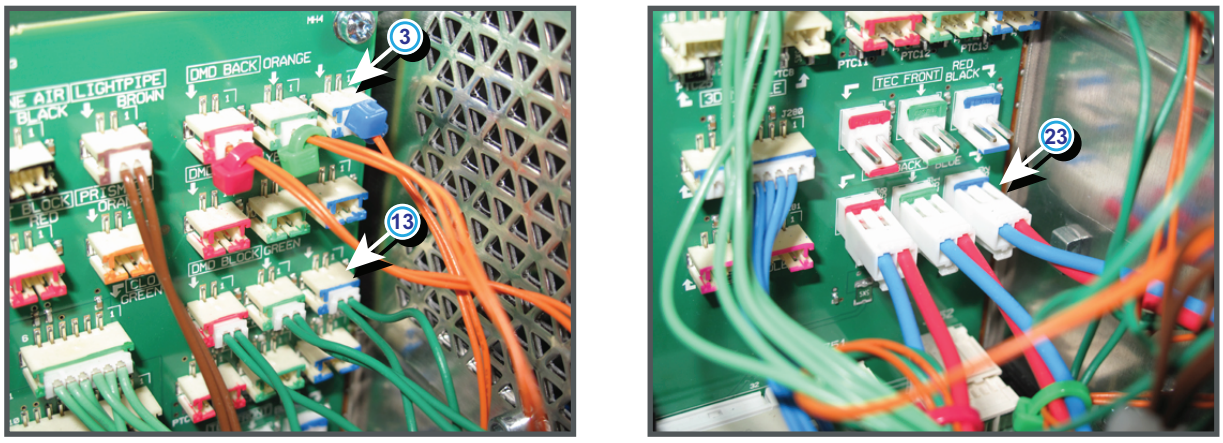


Image 18–36

## Code 5295: “dmd blue - temperature sensor short” (Error)

| Situation | Solution |
|---|---|
| Damaged wire unit of the temperature sensor (reference 3 Image 18–37) which measures the temperature of the DMD of the blue channel. | 1. Repair the wire unit.<br>2. If not repairable, replace the whole Light Processor Unit. Contact Barco for further instructions to repair the malfunction Light Processor Unit. |
| Defect temperature sensor which measures the temperature of the blue channel. | Replace the whole Light Processor Unit. Contact Barco for further instructions to repair the malfunction Light Processor Unit. It is too critical to replace this temperature sensor in the field. The replacement of this temperature sensor must be done at factory or at an authorized service center. |

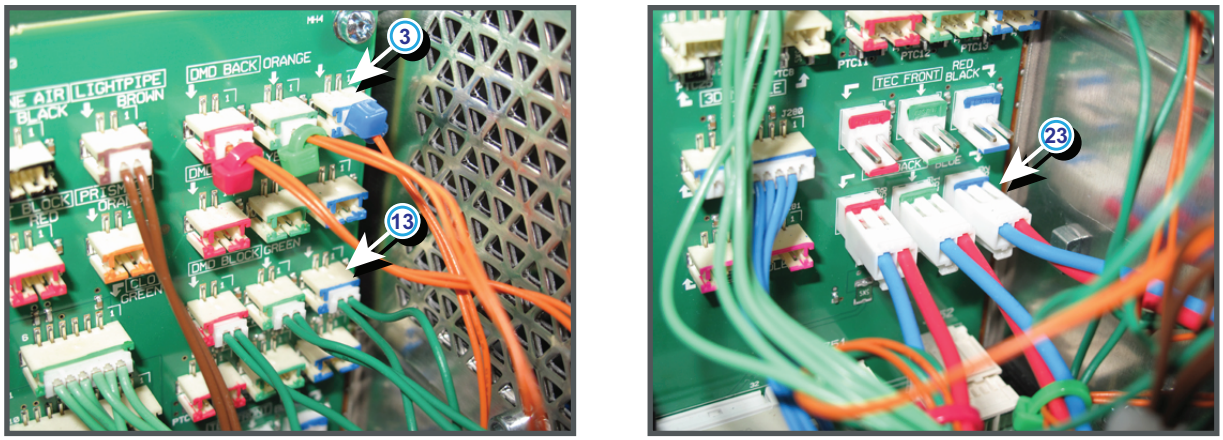


Image 18–37

## Code 5300: “dmd green - temperature too high” (Error)

This error code is probably preceded by the warning code 5301: “dmd green - temperature high”. The same troubleshooting table can be applied to.

## Code 5301: “dmd green - temperature high” (Error)

| Situation | Solution |
|---|---|
| Blocked filter of the Heat Exchanger. The other DMD temperatures are too high as well. | Clean filter of the heat exchanger or replace with a new oner. See service manual chapter “Remove and clean both bottom dust filters”, page 576. |
| The liquid cooling circuit of the Light Processor is mistakenly excluded from the main liquid cooling circuit. Most likely the other DMD temperatures are too high as well. | Check of the cooling circuit of the Light Processor is connected with the pump and heat exchanger. |
| The Peltier element (TEC) of the DMD in the green channel is disconnected from the Signal Backplane. | Check if the wire unit (reference 22 Image 18–38) of the Peltier element (TEC) of the DMD in the green channel is connected with the Signal Backplane. |
| The wire units of two Peltier elements (TEC) or there respective temperature sensors (NTC's) have been swapped. While the temperature of one DMD is too high, the other will most likely be too low. | Check if the wire units of all Peltiers (TEC) and all temperature sensors (NTC's) are plugged in there respective connector sockets on the Signal Backplane. See Image 18–38.<br>Note that there are two temperature sensors per channel. The first sensor is visible on top of the cooling block. The second sensor is located at the front of the DMD. |
| Malfunction Fan Control board or SMPS board. The LED “+VTEC” on the Fan Control board remains off. | Measure on the Signal Backplane the +VTEC voltage on pin 4, 5, 6, 7 or 8 of the connector of the black wire unit which comes from the SMPS board. See Image 18–39.<br>If the +VTEC voltage is about 16V then replace the Fan Control board. See “Replacement of a Card Cage board”, page 360. Otherwise replace the SMPS board. See “Replacement of the SMPS board”, page 368. |
| Malfunction Fan Control board. The LED “+VTEC” on the Fan Control board remains off. | Replace the Fan Control board. See “Replacement of a Card Cage board”, page 360. |
| Malfunction Peltier element (TEC) of the involved DMD. | Remove the Light Processor from its compartment and contact Barco for further instructions. |

| Situation | Solution |
|---|---|
| Use the “diode test” of a multi-meter to check out the Peltier. Polarity doesn’t matter. The Peltier is not OK in case the measured value is higher then 0,01 volt. | |
| Poor assembly of DMD or Peltier + cooler block. | Remove the Light Processor from its compartment and contact Barco for further instructions. |
| Defect temperature sensor which measures the temperature at the front side of the DMD of the green channel. | Replace the whole Light Processor Unit. Contact Barco for further instructions to repair the malfunction Light Processor Unit. It is too critical to replace this temperature sensor in the field. The replacement of this temperature sensor must be done at factory or at an authorized service center. |

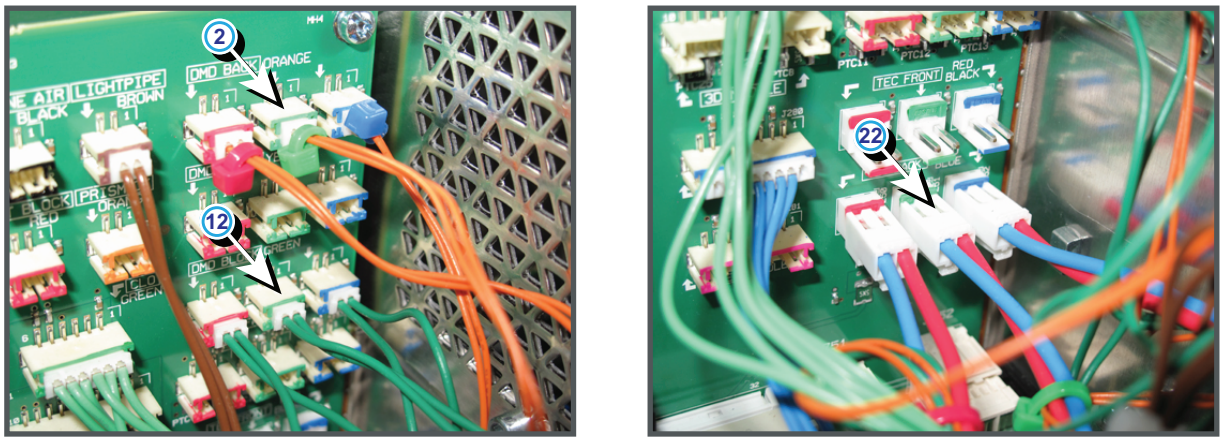


Image 18–38

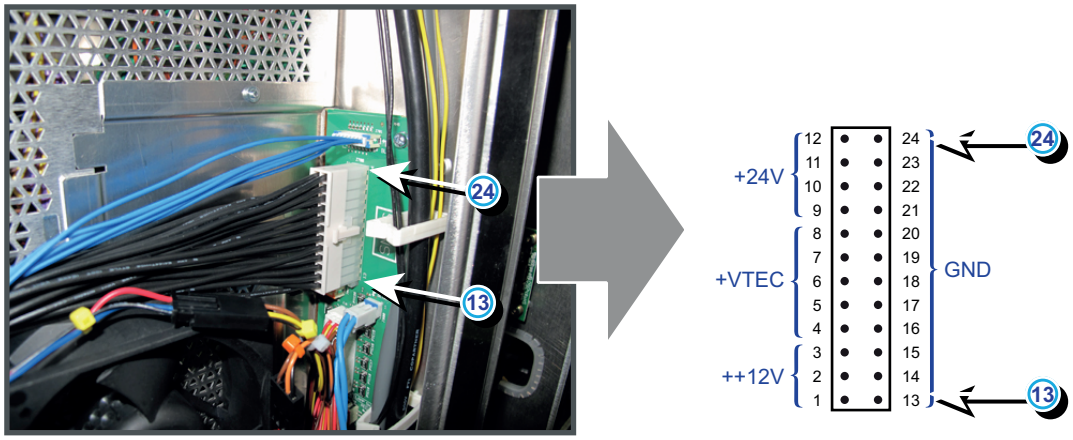


Image 18–39

## Code 5303: “dmd green - temperature low” (Warning)

| Situation | Solution |
|---|---|
| The electronics of the Light Processor Unit remains off due to a low DMD temperature. | Make sure that the ambient temperature is within specs (higher then 10°C (50°F)). Let the projector acclimate. Do not ignite the lamp, otherwise there is a risk for condensate. |
| Defect temperature sensor which measures the temperature of the DMD of the green channel. | Replace the whole Light Processor Unit. Contact Barco for further instructions to repair the malfunction Light Processor Unit. |

## Code 5304: “dmd green - temperature sensor open” (Error)

| Situation | Solution |
|---|---|
| Wire unit of the temperature sensor is disconnected from the Signal Backplane. | Check if the wire units (reference 2 Image 18–40) of the temperature sensor is plugged into its sockets on the Signal Backplane. |
| Damaged wire unit of the temperature sensor (reference 2 Image 18–40) which measures the temperature of the DMD of the green channel. | 1. Repair the wire unit.<br>2. If not repairable, replace the whole Light Processor Unit. Contact Barco for further instructions to repair the malfunction Light Processor Unit. |
| Defect temperature sensor which measures the temperature of the green channel. | Replace the whole Light Processor Unit. Contact Barco for further instructions to repair the malfunction Light Processor Unit. It is too critical to replace this temperature sensor in the field. The replacement of this temperature sensor must be done at factory or at an authorized service center. |

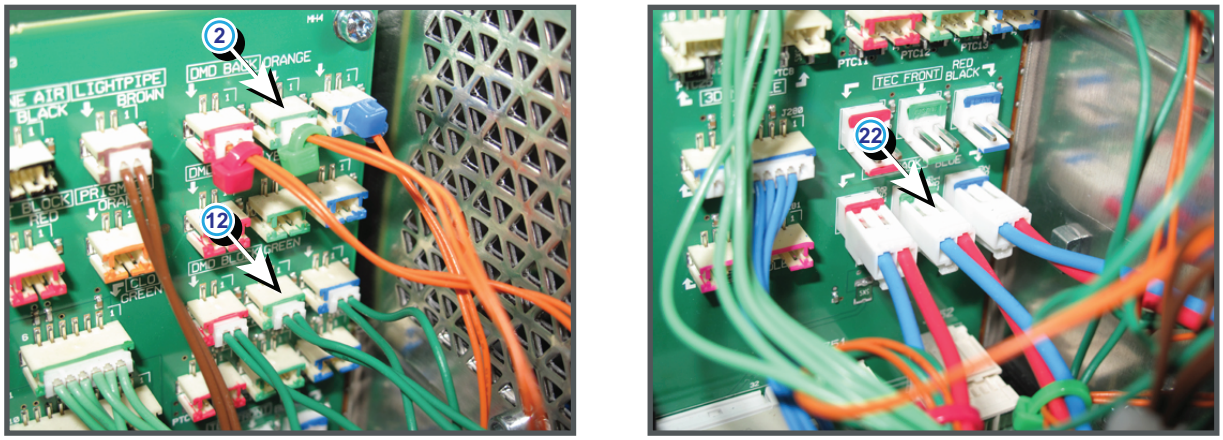


Image 18–40

## Code 5305: “dmd green - temperature sensor short” (Error)

| Situation | Solution |
|---|---|
| Damaged wire unit of the temperature sensor (reference 2 Image 18–41) which measures the temperature of the DMD of the green channel. | 1. Repair the wire unit.<br>2. If not repairable, replace the whole Light Processor Unit. Contact Barco for further instructions to repair the malfunction Light Processor Unit. |
| Defect temperature sensor which measures the temperature of the green channel. | Replace the whole Light Processor Unit. Contact Barco for further instructions to repair the malfunction Light Processor Unit. It is too critical to replace this temperature sensor in the field. The replacement of this temperature sensor must be done at factory or at an authorized service center. |

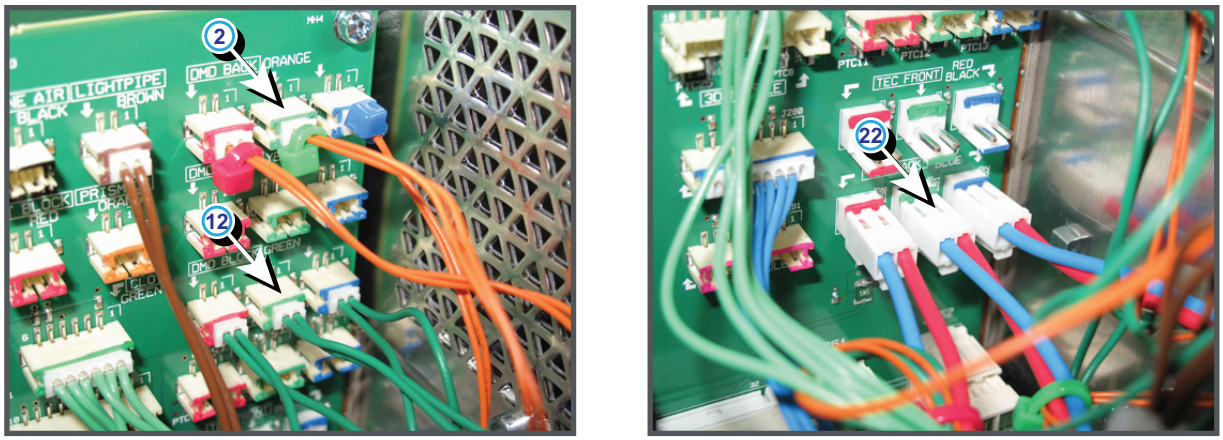


Image 18–41

## Code 5310: “lamp - temperature too high” (Error)

This error code is probably preceded by the warning code 5311: “lamp - temperature high”. The same troubleshooting table can be applied to.

## Code 5311: “lamp - temperature high” (Warning)

| Situation | Solution |
|---|---|
| Ambient temperature too high. | Check the ambient temperature at the air inlets of the projector. Make sure that the ambient temperature does not exceed 35°C (95°F). |
| Blocked filters. | Check filters. Clean filthy filters or replace with new ones. See “Dust filter maintenance”, page 573. |
| Malfunction air extraction system. | Check customer air extraction system for adequate extraction. The air extraction system must be capable of removing minimum 10 m³/min or 350 CFM per installed DP2K and DP4K B series digital projector. |
| Malfunction lamp anode fan or lamp cathode fan. | Check the speed and voltage of the lamp anode and lamp cathode fan. Replace any malfunction fan. |

## Code 5314: “lamp - temperature sensor open” (Error)

| Situation | Solution |
|---|---|
| Wire unit (reference 2 Image 18–42) of the temperature sensor is disconnected from the Signal Backplane. | Plug the wire unit of the temperature sensor into its socket on the Signal Backplane. |
| Disconnected wire (reference 1 Image 18–42) units between Signal Backplane and temperature sensor in the air outlet channel of the projector. | Check the connection between the wire units. To access this connection you have to remove the inner cover plates of the Light Processor compartment. See “Open the sealed compartment”, page 231. |
| Damaged wire unit of the temperature sensor (reference 3 Image 18–43). | 1. Repair the wire unit.<br>2. If not repairable, replace the whole wire unit and temperature sensor. |
| Defect temperature sensor (reference 3 Image 18–43). | Replace the temperature sensor. |

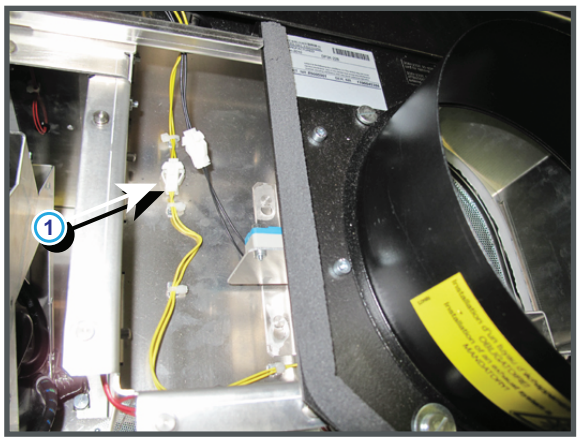


Image 18–42

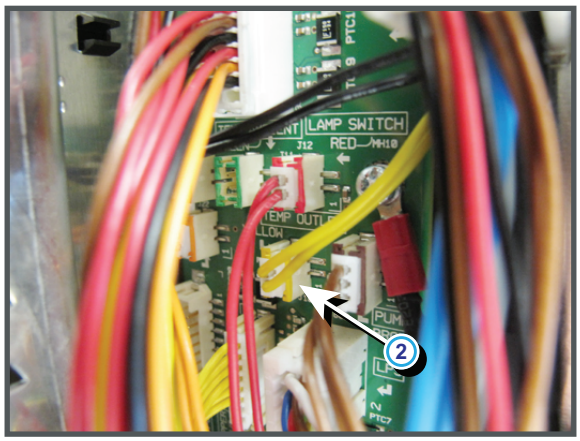


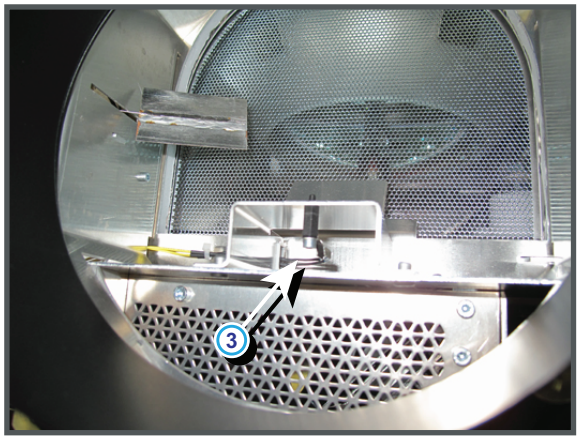


Image 18–43

## Code 5315: “lamp - temperature sensor short ” (Error)

| Situation | Solution |
|---|---|
| Damaged insulation of the wire unit of the temperature sensor (reference 3 Image 18–44), which measures the temperature in the channel of the air outlet of the Lamp House. When disconnecting the wire unit of the temperature sensor from the Signal Backplane (reference 2 Image 18–44) the error code is changed to “lamp - temperature sensor open”. | 1. Repair the insulation of the wire unit using shrink sleeve.<br>2. If not repairable, replace the whole wire unit and temperature sensor. |
| Defect temperature sensor (reference 3 Image 18–44), which measures the temperature in the channel of the air outlet of the Lamp House. When disconnecting the wire unit of the temperature sensor from the Signal Backplane (reference 2 Image 18–44 the error code is changed to “lamp - temperature sensor open”. | Replace the temperature sensor. |

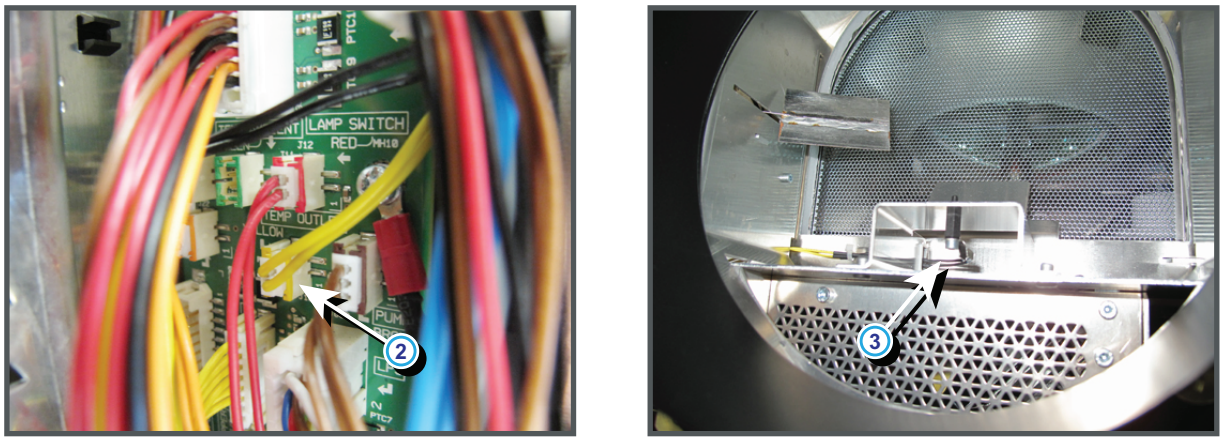


Image 18–44

## Code 5320: “fcb - force lps/lamp off” (Error)

| Situation | Solution |
|---|---|
| The Fan Control board forces to switch off the Lamp Power Supply due to an Error. This can be due to an over temperature, Lamp House not connected or the Light Processor is not connected properly. | 1. Ensure that all temperatures are within range (Light Processor, Lamp House, ambient, etc. See projector log files)<br>2. Check if the Lamp House is properly installed. Make sure that both fixation screws at the base of the Lamp House are fastened.<br>3. Check if the Light Processor is properly installed. Make sure that both fixation screws at the base of the Light Processor are fastened.<br>4. Look for other errors in the log files and try to solve them. |
| Malfunction Fan Control board. | Replace the Fan Control board. |

## Code 5331: “pfc heatsink - temperature high” (Warning)

| Situation | Solution |
|---|---|
| Ambient temperature too high. | Check the ambient temperature at the air inlets of the projector. Make sure that the ambient temperature does not exceed 35°C (95°F). |
| Blocked front filter. | Clean the filter at the front side of the projector or replace with a new one. See “Remove and clean the front dust filter”, page 574. |
| Malfunction SMPS module | Replace the SMPS module. See “Replacement of the SMPS board”, page 368. |
| Malfunction Fan Control board. | Replace the Fan Control board. See “Replacement of a Card Cage board”, page 360. |

## Code 5340: “dmd red - temperature too high” (Error)

This error code is probably preceded by the warning code 5341: “dmd red - temperature high”. The same troubleshooting table can be applied to.

## Code 5341: “dmd red - temperature high” (Warning)

| Situation | Solution |
|---|---|
| Blocked filter of the Heat Exchanger. The other DMD temperatures are too high as well. | Clean filter of the heat exchanger or replace with a new oner. See service manual chapter “Remove and clean both bottom dust filters”, page 576. |
| The liquid cooling circuit of the Light Processor is mistakenly excluded from the main liquid cooling circuit. Most likely the other DMD temperatures are too high as well. | Check of the cooling circuit of the Light Processor is connected with the pump and heat exchanger. |
| The Peltier element (TEC) of the DMD in the red channel is disconnected from the Signal Backplane. | Check if the wire unit (reference 21 Image 18–45) of the Peltier element (TEC) of the DMD in the red channel is connected with the Signal Backplane. |
| The wire unit of the temperature sensor (NTC) of the DMD in the red channel is disconnected from the Signal Backplane. | Check if the wire unit (reference 1 Image 18–45) of the temperature sensor (NTC) of the DMD in the red channel is connected with the Signal Backplane. |
| The wire units of two Peltier elements (TEC) or there respective temperature sensors (NTC's) have been swapped. While the temperature of one DMD is too high, the other will most likely be too low. | Check if the wire units of all Peltiers (TEC) and all temperature sensors (NTC's) are plugged in there respective connector sockets on the Signal Backplane. See Image 18–45.<br>Note that there are two temperature sensors per channel. The first sensor is visible on top of the cooling block. The second sensor is located at the front of the DMD. |
| Malfunction Fan Control board or SMPS board. The LED “+VTEC” on the Fan Control board remains off. | Measure on the Signal Backplane the +VTEC voltage on pin 4, 5, 6, 7 or 8 of the connector of the black wire unit which comes from the SMPS board. See Image 18–46.<br>If the +VTEC voltage is about 16V then replace the Fan Control board. See “Replacement of a Card Cage board”, page 360. Otherwise replace the SMPS board. See “Replacement of the SMPS board”, page 368. |
| Malfunction Peltier element (TEC) of the involved DMD. | Remove the Light Processor from its compartment and contact Barco for further instructions. |

| Situation | Solution |
|---|---|
| Use the “diode test” of a multi-meter to check out the Peltier. Polarity doesn’t matter. The Peltier is not OK in case the measured value is higher then 0,01 volt. | |
| Poor assembly of DMD or Peltier + cooler block. | Remove the Light Processor from its compartment and contact Barco for further instructions. |
| Defect temperature sensor which measures the temperature at the front side of the DMD of the red channel. | Replace the whole Light Processor Unit. Contact Barco for further instructions to repair the malfunction Light Processor Unit. It is too critical to replace this temperature sensor in the field. The replacement of this temperature sensor must be done at factory or at an authorized service center. |

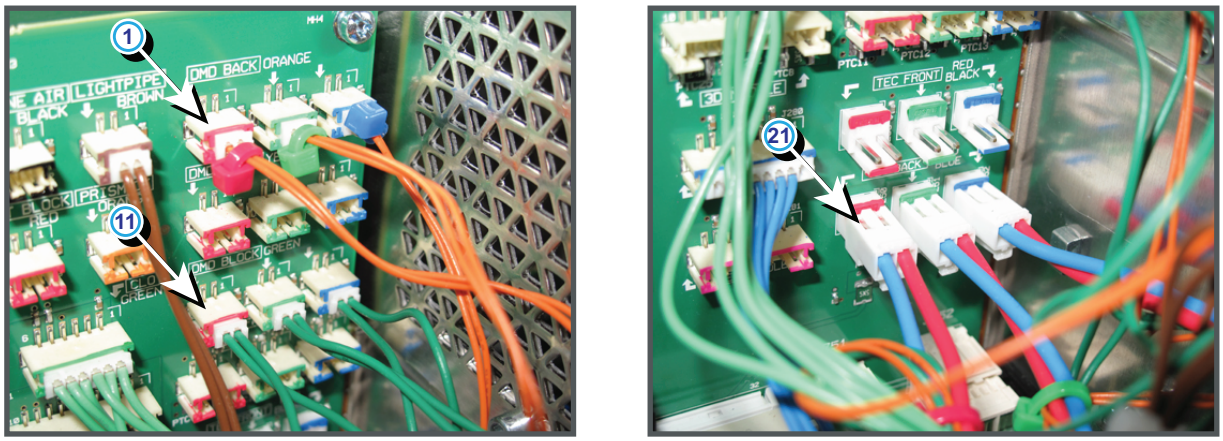


Image 18–45

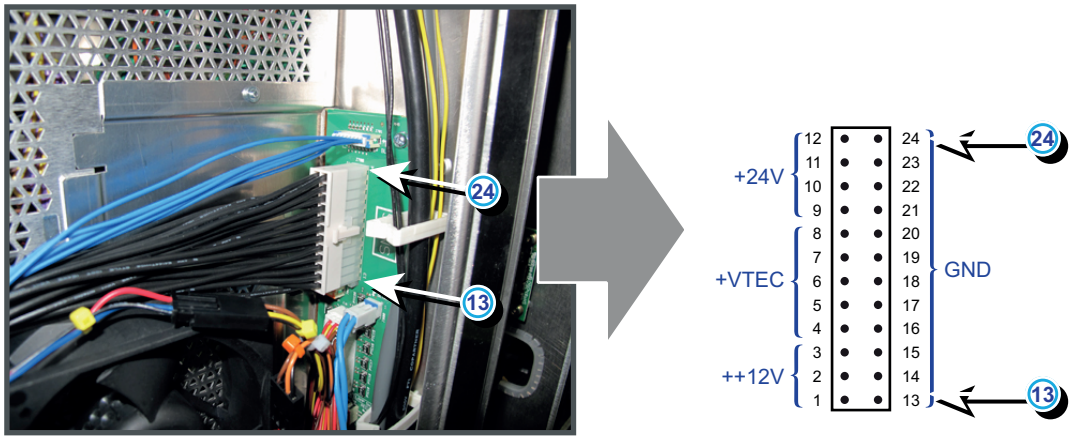


Image 18–46

## Code 5343: “dmd red - temperature low” (Warning)

| Situation | Solution |
|---|---|
| The electronics of the Light Processor Unit remains off due to a low DMD temperature. | Make sure that the ambient temperature is within specs (higher then 10°C (50°F)). Let the projector acclimate. Do not ignite the lamp, otherwise there is a risk for condensate. |
| Defect temperature sensor which measures the temperature of the DMD of the red channel. | Replace the whole Light Processor Unit. Contact Barco for further instructions to repair the malfunction Light Processor Unit. |

## Code 5344: “dmd red - temperature sensor open” (Error)

| Situation | Solution |
|---|---|
| Wire unit of the temperature sensor is disconnected from the Signal Backplane. | Check if the wire unit (reference 1 Image 18–47) of the temperature sensors is plugged into its socket on the Signal Backplane. |
| Damaged wire unit of the temperature sensor (reference 1 Image 18–47) which measures the temperature of the DMD of the red channel. | 1. Repair the wire unit.<br>2. If not repairable, replace the whole Light Processor Unit. Contact Barco for further instructions to repair the malfunction Light Processor Unit. |
| Defect temperature sensor which measures the temperature of the red channel. | Replace the whole Light Processor Unit. Contact Barco for further instructions to repair the malfunction Light Processor Unit. It is too critical to replace this temperature sensor in the field. The replacement of this temperature sensor must be done at factory or at an authorized service center. |

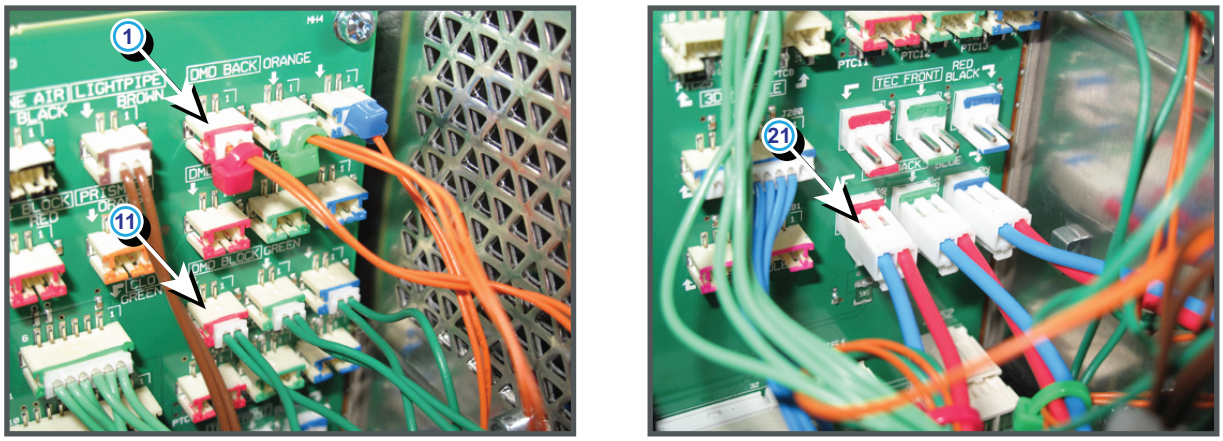


Image 18–47

## Code 5345: “dmd red - temperature sensor short” (Error)

| Situation | Solution |
|---|---|
| Damaged wire unit of the temperature sensor (reference 1 Image 18–48) which measures the temperature of the DMD of the red channel. | 1. Repair the wire unit.<br>2. If not repairable, replace the whole Light Processor Unit. Contact Barco for further instructions to repair the malfunction Light Processor Unit. |
| Defect temperature sensor which measures the temperature of the red channel. | Replace the whole Light Processor Unit. Contact Barco for further instructions to repair the malfunction Light Processor Unit. It is too critical to replace this temperature sensor in the field. The replacement of this temperature sensor must be done at factory or at an authorized service center. |

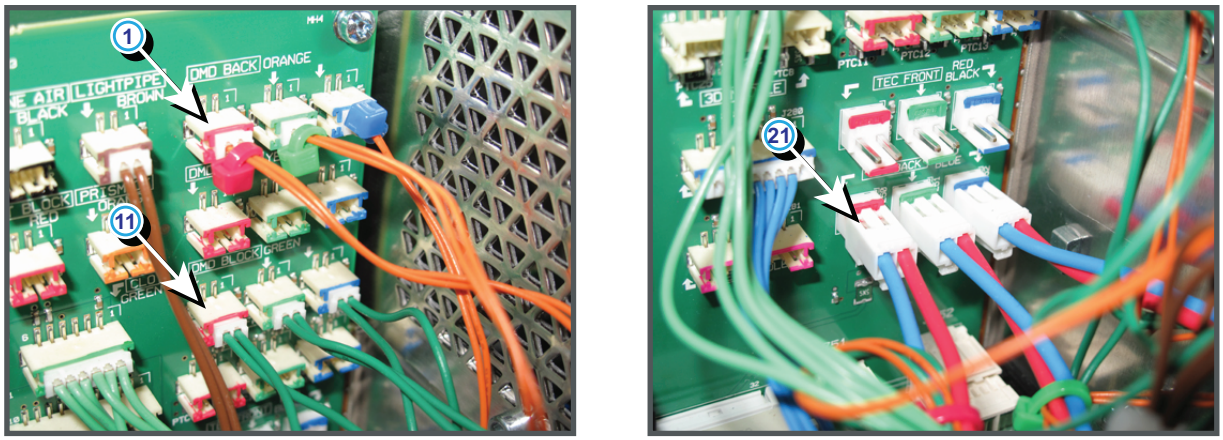


Image 18–48

## Code 5351: “smps primary heatsink - temperature high” (Warning)

| Situation | Solution |
|---|---|
| Ambient temperature too high. | Check the ambient temperature at the air inlets of the projector. Make sure that the ambient temperature does not exceed 35°C (95°F). |
| Blocked front filter. | Clean the filter at the front side of the projector or replace with a new one. |
| Malfunction SMPS module | Replace the SMPS module. See “Replacement of the SMPS board”, page 368. |
| Malfunction Fan Control board. | Replace the Fan Control board. See “Replacement of a Card Cage board”, page 360. |

## Code 5361: “smps secundary heatsink - temperature high” (Warning)

| Situation | Solution |
|---|---|
| Ambient temperature too high. | Check the ambient temperature at the air inlets of the projector. Make sure that the ambient temperature does not exceed 35°C (95°F). |
| Blocked front filter. | Clean the filter at the front side of the projector or replace with a new one. |
| Malfunction SMPS module | Replace the SMPS module. See “Replacement of the SMPS board”, page 368. |
| Malfunction Fan Control board. | Replace the Fan Control board. See “Replacement of a Card Cage board”, page 360. |

## Code 5364: “smps secundary heatsink - temperature sensor open ” (Error)

| Situation | Solution |
|---|---|
| Malfunction SMPS module | Replace the SMPS module. See “Replacement of the SMPS board”, page 368. |

## Code 5365: “smps secundary heatsink - temperature sensor short” (Error)

| Situation | Solution |
|---|---|
| Malfunction SMPS module | Replace the SMPS module. See “Replacement of the SMPS board”, page 368. |

## Code 5431: “cold mirror fan - voltage high” (Warning)

| Situation | Solution |
|---|---|
| Malfunction Fan Control board or SMPS board. | Measure on the Signal Backplane the +24V voltage on pin 9, 10, 11 or 12 of the connector of the black wire unit which comes from the SMPS board. See Image 18–49.<br>If the measured voltage is about 24V then replace the Fan Control board. See “Replacement of a Card Cage board”, page 360. Otherwise replace the SMPS board. See “Replacement of the SMPS board”, page 368. |

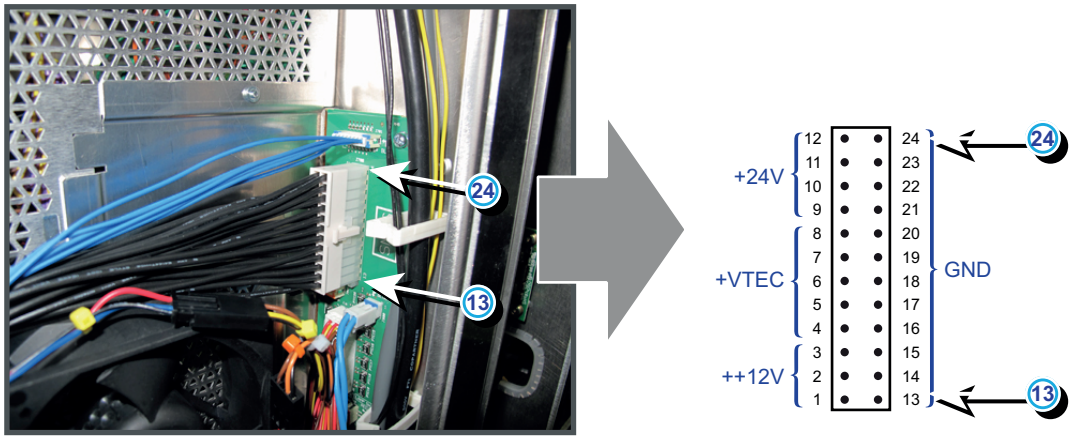


Image 18–49

## Code 5432: “cold mirror fan - voltage too low” (Error)

This error code is probably preceded by the warning code 5433: “cold mirror fan - voltage low”. The same troubleshooting table can be applied to.

## Code 5433: “cold mirror fan - voltage low” (Warning)

| Situation | Solution |
|---|---|
| Malfunction Fan Control board or SMPS board. | Measure on the Signal Backplane the +24V voltage on pin 9, 10, 11 or 12 of the connector of the black wire unit which comes from the SMPS board. See Image 18–50.<br>If the measured voltage is about 24V then replace the Fan Control board. See “Replacement of a Card Cage board”, page 360. Otherwise replace the SMPS board. See “Replacement of the SMPS board”, page 368. |
| Short circuit or bad connection. | 1. Check the Signal Backplane for bad connections. Ensure that all wire units are well connected.<br>(Note that the +24V supply is generated on the SMPS board and enters the Fan Control board and Cinema Control board via the Signal Backplane)<br>2. Check the wiring (reference 1 Image 18–119) of the Anode fan (reference 2 Image 18–119) for short circuits.<br>3. Check the wiring (reference 3 Image 18–119) of the Cathode fan (reference 4 Image 18–119) for short circuits. |
| Damaged insulation of the brown/red wire unit (reference 1 Image 18–51) of the cold mirror fan (reference 2 Image 18–51). | Remove the left cover of the projector and pull out the fan assembly below the Cold Mirror and SPG unit. Check the insulation of the wire unit of the left fan in the assembly.<br>1. Repair the insulation of the wire unit using shrink sleeve.<br>2. If the wire unit of the fan is not repairable, replace the Cold Mirror fan. See “Replacement of the Cold Mirror assembly”, page 199. |
| Malfunction Signal Backplane (bad connection) | Replace the Signal Backplane. |

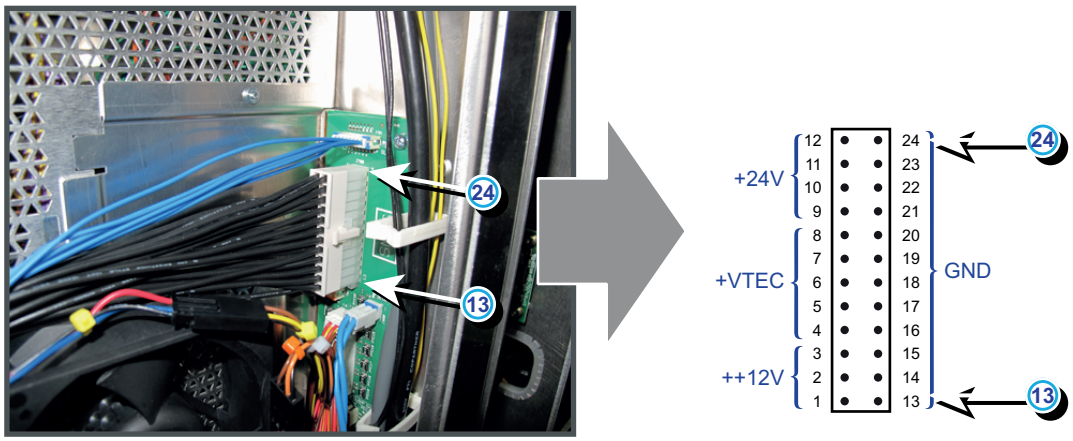


Image 18–50

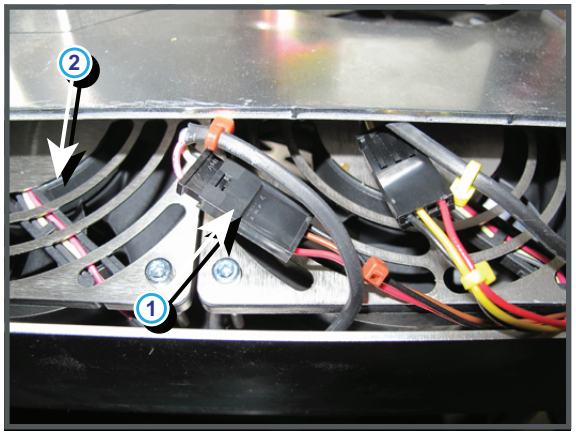


Image 18–51

## Code 5441: “engine fan - voltage high” (Warning)

| Situation | Solution |
|---|---|
| Malfunction Fan Control board or SMPS board. | Measure on the Signal Backplane the +24V voltage on pin 9, 10, 11 or 12 of the connector of the black wire unit which comes from the SMPS board. See Image 18–52.<br>If the measured voltage is about 24V then replace the Fan Control board. See “Replacement of a Card Cage board”, page 360. Otherwise replace the SMPS board. See “Replacement of the SMPS board”, page 368. |

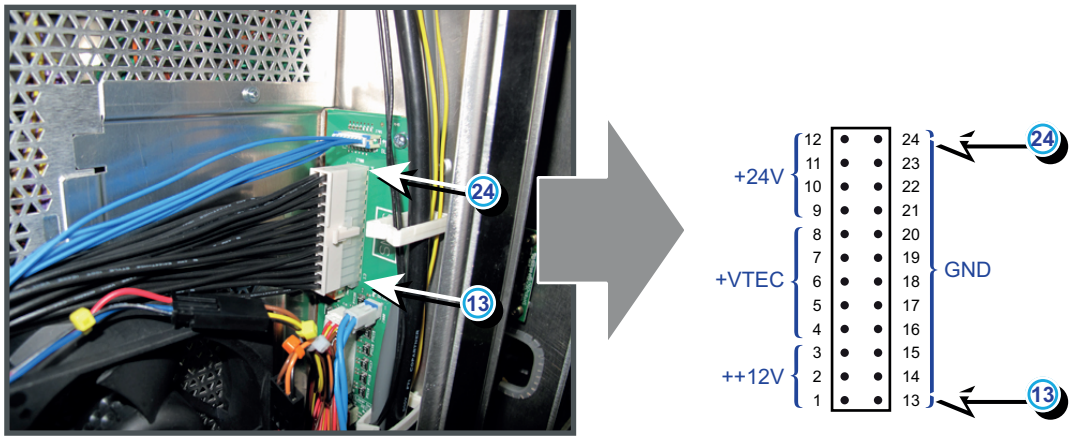


Image 18–52

## Code 5442: “engine fan - voltage too low” (Error)

This error code is probably preceded by the warning code 5443: “engine fan - voltage low”. The same troubleshooting table can be applied to.

## Code 5443: “engine fan - voltage low” (Warning)

| Situation | Solution |
|---|---|
| Malfunction Fan Control board or SMPS board. | Measure on the Signal Backplane the +24V voltage on pin 9, 10, 11 or 12 of the connector of the black wire unit which comes from the SMPS board. See Image 18–53.<br>If the measured voltage is about 24V then replace the Fan Control board. See “Replacement of a Card Cage board”, page 360. Otherwise replace the SMPS board. See “Replacement of the SMPS board”, page 368. |
| Short circuit or bad connection. | 1. Check the Signal Backplane for bad connections. Ensure that all wire units are well connected.<br>(Note that the +24V supply is generated on the SMPS board and enters the Fan Control board and Cinema Control board via the Signal Backplane)<br>2. Check the wiring (reference 1 Image 18–119) of the Anode fan (reference 2 Image 18–119) for short circuits.<br>3. Check the wiring (reference 3 Image 18–119) of the Cathode fan (reference 4 Image 18–119) for short circuits. |
| Damaged insulation of the wire unit (reference 1 Image 18–54) of the Light Processor fan (reference 2 Image 18–54). Note that this fan is located between the Card Cage compartment and Light Processor compartment. | Check the insulation of the wire unit of the fan. The fan is accessible via the Card Cage.<br>1. Repair the insulation of the wire unit using shrink sleeve.<br>2. If not repairable, replace the whole wire unit and/or fan. See “Replacement of the Light Processor fan”, page 424. |
| Malfunction Signal Backplane (bad connection) | Replace the Power Backplane. |

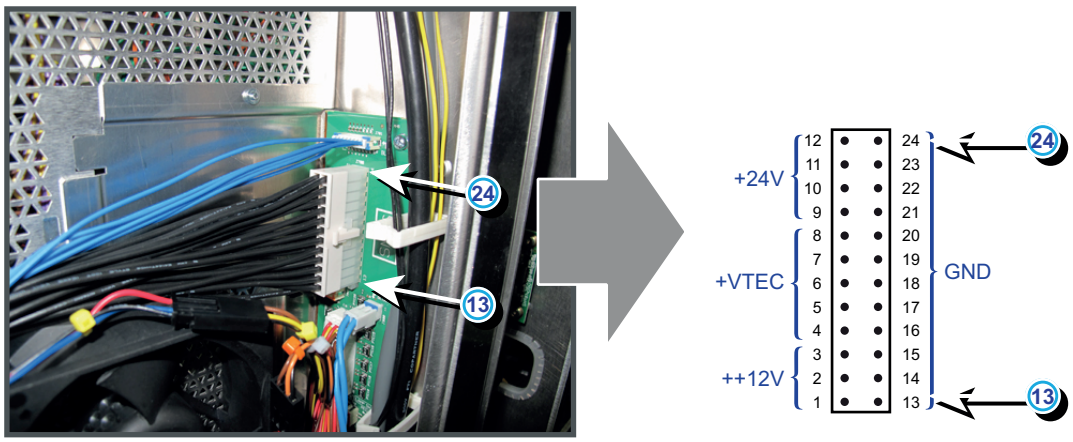


Image 18–53

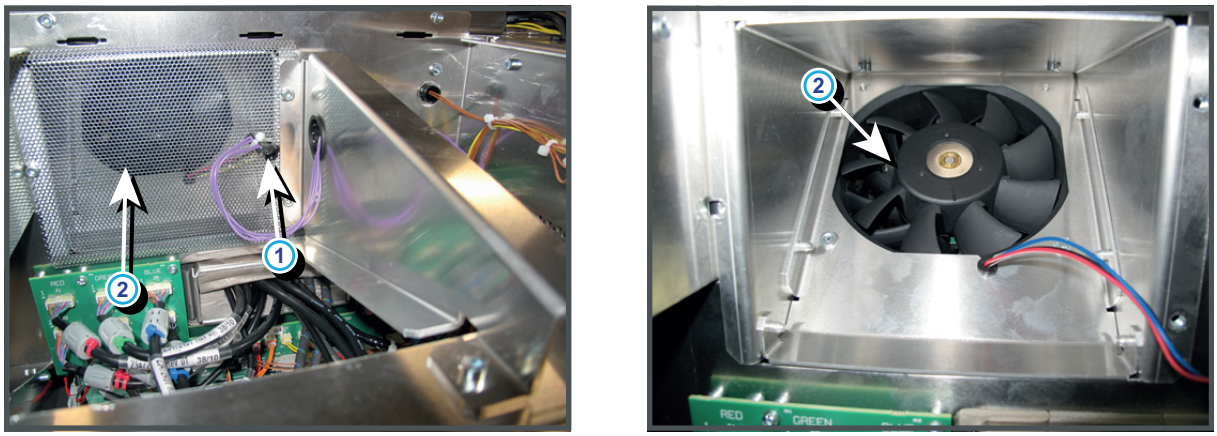


Image 18–54

## Code 5451: “heat exchanger fan - voltage high” (Warning)

| Situation | Solution |
|---|---|
| Malfunction Fan Control board or SMPS board. | Measure on the Signal Backplane the +24V voltage on pin 9, 10, 11 or 12 of the connector of the black wire unit which comes from the SMPS board. See Image 18–55.<br>If the measured voltage is about 24V then replace the Fan Control board. See “Replacement of a Card Cage board”, page 360. Otherwise replace the SMPS board. See “Replacement of the SMPS board”, page 368. |

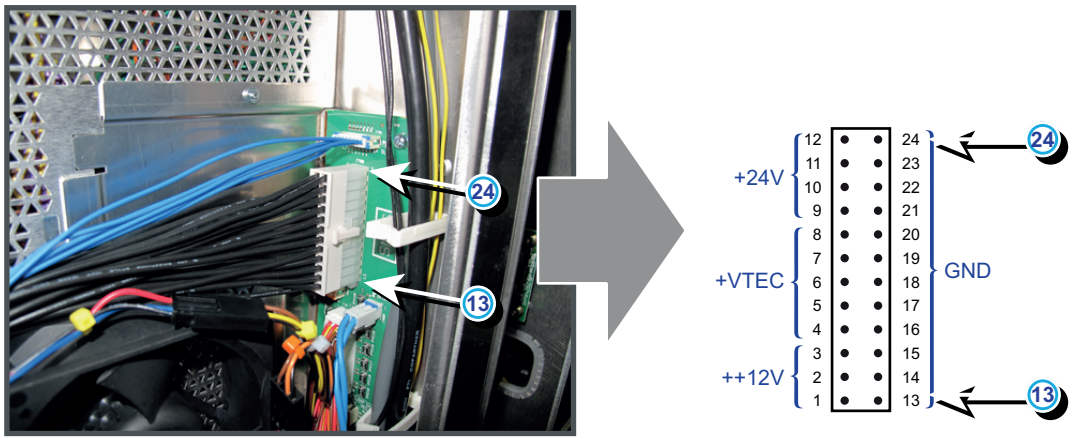


Image 18–55

## Code 5452: “heat exchanger fan - voltage too low” (Error)

This error code is probably preceded by the warning code 5453: “heat exchanger fan - voltage low”. The same troubleshooting table can be applied to.

## Code 5453: “heat exchanger fan - voltage low” (Warning)

| Situation | Solution |
|---|---|
| Malfunction Fan Control board or SMPS board. | Measure on the Signal Backplane the +24V voltage on pin 9, 10, 11 or 12 of the connector of the black wire unit which comes from the SMPS board. See Image 18–56.<br>If the measured voltage is about 24V then replace the Fan Control board. See “Replacement of a Card Cage board”, page 360. Otherwise replace the SMPS board. See “Replacement of the SMPS board”, page 368. |
| Short circuit or bad connection. | 1. Check the Signal Backplane for bad connections. Ensure that all wire units are well connected. |

| Situation | Solution |
|---|---|
| | (Note that the +24V supply is generated on the SMPS board and enters the Fan Control board and Cinema Control board via the Signal Backplane)<br>2. Check the wiring (reference 1 Image 18–119) of the Anode fan (reference 2 Image 18–119) for short circuits.<br>3. Check the wiring (reference 3 Image 18–119) of the Cathode fan (reference 4 Image 18–119) for short circuits. |
| Damaged insulation of the wire units (reference 1 Image 18–57) of the fans (reference 2 Image 18–57) of the Heat Exchanger. | Remove the left cover of the projector and pull out the Heat Exchanger assembly. Check the insulation of the wire units of the fans in the assembly.<br>1. Repair the insulation of the wire unit using shrink sleeve.<br>2. If the wire unit of the fan is not repairable, replace the fan. See “Replacement of the Heat Exchanger fans”, page 429. |
| Malfunction Signal Backplane (bad connection) | Replace the Signal Backplane. |

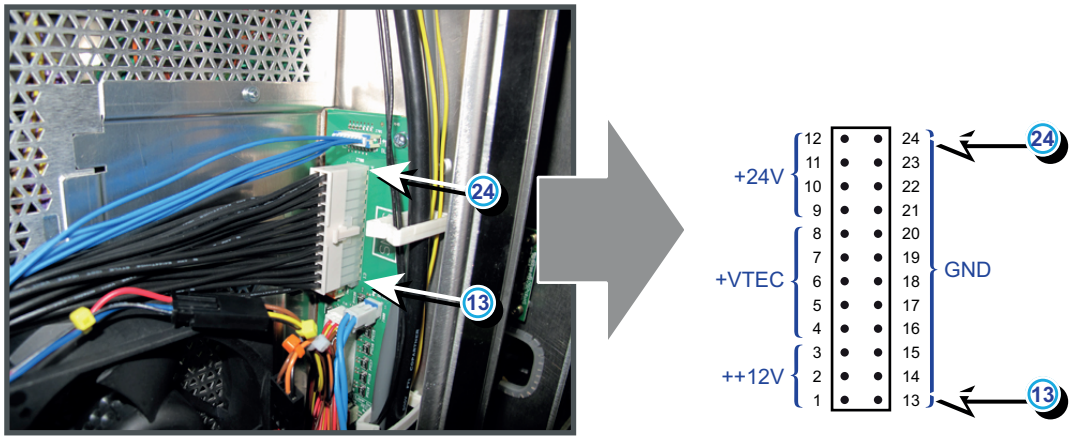


Image 18–56

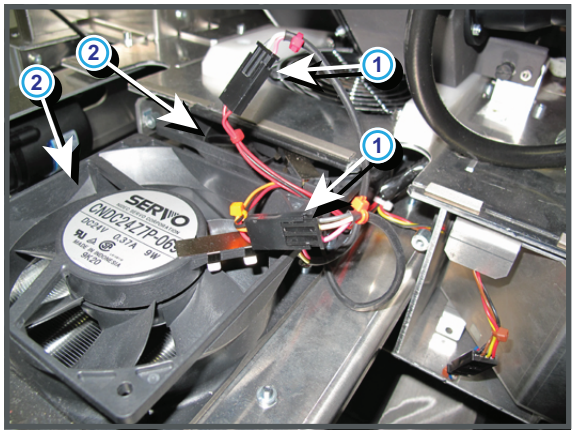


Image 18–57

## Code 5461: “lamp anode fan - voltage high” (Warning)

| Situation | Solution |
|---|---|
| Malfunction Fan Control board or SMPS board. | Measure on the Signal Backplane the +24V voltage on pin 9, 10, 11 or 12 of the connector of the black wire unit which comes from the SMPS board. See Image 18–58.<br>If the measured voltage is about 24V then replace the Fan Control board. See “Replacement of a Card Cage board”, page 360. Otherwise replace the SMPS board. See “Replacement of the SMPS board”, page 368. |

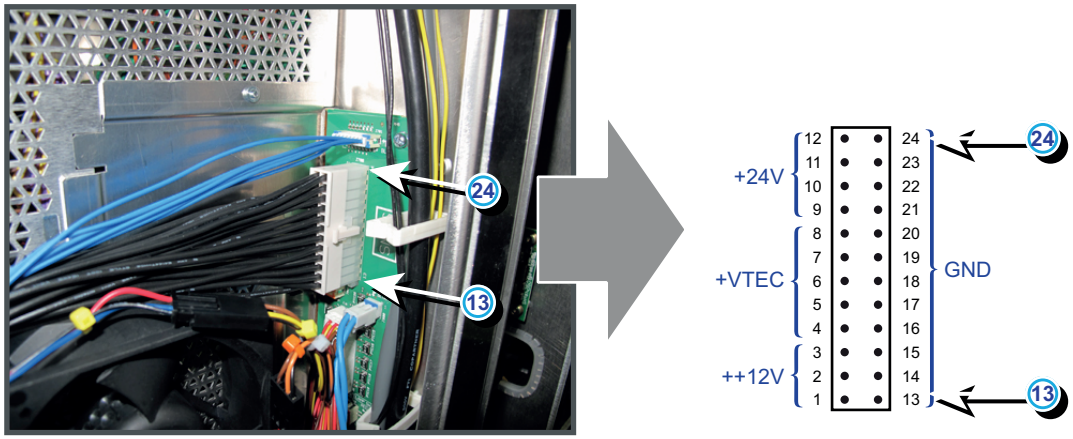


Image 18–58

## Code 5462: “lamp anode fan - voltage too low” (Error)

This error code is probably preceded by the warning code 5463: “lamp anode fan - voltage low”. The same troubleshooting table can be applied to.

## Code 5463: “lamp anode fan - voltage low” (Warning)

| Situation | Solution |
|---|---|
| Malfunction Fan Control board or SMPS board. | Measure on the Signal Backplane the +24V voltage on pin 9, 10, 11 or 12 of the connector of the black wire unit which comes from the SMPS board. See Image 18–59.<br>If the measured voltage is about 24V then replace the Fan Control board. See “Replacement of a Card Cage board”, page 360. Otherwise replace the SMPS board. See “Replacement of the SMPS board”, page 368. |
| Damaged insulation of the wire unit (reference 1 Image 18–60) of the Anode fan (reference 2 Image 18–60). | Check the insulation of the wire unit of the Anode fan. The Anode fan is located below the compartment of the Light Processor.<br>1. Repair the insulation of the wire unit using shrink sleeve.<br>2. If not repairable replace the Anode fan. See “Replacement of the Anode fan”, page 433. |
| Malfunction Signal Backplane (bad connection) | Replace the Signal Backplane. |

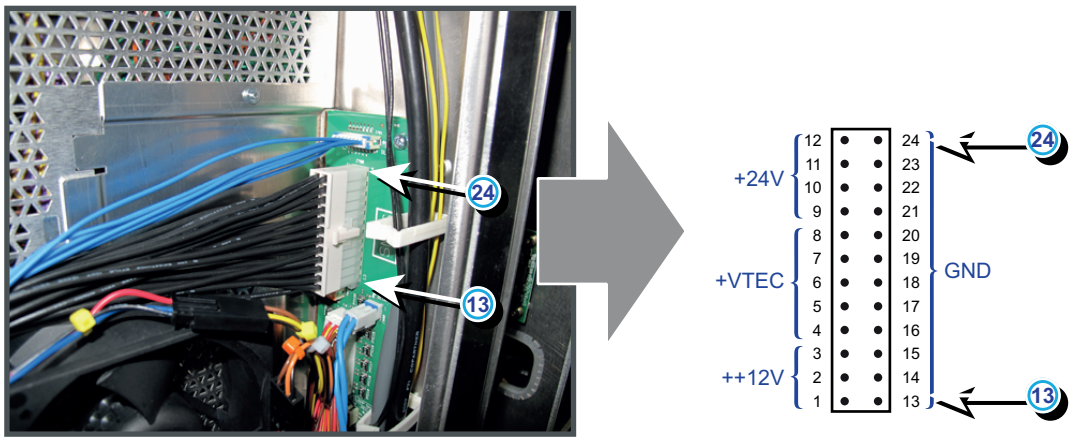


Image 18–59

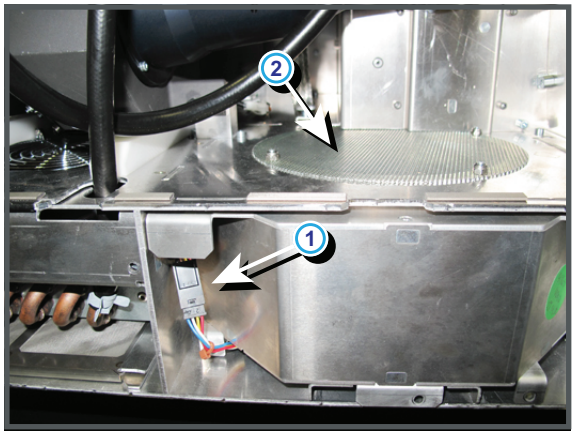


Image 18–60

## Code 5471: “lamp cathode fan - voltage high” (Warning)

| Situation | Solution |
|---|---|
| Malfunction Fan Control board or SMPS board. | Measure on the Signal Backplane the +24V voltage on pin 9, 10, 11 or 12 of the connector of the black wire unit which comes from the SMPS board. See Image 18–61.<br>If the measured voltage is about 24V then replace the Fan Control board. See “Replacement of a Card Cage board”, page 360. Otherwise replace the SMPS board. See “Replacement of the SMPS board”, page 368. |

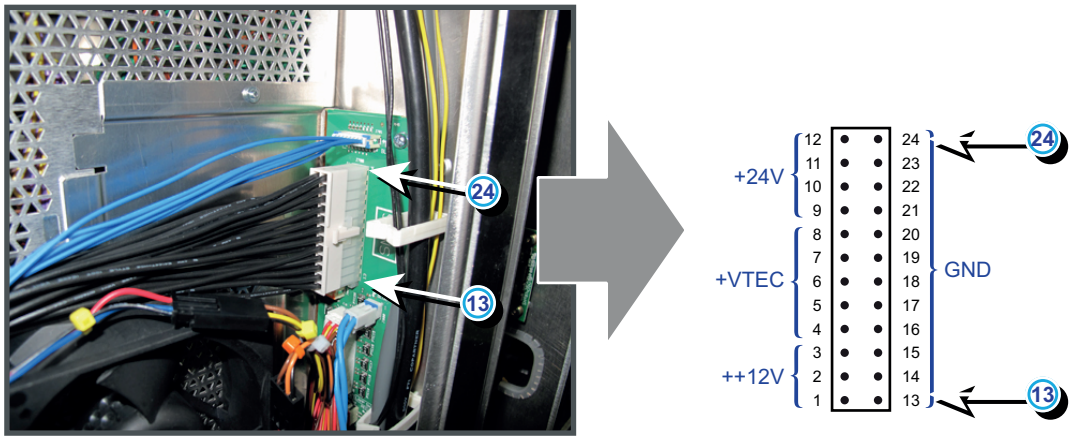


Image 18–61

## Code 5472: “lamp cathode fan - voltage too low” (Error)

This error code is probably preceded by the warning code 5473: “lamp cathode fan - voltage low”. The same troubleshooting table can be applied to.

## Code 5473: “lamp cathode fan - voltage low” (Warning)

| Situation | Solution |
|---|---|
| Malfunction Fan Control board or SMPS board. | Measure on the Signal Backplane the +24V voltage on pin 9, 10, 11 or 12 of the connector of the black wire unit which comes from the SMPS board. See Image 18–62.<br>If the measured voltage is about 24V then replace the Fan Control board. See “Replacement of a Card Cage board”, page 360. Otherwise replace the SMPS board. See “Replacement of the SMPS board”, page 368. |
| Damaged insulation of the wire unit (reference 1 Image 18–63) of the Cathode fan (reference 2 Image 18–63). | Check the insulation of the wire unit of the Cathode fan. The Cathode fan is located at the right inner side of the Lamp compartment.<br>1. Repair the insulation of the wire unit using shrink sleeve.<br>2. If not repairable replace the Cathode fan. See “Replacement of the Cathode fan”, page 438. |
| Malfunction Signal Backplane (bad connection) | Replace the Signal Backplane. |

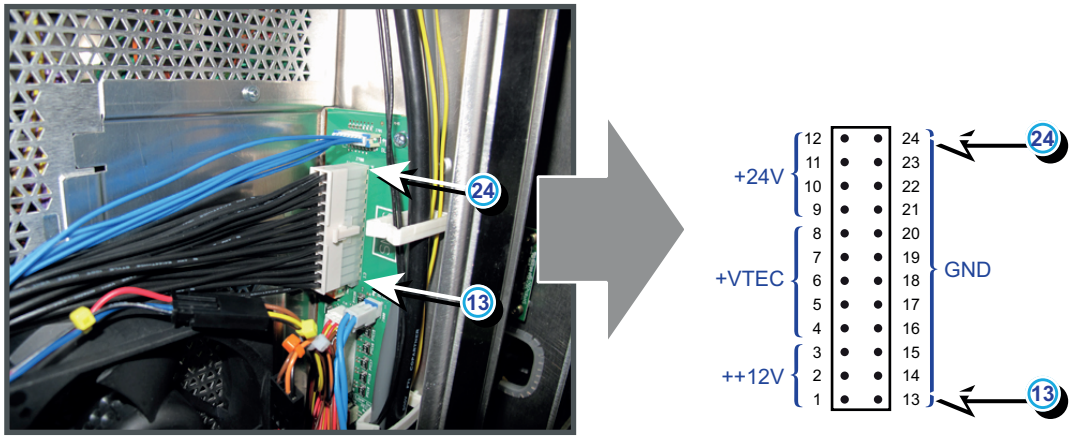


Image 18–62

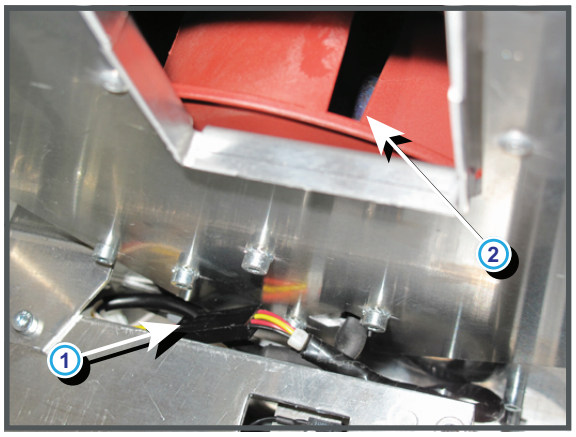


Image 18–63

## Code 5491: “smps fan - voltage high” (Warning)

| Situation | Solution |
|---|---|
| Malfunction Fan Control board or SMPS board. | Measure on the Signal Backplane the +24V voltage on pin 9, 10, 11 or 12 of the connector of the black wire unit which comes from the SMPS board. See Image 18–64.<br>If the measured voltage is about 24V then replace the Fan Control board. See “Replacement of a Card Cage board”, page 360. Otherwise replace the SMPS board. See “Replacement of the SMPS board”, page 368. |

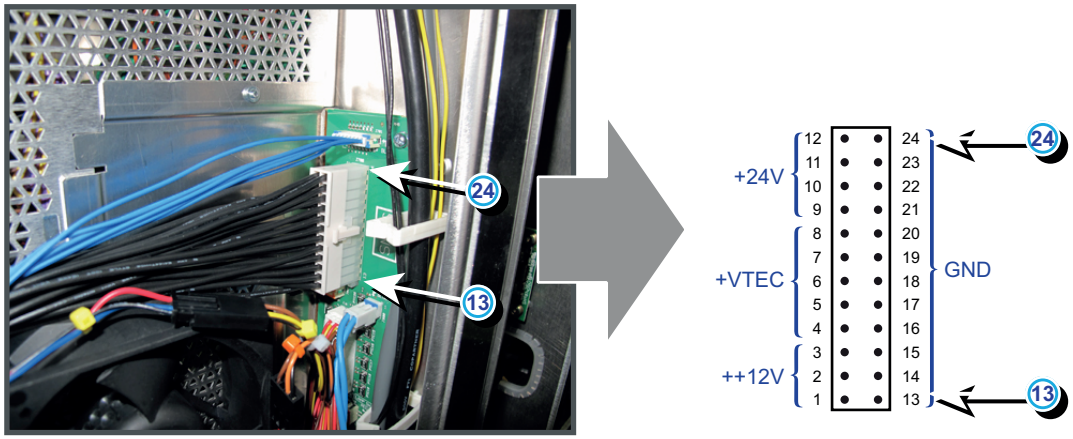


Image 18–64

## Code 5492: “smps fan - voltage too low” (Error)

This error code is probably preceded by the warning code 5493: “smps fan - voltage low”. The same troubleshooting table can be applied to.

## Code 5493: “smps fan - voltage low” (Warning)

| Situation | Solution |
|---|---|
| Malfunction Fan Control board or SMPS board. | Measure on the Signal Backplane the +24V voltage on pin 9, 10, 11 or 12 of the connector of the black wire unit which comes from the SMPS board. See Image 18–65.<br>If the measured voltage is about 24V then replace the Fan Control board. See “Replacement of a Card Cage board”, page 360. Otherwise replace the SMPS board. See “Replacement of the SMPS board”, page 368. |
| Short circuit or bad connection. | 1. Check the Signal Backplane for bad connections. Ensure that all wire units are well connected.<br>(Note that the +24V supply is generated on the SMPS board and enters the Fan Control board and Cinema Control board via the Signal Backplane)<br>2. Check the wiring (reference 1 Image 18–119) of the Anode fan (reference 2 Image 18–119) for short circuits.<br>3. Check the wiring (reference 3 Image 18–119) of the Cathode fan (reference 4 Image 18–119) for short circuits. |
| Damaged insulation of the wire unit (reference 1 & 3 Image 18–66) of the SMPS fans (reference 2 & 4 Image 18–66). | Check the insulation of the wire unit of the SMPS fans. The two SMPS fans are located behind the front filter (two lower fans).<br>1. Repair the insulation of the wire unit using shrink sleeve.<br>2. If not repairable replace the Cathode fan. |
| Malfunction Signal Backplane (bad connection) | Replace the Signal Backplane. |

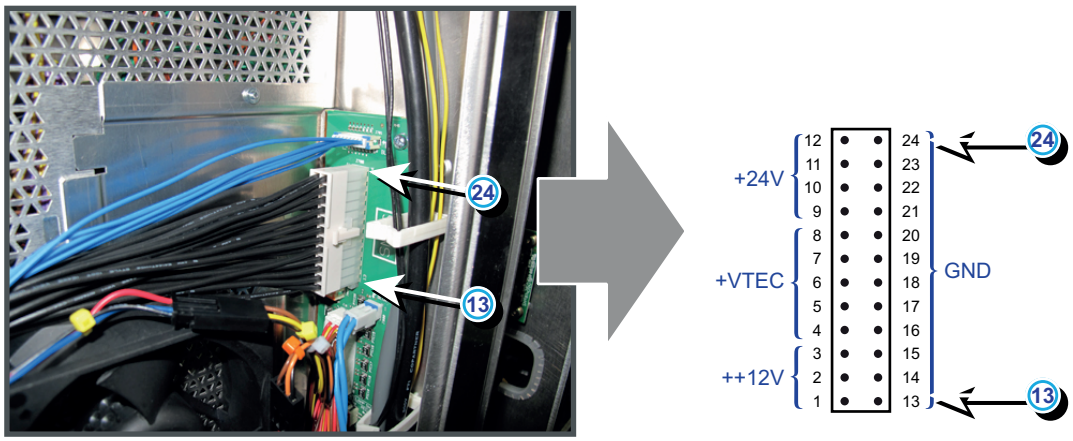


Image 18–65

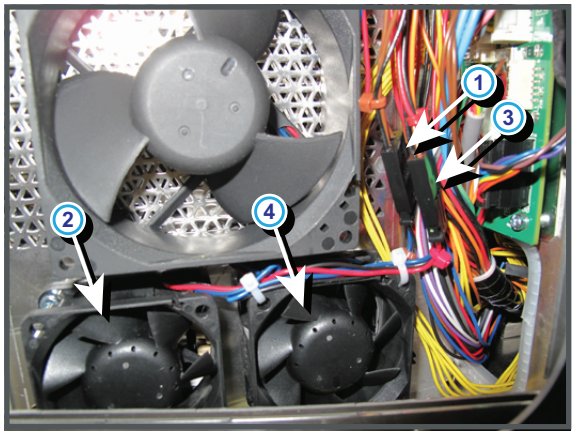


Image 18–66

## Code 5531: “pump - voltage high” (Warning)

| Situation | Solution |
|---|---|
| Malfunction Fan Control board or SMPS board. | Measure on the Signal Backplane the +24V voltage on pin 9, 10, 11 or 12 of the connector of the black wire unit which comes from the SMPS board. See Image 18–67.<br>If the measured voltage is about 24V then replace the Fan Control board. See “Replacement of a Card Cage board”, page 360. Otherwise replace the SMPS board. See “Replacement of the SMPS board”, page 368. |

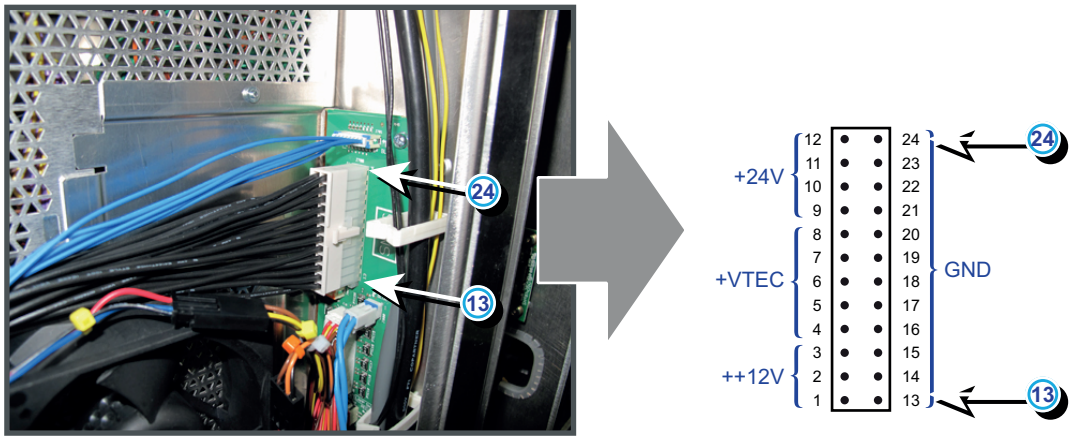


Image 18–67

## Code 5532: “pump - voltage too low” (Error)

This error code is probably preceded by the warning code 5533: “pump - voltage low”. The same troubleshooting table can be applied to.

## Code 5533: “pump - voltage low” (Warning)

| Situation | Solution |
|---|---|
| Malfunction Fan Control board or SMPS board. | Measure on the Signal Backplane the +24V voltage on pin 9, 10, 11 or 12 of the connector of the black wire unit which comes from the SMPS board. See Image 18–68.<br>If the measured voltage is about 24V then replace the Fan Control board. See “Replacement of a Card Cage board”, page 360. Otherwise replace the SMPS board. See “Replacement of the SMPS board”, page 368. |
| Short circuit or bad connection. | 1. Check the Signal Backplane for bad connections. Ensure that all wire units are well connected.<br>(Note that the +24V supply is generated on the SMPS board and enters the Fan Control board and Cinema Control board via the Signal Backplane)<br>2. Check the wiring (reference 1 Image 18–119) of the Anode fan (reference 2 Image 18–119) for short circuits.<br>3. Check the wiring (reference 3 Image 18–119) of the Cathode fan (reference 4 Image 18–119) for short circuits. |
| Damaged insulation of the wire unit (reference 1 Image 18–69) of the pump (reference 2 Image 18–69). | Pull the cooling assembly a few cm out of the projector chassis and check the insulation of the wire unit of the pump.<br>1. Repair the insulation of the wire unit using shrink sleeve.<br>2. If not repairable replace the pump. See “Replacement of the Pump (RD to RD)”, page 297. |
| Malfunction Signal Backplane (bad connection) | Replace the Signal Backplane. |

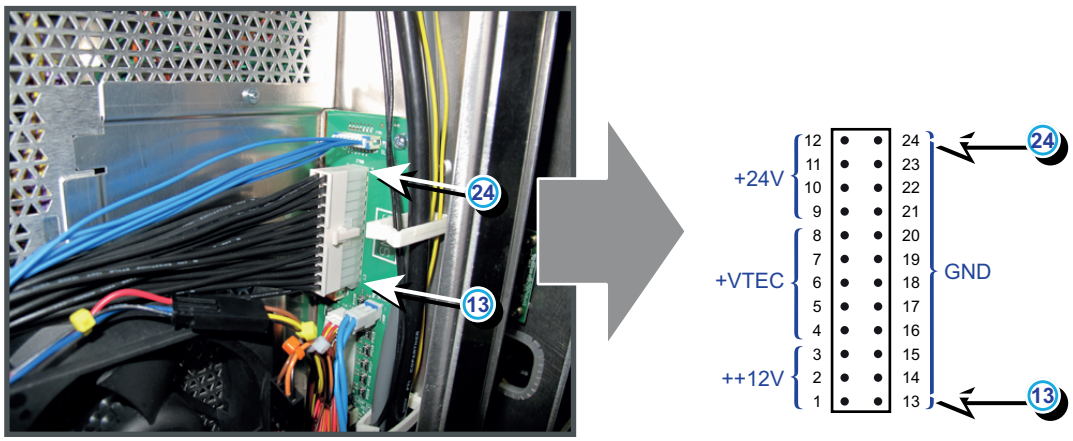

Image 18–68

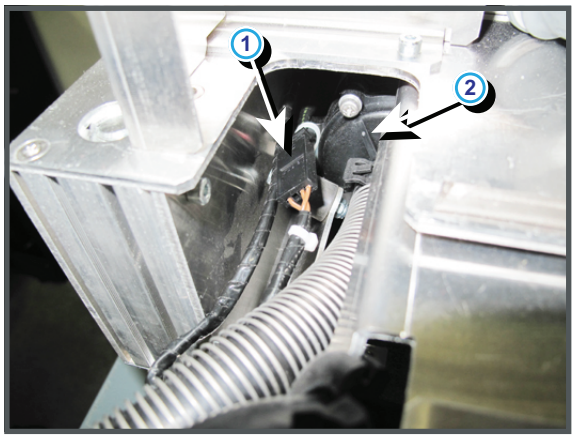


Image 18–69

## Code 5551: “tec - voltage high” (Warning)

| Situation | Solution |
|---|---|
| Malfunction Fan Control board or SMPS board. | Measure on the Signal Backplane the +VTEC voltage on pin 4, 5, 6, 7 or 8 of the connector of the black wire unit which comes from the SMPS board. See Image 18–70.<br>If the +VTEC voltage is about 16V then replace the Fan Control board. See “Replacement of a Card Cage board”, page 360. Otherwise replace the SMPS board. See “Replacement of the SMPS board”, page 368. |

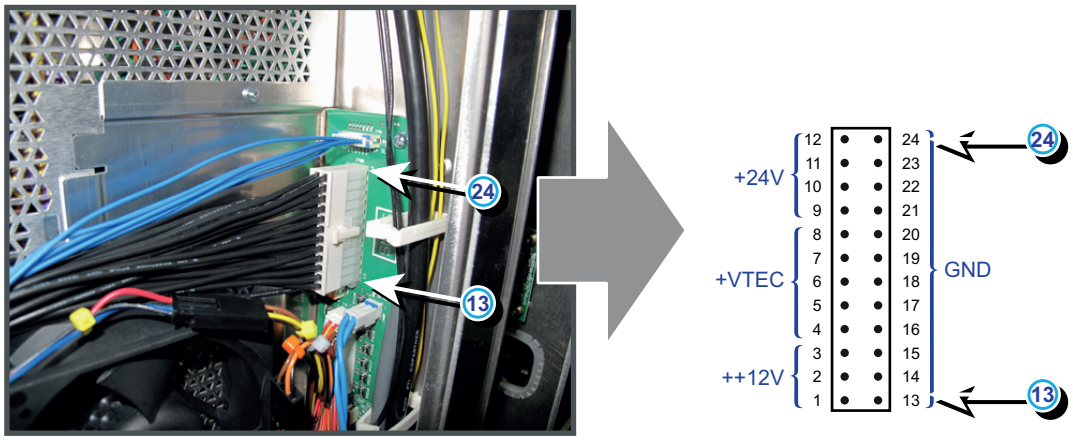


Image 18–70

## Code 5553: “tec - voltage low” (Warning)

| Situation | Solution |
|---|---|
| Damaged insulation of the wire unit of one of the three Peltier elements (TEC) causing a short circjvdyuit with the projector chassis (reference 1 Image 18–71). Disconnecting the wire unit of the damaged Peltier element from the Signal Backplane will clear the warning. | Check the wire units of each Peltier element.<br>1. Repair the insulation of the wire unit using shrink sleeve.<br>2. If not repairable, replace the Light Processor unit. Return the malfunction Light Processor to factory for repair. See “Sealed Light Processor assembly”, page 225. |
| One of the Peltier elements causes a short circuit. | Replace the Light Processor unit. Return the malfunction Light Processor to factory for repair. See “Sealed Light Processor assembly”, page 225. |
| Malfunction Fan Control board or SMPS board. | Measure on the Signal Backplane the +VTEC voltage on pin 4, 5, 6, 7 or 8 of the connector of the black wire unit which comes from the SMPS board. See Image 18–72.<br>If the +VTEC voltage is about 16V then replace the Fan Control board. See “Replacement of a Card Cage board”, page 360. Otherwise replace the SMPS board. See “Replacement of the SMPS board”, page 368. |

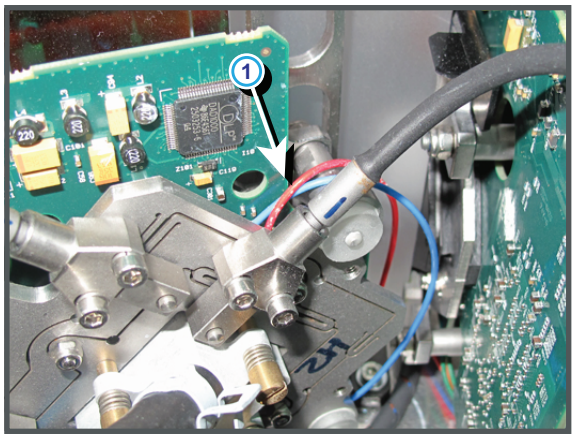


Image 18–71

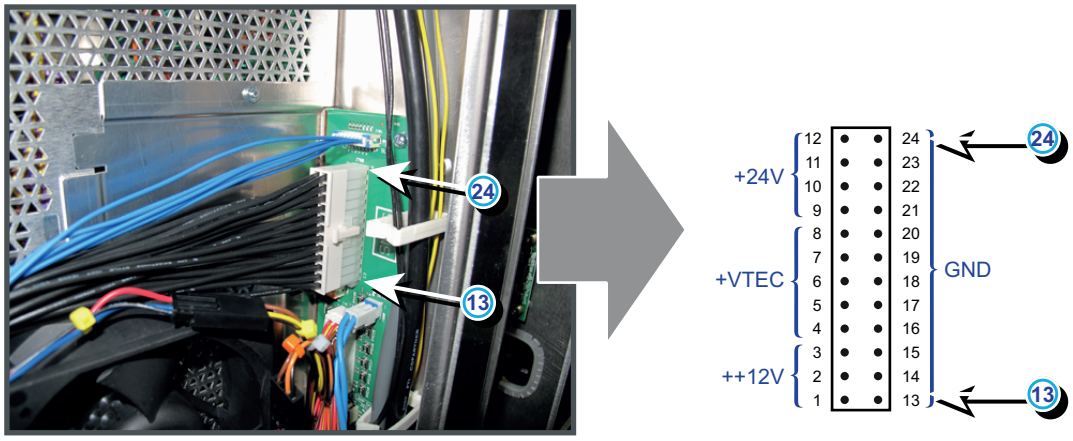


Image 18–72

## Code 5621: “electronics fan 1 (top side) - voltage high” (Warning)

| Situation | Solution |
|---|---|
| Malfunction Fan Control board or SMPS board. | Measure on the Signal Backplane the +24V voltage on pin 9, 10, 11 or 12 of the connector of the black wire unit which comes from the SMPS board. See Image 18–73.<br>If the measured voltage is about 24V then replace the Fan Control board. See “Replacement of a Card Cage board”, page 360. Otherwise replace the SMPS board. See “Replacement of the SMPS board”, page 368. |

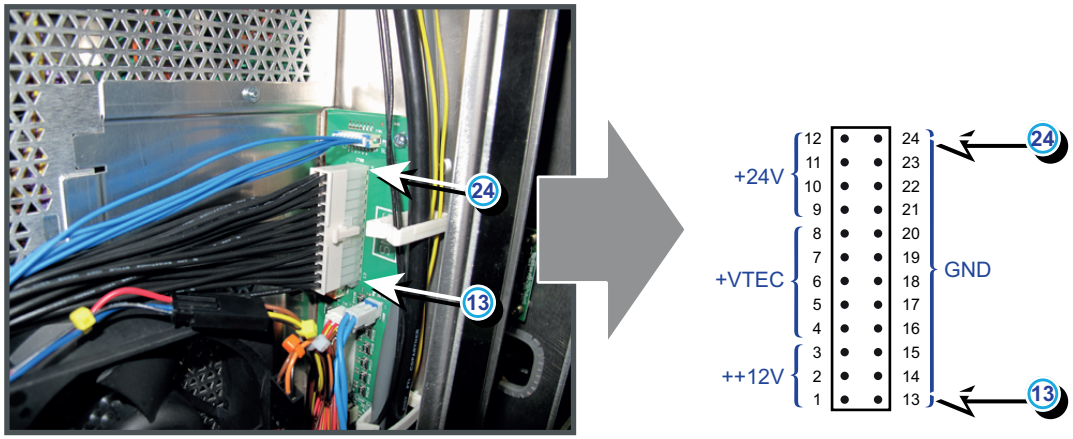


Image 18–73

## Code 5622: “electronics fan 1 (top side) - voltage too low” (Error)

This error code is probably preceded by the warning code 5623: “electronics fan 1 (top side) - voltage low”. The same troubleshooting table can be applied to.

## Code 5623: “electronics fan 1 (top side) - voltage low” (Error)

| Situation | Solution |
|---|---|
| Malfunction Fan Control board or SMPS board. | Measure on the Signal Backplane the +24V voltage on pin 9, 10, 11 or 12 of the connector of the black wire unit which comes from the SMPS board. See Image 18–74.<br>If the measured voltage is about 24V then replace the Fan Control board. See “Replacement of a Card Cage board”, page 360. Otherwise replace the SMPS board. See “Replacement of the SMPS board”, page 368. |
| Short circuit or bad connection. | 1. Check the Signal Backplane for bad connections. Ensure that all wire units are well connected.<br>(Note that the +24V supply is generated on the SMPS board and enters the Fan Control board and Cinema Control board via the Signal Backplane)<br>2. Check the wiring (reference 1 Image 18–119) of the Anode fan (reference 2 Image 18–119) for short circuits.<br>3. Check the wiring (reference 3 Image 18–119) of the Cathode fan (reference 4 Image 18–119) for short circuits. |

| Situation | Solution |
|---|---|
| Damaged insulation of the wire unit (reference 1 Image 18–75) of the upper fan (reference 2 Image 18–75) for the Card Cage electronics. The fan is the upper fan located behind the dust filter at the front of the projector. | Remove the dust filter at the front side of the projector and check the insulation of the wire unit of the fan.<br>1. Repair the insulation of the wire unit using shrink sleeve.<br>2. If not repairable, replace the whole wire unit and/or fan. See “Replacement of the Card Cage fans”, page 422. |
| Malfunction Power Backplane (bad connection) | Replace the Power Backplane. |

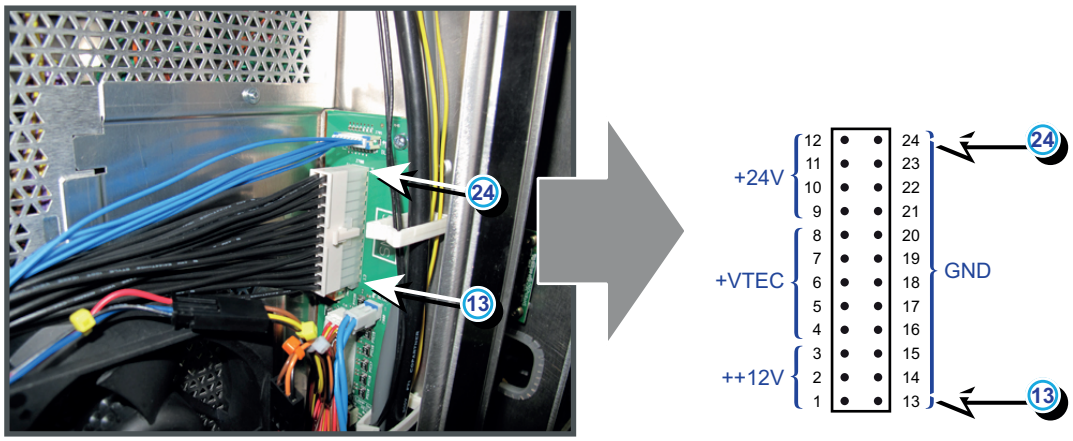


Image 18–74

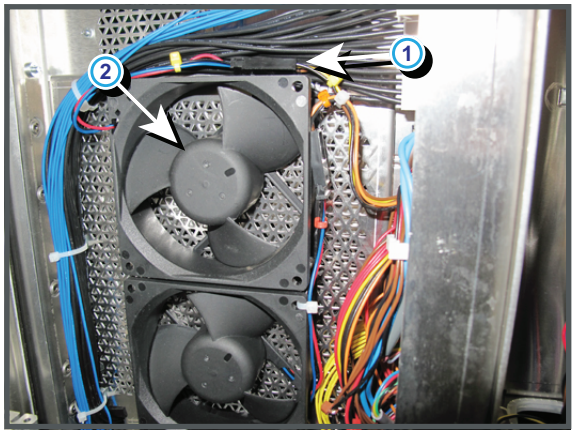


Image 18–75

## Code 5631: “electronics fan 2 (bottom side) - voltage high” (Warning)

| Situation | Solution |
|---|---|
| Malfunction Fan Control board or SMPS board. | Measure on the Signal Backplane the +24V voltage on pin 9, 10, 11 or 12 of the connector of the black wire unit which comes from the SMPS board. See Image 18–76.<br>If the measured voltage is about 24V then replace the Fan Control board. See “Replacement of a Card Cage board”, page 360. Otherwise replace the SMPS board. See “Replacement of the SMPS board”, page 368. |

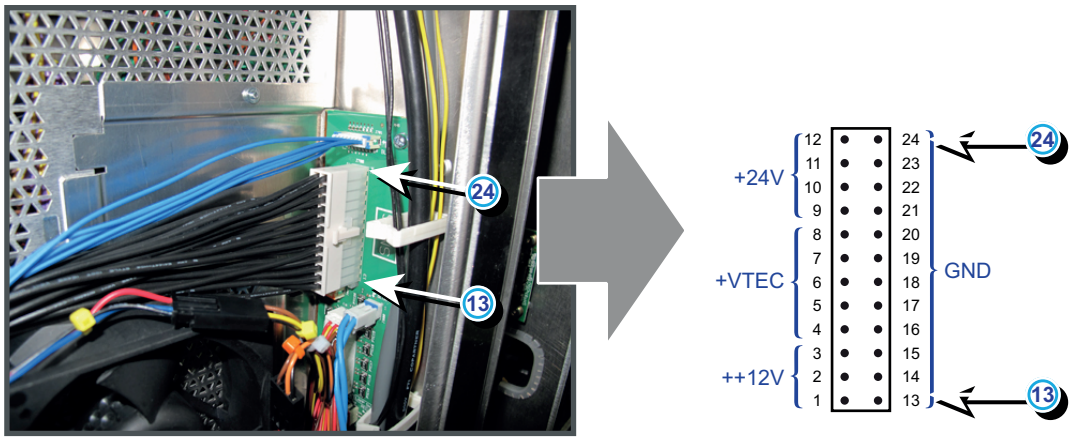


Image 18–76

## Code 5632: “electronics fan 2 (bottom side) - voltage too low” (Error)

This error code is probably preceded by the warning code 5633: “electronics fan 2 (bottom side) - voltage low”. The same troubleshooting table can be applied to.

## Code 5633: “electronics fan 2 (bottom side) - voltage low” (Error)

| Situation | Solution |
|---|---|
| Malfunction Fan Control board or SMPS board. | Measure on the Signal Backplane the +24V voltage on pin 9, 10, 11 or 12 of the connector of the black wire unit which comes from the SMPS board. See Image 18–77.<br>If the measured voltage is about 24V then replace the Fan Control board. See “Replacement of a Card Cage board”, page 360. Otherwise replace the SMPS board. See “Replacement of the SMPS board”, page 368. |
| Short circuit or bad connection. | 1. Check the Signal Backplane for bad connections. Ensure that all wire units are well connected.<br>(Note that the +24V supply is generated on the SMPS board and enters the Fan Control board and Cinema Control board via the Signal Backplane)<br>2. Check the wiring (reference 1 Image 18–119) of the Anode fan (reference 2 Image 18–119) for short circuits.<br>3. Check the wiring (reference 3 Image 18–119) of the Cathode fan (reference 4 Image 18–119) for short circuits. |
| Damaged insulation of the wire unit (reference 3 Image 18–78) of the lower fan (reference 4 Image 18–78) for the Card Cage electronics. The fan is the lower fan located behind the dust filter at the front of the projector. | Remove the dust filter at the front side of the projector and check the insulation of the wire unit of the fan.<br>1. Repair the insulation of the wire unit using shrink sleeve.<br>2. If not repairable, replace the whole wire unit and/or fan. See “Replacement of the Card Cage fans”, page 422. |
| Malfunction Power Backplane (bad connection) | Replace the Power Backplane. |

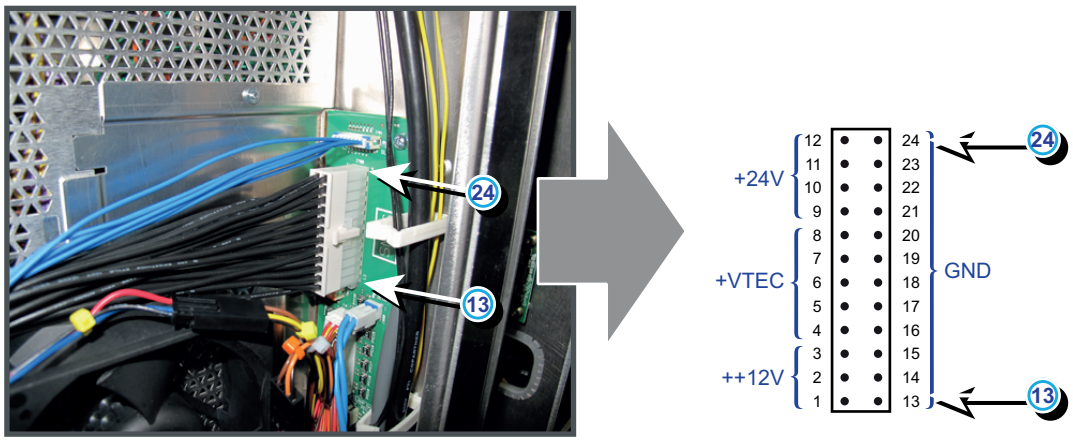


Image 18–77

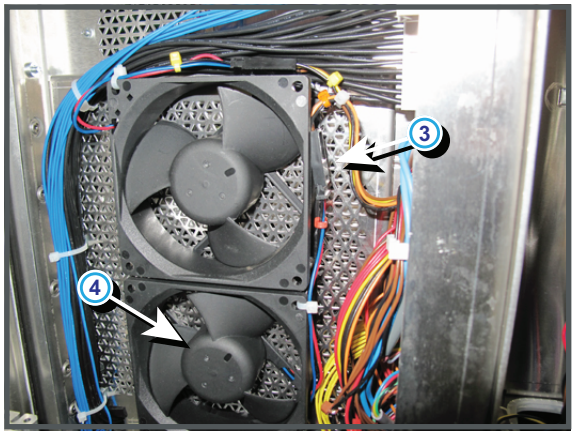


Image 18–78

## Code 5640: “lamp power supplies - zero lamp power supplies detected” (Error)

| Situation | Solution |
|---|---|
| Disconnected wire unit between the Signal Backplane and the LPS module. | Reconnect the wire unit between the Signal Backplane and the LPS module. |
| Disconnected wire unit between the “CTRL IN” and “CTRL OUT” sockets of the LPS units. | Reconnect the wire unit between the “CTRL IN” and “CTRL OUT” sockets of the LPS units. |
| Malfunction of one of the LPS units. The orange LED (Heartbeat) of the malfunction LPS is not blinking. | Replace the whole LPS module. See “Removal of an LPS module”, page 56. |
| Defect Signal Backplane. | Replace the Signal Backplane. |

## Code 5641: “lamp power supplies - lamp is on, but smps is off” (Error)

| Situation | Solution |
|---|---|
| Malfunction SMPS module. | Replace the SMPS module. See “Replacement of the SMPS board”, page 368. |
| Malfunction LPS module. | Replace the LPS module. See “Removal of an LPS module”, page 56. |
| Defect Signal Backplane. | Replace the Signal Backplane. |

### Code 5642: “lamp power supplies - at least one lamp power supply could not be detected” (Error)

| Situation | Solution |
|---|---|
| Disconnected wire unit between the “CTRL IN” and “CTRL OUT” sockets of the LPS units. | Reconnect the wire unit between the “CTRL IN” and “CTRL OUT” sockets of the LPS units. |
| Malfunction of one of the LPS units. The orange LED (Heartbeat) of the malfunction LPS is not blinking. | Replace the whole LPS module. See “Removal of an LPS module”, page 56. |

### Code 5643: “lamp power supplies - communication failed with at least one lamp power supply” (Error)

| Situation | Solution |
|---|---|
| Disconnected wire unit between the “CTRL IN” and “CTRL OUT” sockets of the LPS units. | Reconnect the wire unit between the “CTRL IN” and “CTRL OUT” sockets of the LPS units. |
| Malfunction of one of the LPS units. The orange LED (Heartbeat) of the malfunction LPS is not blinking. | Replace the whole LPS module. See “Removal of an LPS module”, page 56. |

### Code 5644: “lamp power supplies - lamp is on, but at least one lamp power supply is off” (Error)

| Situation | Solution |
|---|---|
| Main power cable disconnected from one of the LPS units. | Check if the main power cable is connected with the “MAINS INPUT” socket of the LPS unit. |
| Disconnected wire unit between the “CTRL IN” and “CTRL OUT” sockets of the LPS units. | Reconnect the wire unit between the “CTRL IN” and “CTRL OUT” sockets of the LPS units. |
| Malfunction of one of the LPS units. The red LED “ERR” of the malfunction LPS unit flashes fast. | Replace the whole LPS module. See “Removal of an LPS module”, page 56. |

## Code 5646: “light source - Switching on the light source failed” (Error)

| Situation | Solution |
|---|---|
| Tight source goes out immediately after the ignition or does not go on at all. SMPS and LPS seems to work normally. This situation can be the result of a bad lamp or SPG module. | • Install another xenon lamp in case the voltage on the “LAMP OUT” pins is 110 volt and you hear the SPG module three times clicking to ignite the lamp. See “Lamps and Lamp House (manual and motorized track1)”, page 69<br>• Replace the SPG module in case the voltage value on the “LAMP OUT” pins is 110 volt and you do NOT hear the SPG module clicking to ignite the lamp. See “Removal of the Start Pulse Generator”, page 64.<br>• Replace the LPS modules in case the voltage value on the “LAMP OUT” pins is below 110 volt and the lamp is not ignited.<br>Note: The ambient noise must be low to hear the SPG clicking in an attempt to ignite the lamp. |

## Code 5647: “light source - The light source was switched off due to an error” (Error)

| Situation | Solution |
|---|---|
| The Lamp Power Supply was triggered to switch off the lamp due to an error. | Check the projector log files for other listed errors and solve these errors first. See “Log files”, page 549. |
| Malfunction Lamp Power Supply (LPS). | Replace the Lamp Power Supply unit. See “Removal of an LPS module”, page 56 |
| Defect Lamp installed. | Replace the Lamp. See “Lamps and Lamp House (manual and motorized track1)”, page 69 |

## Code 5654: “lamp run time - read failed” (Error)

| Situation | Solution |
|---|---|
| Lamp House is not correctly installed. | Check if the Lamp House is properly installed. Make sure that both fixation screws (reference 1 Image 18–79) at the base of the Lamp House are fastened. See service manual chapter “Installation of the Lamp House”, page 119 |
| Lamp Info Module with old firmware. | Check lamp info module firmware version in the "version info" area of the communicator. If mismatch is detected then run update. See “Software update via Communicator (DC update companion)”, page 399. |
| Malfunction Lamp Info Module. | Replace the Lamp Info Module. See “Replacement of the Lamp Info module”, page 127. |

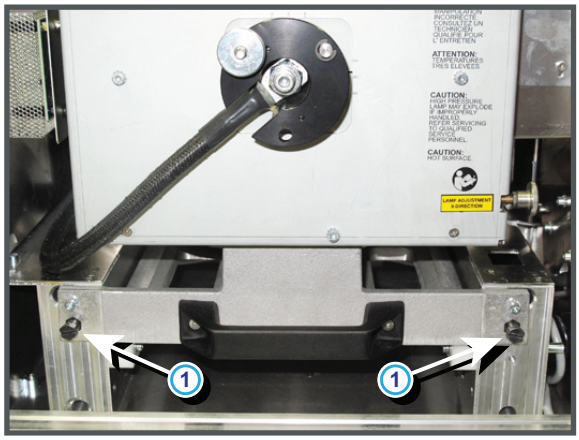

Image 18–79

## Code 5657: “lamp run time - exceeds maximum” (Error)

| Situation | Solution |
|---|---|
| The lamp inside the lamp house has exceeded its maximum run time. | Replace the lamp and reset hours and bulb type. “Lamps and Lamp House (manual and motorized track1)”, page 69. |

## Code 5658: “lamp run time - read limits failed” (Error)

| Situation | Solution |
|---|---|
| Lamp House is not correctly installed. | Check if the Lamp House is properly installed. Make sure that both fixation screws (reference 1 Image 18–80) at the base of the Lamp House are fastened. See service manual chapter “Installation of the Lamp House”, page 119. |
| Lamp Info Module with old firmware. | Check lamp info module firmware version in the "version info" area of the communicator. If mismatch is detected then run update. See “Software update via Communicator (DC update companion)”, page 399. |
| Malfunction Lamp Info Module. | Replace the Lamp Info Module. See “Replacement of the Lamp Info module”, page 127 |

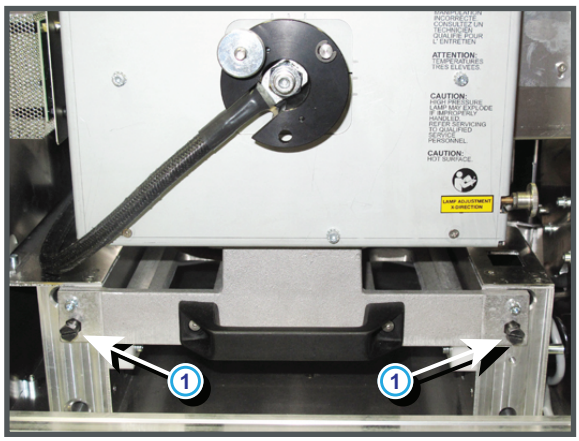


Image 18–80

## Code 5659: “lamp run time - warning” (Warning)

| Situation | Solution |
|---|---|
| The lamp inside the lamp house is about to exceed its maximum run time. | Replace the lamp as soon as possible. See “Lamps and Lamp House (manual and motorized track1)”, page 69. |

## Code 5670: “dowser - set dowser open failed” (Error)

| Situation | Solution |
|---|---|
| Wire unit Dowser disconnected from the Signal Backplane. | Reconnect the blue wire unit of the Dowser with the Signal Backplane. |
| Blocked blade of the Dowser | Check if noting is blocking the blade of the Dowser. Do NOT force the blade from the open position to the closed position or vice versa. |
| Damaged wire unit of the Dowser | Try to repair the damaged wire unit. If not possible replace the Dowser unit. See “Replacement of the Dowser (Shutter)”, page 272. |

| Situation | Solution |
|---|---|
| Malfunction motor of the Dowser unit | Replace the Dowser unit. See “Replacement of the Dowser (Shutter)”, page 272. |
| Malfunction Fan Control board | Replace the Fan Control board. See “Replacement of a Card Cage board”, page 360. |

### Code 5800: “ti-boards - system status = fail” (Error)

This is a generic TI error. Use the Communicator to make a detailed analysis. Go to Diagnostics > Actual > Cinema Front End Status > Detailed status > Error Messages. Possible error messages are:

| Situation | Solution |
|---|---|
| ICP self test - ICP frame memory test failed | Replace the ICP board. See “Replacement of a Card Cage board”, page 360. |
| ICP self test - ICP data path signature test failed | Check the connections to the Formatter boards on the Light Processor.<br>Replace the ICP board. See “Replacement of a Card Cage board”, page 360. |
| ICP Normal Configuration Error | Replace the ICP board. See “Replacement of a Card Cage board”, page 360. |
| ICP Boot Configuration Error | Replace the ICP board. See “Replacement of a Card Cage board”, page 360. |
| FMT Normal Configuration Error | Replace the ICP board. See “Replacement of a Card Cage board”, page 360. |
| FMT Boot Configuration Error | Replace the ICP board. See “Replacement of a Card Cage board”, page 360. |
| FMT Satellite Configuration Error | Replace the ICP board. See “Replacement of a Card Cage board”, page 360. |
| 1.20V Supply out of range | Replace the ICP board. See “Replacement of a Card Cage board”, page 360.. |
| 1.80V Supply out of range | Replace the ICP board. See “Replacement of a Card Cage board”, page 360. |
| 2.50V Supply out of range | Replace the ICP board. See “Replacement of a Card Cage board”, page 360. |
| 3.30V Supply out of range | Replace the ICP board. See “Replacement of a Card Cage board”, page 360. |
| ICP FPGA Temperature out of range | Temperature on ICP is too high. Current active fans have errors. Solve the fan problem first.<br>For a correct airflow, check if all covers are closed.<br>Ambient temperature is too high. Reduce the ambient temperature. |
| ICP FMT FPGA Temperature out of range | Temperature on ICP is too high. Current active fans have errors. Solve the fan problem first.<br>For a correct airflow, check if all covers are closed.<br>Ambient temperature is too high. Reduce the ambient temperature. |
| ICP Flash Update Error | Replace the ICP board. See “Replacement of a Card Cage board”, page 360. |

| Situation | Solution |
|---|---|
| ICP real time clock error | 1. Clear the error by configuring the RTC (Real Time Clock) of the ICP. See user manual Communicator chapter “Set up of the ICP clock”, choose the option UTC/GMT time calculated from current PC time current time.<br>2. If the error stays:<br>- replace the RTC (Real Time Clock) battery of the ICP board. See “Replacement of the RTC battery of the ICP board”, page 362.<br>- Clear the projector error 5800 “ti-icp - system status = fail” with error message “ICP real time clock error” by configuring the RTC (Real Time Clock) of the ICP. See user manual Communicator chapter “Set up of the ICP clock”, choose the option UTC/GMT time calculated from current PC time current time.<br>- Clear the projector error 5834 “physical marriage tamper event” by remarrying the projector. See service manual chapter "Authorization to clear security warning on the projector".<br>3. If problem remains, replace the ICP board. See “Replacement of a Card Cage board”, page 360 |
| Satellite Hardware Mismatch | Replace the Light Processor assembly. See “Sealed Light Processor assembly”, page 225. |

Other possible causes of this error code:

| Situation | Solution |
|---|---|
| The TI system status failure is caused by the projector which is too cold. The DMD's should not be operated at a temperature lower then 10°C (50°F). The projector has some protections for that. Below that temperature, the engine is switched of, and the result is a TI system status failure.<br>This situation can occur when the projector is recently installed and did not had the time to acclimate to the normal room temperature. There is also a message that the temperatures are too low. See log files. | Make sure that the ambient temperature is within specs. Let the projector acclimate to the normal room temperature which should be higher then 10° C (50°F) and lower then 35°C (95°F). Do not ignite the lamp, otherwise there is a risk for condensation. |

## Code 5801: “ti-link-decryptor - service door tamper event ” (Error)

| Situation | Solution |
|---|---|
| The Card Cage cover has been removed. | Clear the security warning. See service manual chapter “Authorization to clear security warning on the projector”, page 398.<br>Brief procedure to clear the security warning:<br>1. Ensure the cover plate of the Light Processor compartment is properly installed.<br>2. Ensure the cover plate of the Card Cage compartment is properly installed.<br>3. Start up the projector.<br>4. Initiate authorization by holding the security key in the security socket.<br>5. Enter the pin code within 5 seconds. |
| The cover plate of the Light Processor compartment has been removed. | Clear the security warning. See service manual chapter “Authorization to clear security warning on the projector”, page 398.<br>Brief procedure to clear the security warning:<br>1. Ensure the cover plate of the Light Processor compartment is properly installed.<br>2. Ensure the cover plate of the Card Cage compartment is properly installed.<br>3. Start up the projector.<br>4. Initiate authorization by holding the security key in the security socket.<br>5. Enter the pin code within 5 seconds. |
| Defect security switches Card Cage cover (reference 1 & 2 Image 18–82) | Replace DCI security switches of the Card Cage. |
| Defect security switches cover plate Light Processor compartment (reference 3 & 4Image 18–82) | Replace DCI security switches of the Light Processor compartment. |
| Malfunction Signal Backplane | If switch replacement cures nothing then replace Signal Backplane. |




Image 18–81

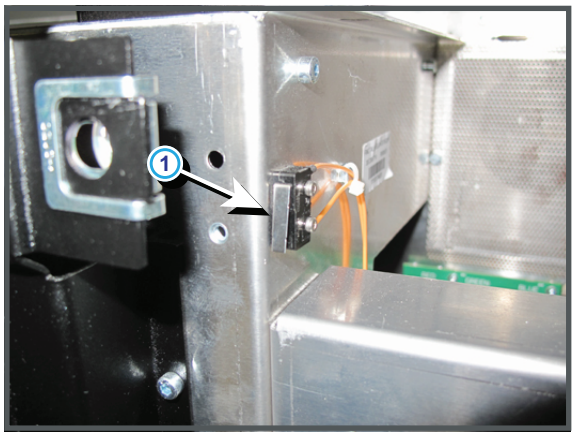


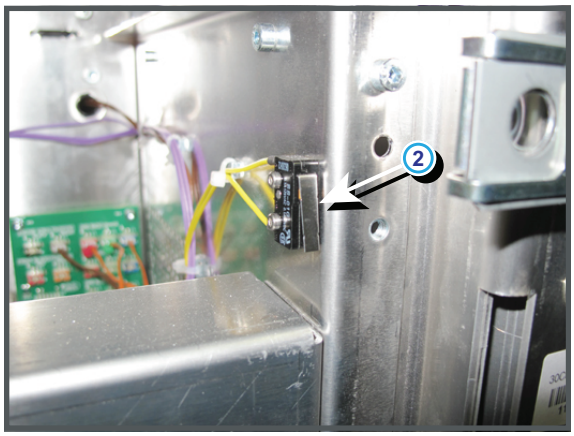


Image 18–82

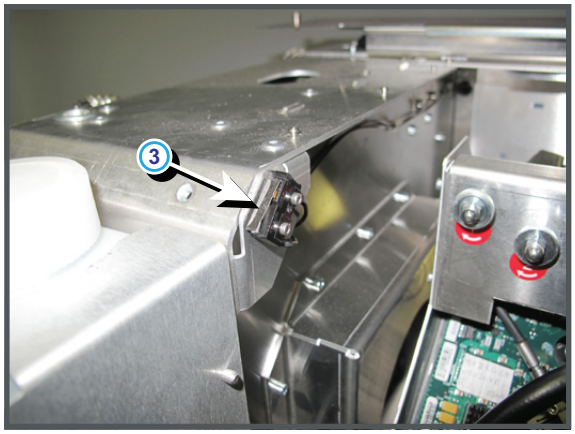


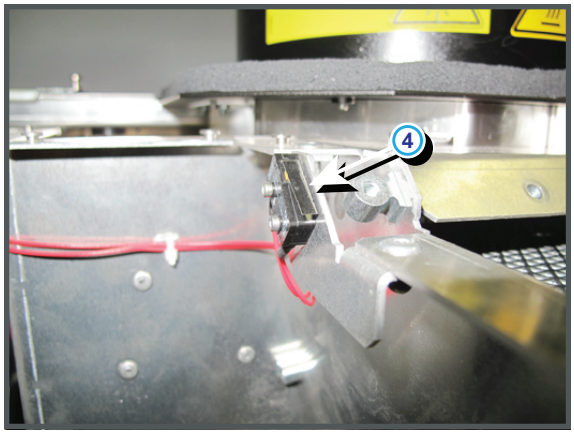


Image 18–83

## Code 5807: “ti-icp - read system status failed” (Error)

The Barco controller can not read the status of the ICP.

| Situation | Solution |
|---|---|
| ICP board is not correctly inserted | Insert the ICP board properly. |
| ICP crash. The most left LED is not blinking | Restart the projector. |
| ICP is being upgrading | Wait until projector reset after the upgrade. |

## Code 5812: “ti-icp - read satellite info failed” (Error)

| Situation | Solution |
|---|---|
| One of the wire units of the Formatter boards on the Light Processor is not correctly connected with the Signal Backplane (reference 1, 2 & 3 Image 18–84). | Check the connections between the Formatter boards of the Light Processor and the Signal backplane on the Signal backplane side. |
| A wire unit on one of the Formatter boards of the Light Processor is not correctly connected (reference 11, 12, 13 Image 18–84 and Image 18–85) | Check the connections between the Formatter boards of the Light Processor and the Signal backplane on the Light Processor side. See Image 18–84 reference 11 for the RED Formatter board, Image 18–85 reference 12 for the GREEN Formatter board and reference 13 for the BLUE Formatter board. Note: To access the three wires on the BLUE Formatter board the Light Processor has to be removed from the projector. |

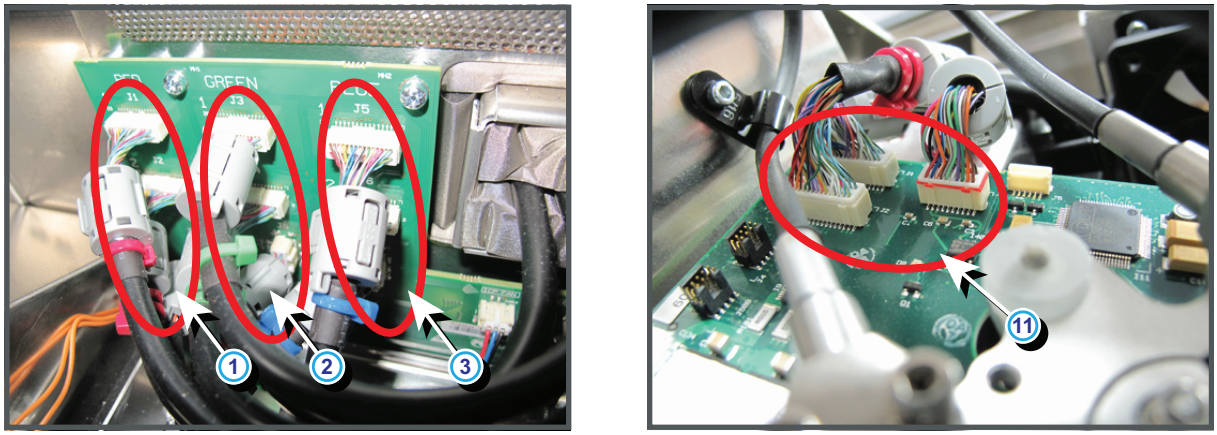


Image 18–84

1 Connections on the Signal Backplane for the Red Formatter board.
2 Connections on the Signal Backplane for the Green Formatter board.
3 Connections on the Signal Backplane for the Blue Formatter board.
11 Connections on the Red Formatter board.

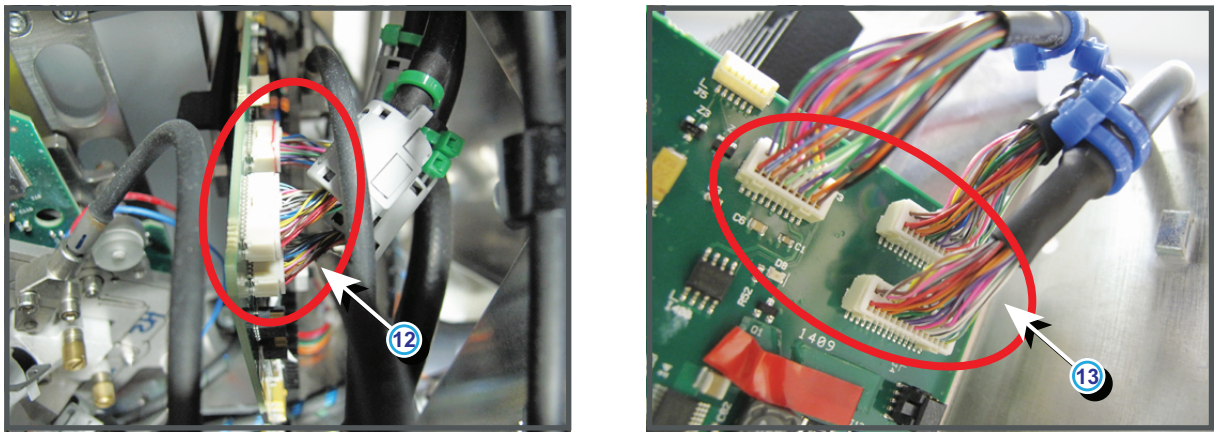


Image 18–85

12 Connections on the Green Formatter board.
13 Connections on the Blue Formatter board.

## Code 5813: “ti-icp - satellite firmware mismatch” (Error)

This error can occur when you move ICP boards between projectors which have a different DMD configuration. (E.g. switching an ICP between a 1.2 and 0.98 inch system)

| Situation | Solution |
|---|---|
| ICP software corrupt | Reinstall the ICP software.<br>Use the “DC update companion” to update the software. These software is part of the Communicator software.<br>• Start your communicator, make a connection and login as service technician.<br>• Browse to Maintenance - Software upgade and click on Launch DC Update companion. Follow the instruction on the screen.<br>For more information on “launching DC update companion”, see Communicator's User Guide. Continue then with “ICP software upgrade” as described in the same user guide. |

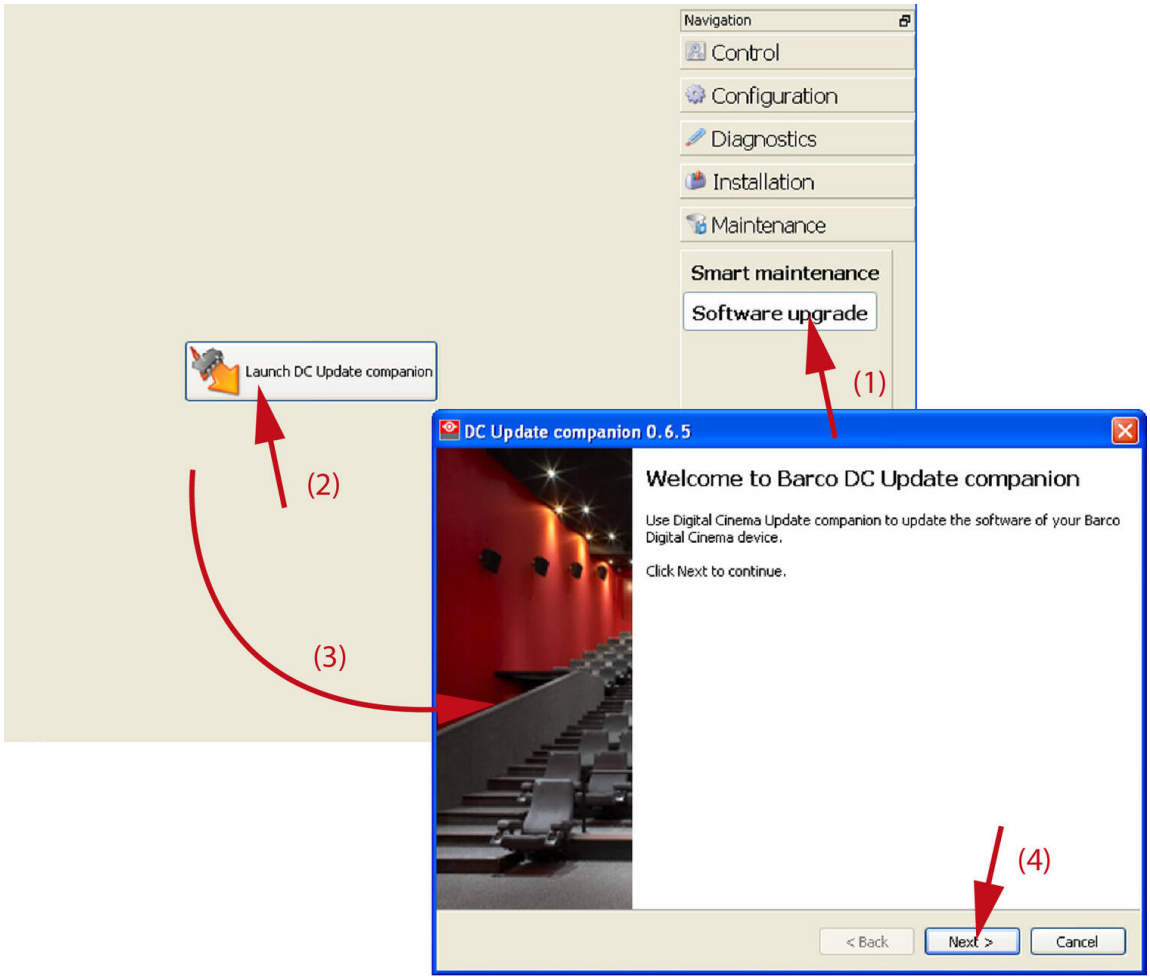


Image 18–86 Launch DC update companion

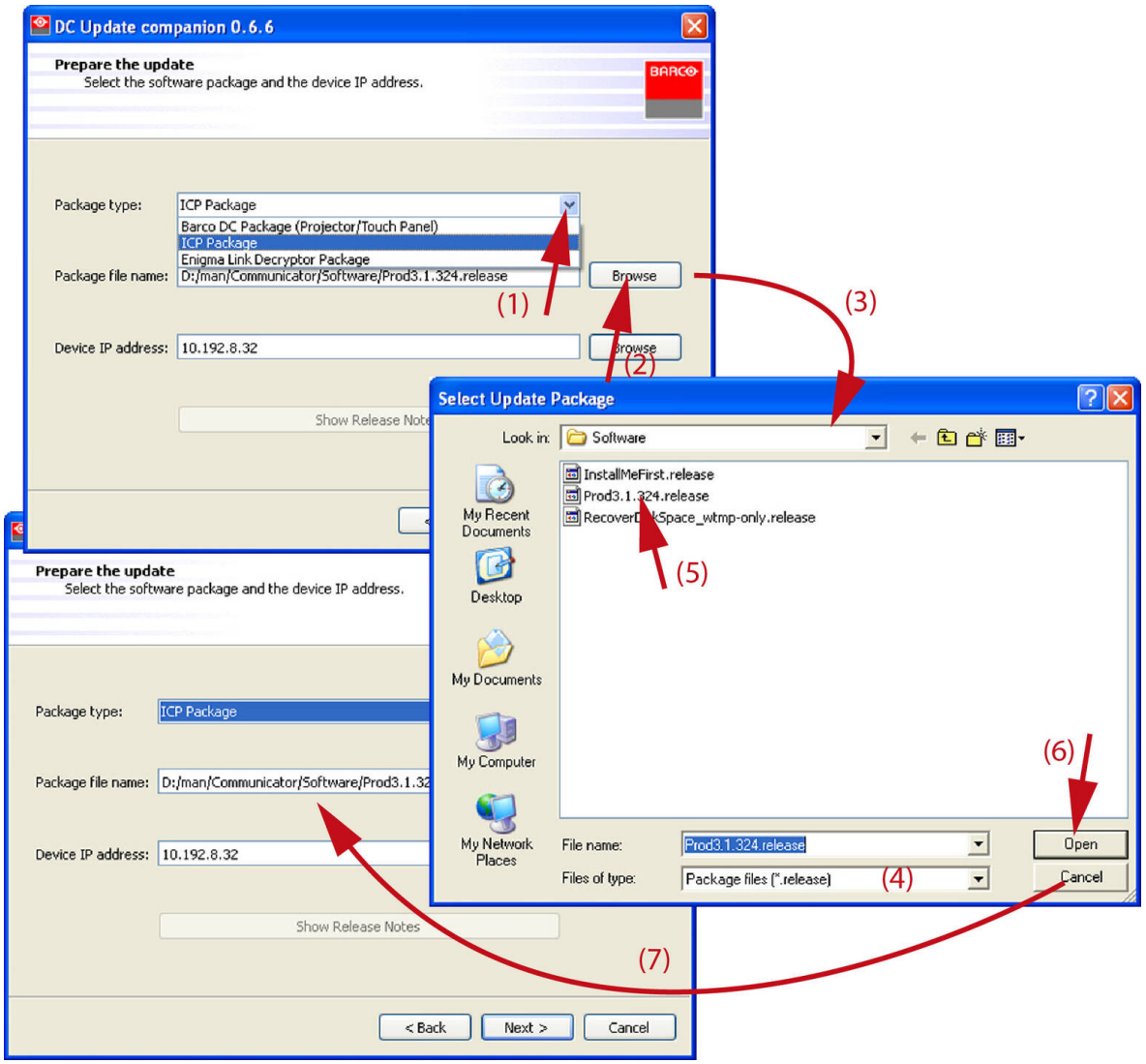


Image 18–87

## Code 5814: “ti-icp - self test = fail” (Error)

| Situation | Solution |
|---|---|
| One of the wire units of the Formatter boards on the Light Processor is not correctly connected with the Signal Backplane (reference 1, 2 & 3 Image 18–88). | Check the connections between the Formatter boards of the Light Processor and the Signal backplane on the Signal backplane side. |
| A wire unit on one of the Formatter boards of the Light Processor is not correctly connected (reference 11, 12, 13Image 18–88 and Image 18–89) | Check the connections between the Formatter boards of the Light Processor and the Signal backplane on the Light Processor side. See Image 18–88reference 11 for the RED Formatter board, Image 18–89 reference 12 for the GREEN Formatter board and reference 13 for the BLUE Formatter board. Note: To access the three wires on the BLUE Formatter board the Light Processor has to be removed from the projector. |

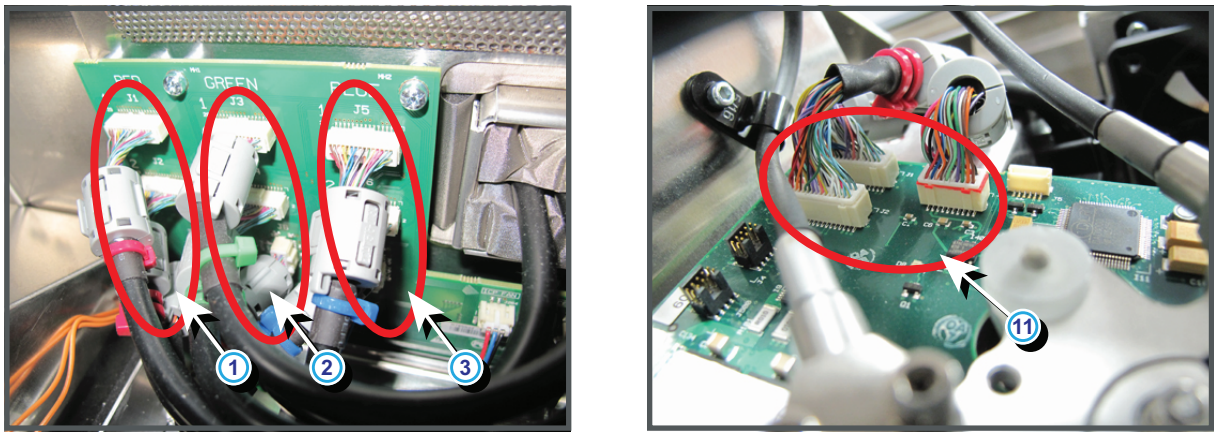


Image 18–88

1 Connections on the Signal Backplane for the Red Formatter board.
2 Connections on the Signal Backplane for the Green Formatter board.
3 Connections on the Signal Backplane for the Blue Formatter board.
11 Connections on the Red Formatter board.

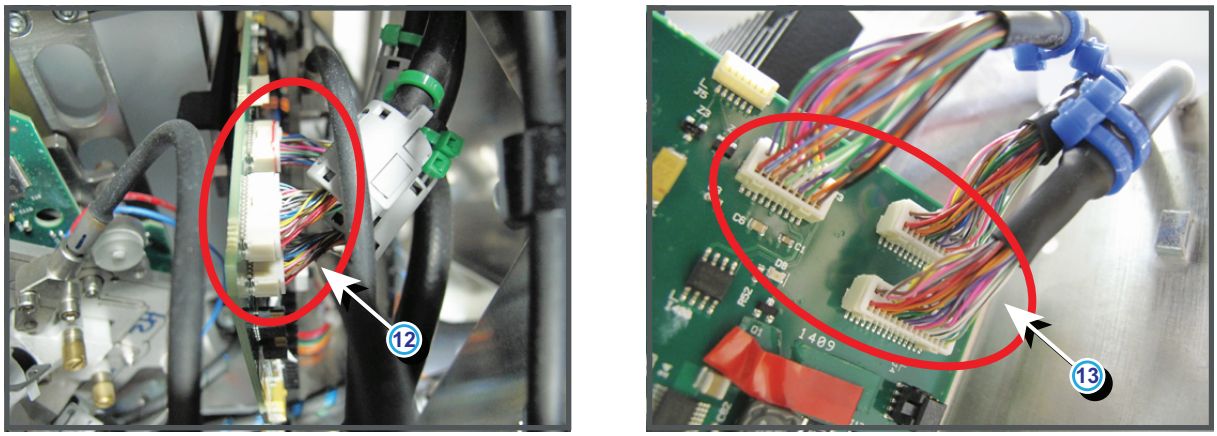


Image 18–89

12 Connections on the Green Formatter board.
13 Connections on the Blue Formatter board.

## Code 5815: “ti-icp - certificate error” (Error)

| Situation | Solution |
|---|---|
| New ICP software version installed but no reboot of projector has happen. | Reboot projector |
| Error remains occurring after different boot cycles. | Replace ICP board. See “Replacement of a Card Cage board”, page 360. |

## Code 5816: “ti-icp - key error” (Error)

| Situation | Solution |
|---|---|
| New ICP software version installed but no reboot of projector has happen. | Reboot projector |
| Error remains occurring after different boot cycles. | Replace ICP board. See “Replacement of a Card Cage board”, page 360. |

### Code 5817: “ti-icp - icp board not detected” (Error)

| Situation | Solution |
|---|---|
| There is no ICP board installed. | Install an ICP board. |
| ICP board not correctly inserted. | Re-install the ICP board. |

### Code 5830: “ti-link-decryptor - no communication” (Error)

| Situation | Solution |
|---|---|
| Link decryptor is not correctly seated. | Reseat the link decryptor.<br>If problem remains, replace the link decryptor. |

### Code 5831: “ti-link-decryptor - system error” (Error)

With the Communicator, go to *Diagnostics → Actual → Link Decryptor status → Error messages*

The following errors can occur:

| Error | Solution |
|---|---|
| Link decryptor - User loader integrity error | Replace link decryptor. See “Replacement of the Link Decryptor”, page 366. |
| Link decryptor - Main application integrity error | Replace link decryptor. See “Replacement of the Link Decryptor”, page 366. |
| Link decryptor - RNG hardware integrity error | Replace link decryptor. See “Replacement of the Link Decryptor”, page 366. |
| Link decryptor - DRNG hardware integrity error | Replace link decryptor. See “Replacement of the Link Decryptor”, page 366. |
| Link decryptor - RSA algorithm integrity error | Replace link decryptor. See “Replacement of the Link Decryptor”, page 366. |
| Link decryptor - AES algorithm integrity error | Replace link decryptor. See “Replacement of the Link Decryptor”, page 366. |
| Link decryptor - HMAC algorithm integrity error | Replace link decryptor. See “Replacement of the Link Decryptor”, page 366. |
| Link decryptor - SHA algorithm integrity error | Replace link decryptor. See “Replacement of the Link Decryptor”, page 366. |
| Link decryptor - TLS integrity error | Replace link decryptor. See “Replacement of the Link Decryptor”, page 366. |
| Link decryptor - FPGA configuration integrity error | Replace link decryptor. See “Replacement of the Link Decryptor”, page 366. |
| Link decryptor - FPGA cinelink 2 decryption integrity error | Replace link decryptor. See “Replacement of the Link Decryptor”, page 366. |
| Link decryptor - Real time clock error | Replace link decryptor. See “Replacement of the Link Decryptor”, page 366. |
| Link decryptor - FPGA configuration error | Replace link decryptor. See “Replacement of the Link Decryptor”, page 366. |
| Link decryptor - FPGA temperature out of range | Temperature on the link decryptor is to high. Check for other fan or temperature error messages. Check if the front cover of the HDSDI module is closed. |

| Error | Solution |
|---|---|
| Link decryptor - RNG Hardware duplicate output error | Replace link decryptor. See “Replacement of the Link Decryptor”, page 366. |
| Link decryptor - DRNG Hardware duplicate output error | Replace link decryptor. See “Replacement of the Link Decryptor”, page 366. |
| Link decryptor - 1.20V supply out of range | Replace SMPS. See “Replacement of the SMPS board”, page 368.<br>Replace Signal backplane.<br>Replace link decryptor. See “Replacement of the Link Decryptor”, page 366. |
| Link decryptor - 1.80V supply out of range | Replace SMPS. See “Replacement of the SMPS board”, page 368.<br>Replace Signal backplane.<br>Replace link decryptor. See “Replacement of the Link Decryptor”, page 366. |
| Link decryptor - 2.50V supply out of range | Replace SMPS. See “Replacement of the SMPS board”, page 368.<br>Replace Signal backplane.<br>Replace link decryptor. See “Replacement of the Link Decryptor”, page 366. |
| Link decryptor - 3.30V regulator out of range | Replace SMPS. See “Replacement of the SMPS board”, page 368.<br>Replace Signal backplane.<br>Replace link decryptor. See “Replacement of the Link Decryptor”, page 366. |
| Link decryptor - Security tamper | The link decryptor has been tampered. Replace link decryptor. See “Replacement of the Link Decryptor”, page 366. |
| Link decryptor - Top side security enclosure open | The top side enclosure has been tampered. Replace link decryptor. See “Replacement of the Link Decryptor”, page 366. |
| Link decryptor - Bottom side security enclosure open | The bottom side enclosure has been tampered. Replace link decryptor. See “Replacement of the Link Decryptor”, page 366. |
| Link decryptor - Software command Zeroization | Replace link decryptor. See “Replacement of the Link Decryptor”, page 366. |
| Link decryptor - Physical marriage tamper | The ICP and/or link decryptor have been removed and inserted again. You need to remarry both. Start the clear security warning procedure. See “Authorization to clear security warning on the projector”, page 398. |
| Link decryptor - Logical marriage tamper | The ICP and link decryptor are not a couple. This means one of both has been replaced. You need to marry both. Start the clear security warning procedure. See “Authorization to clear security warning on the projector”, page 398. |
| Link decryptor - Service door tamper | The Card Cage cover has been removed. Clear the security warning. See “Authorization to clear security warning on the projector”, page 398.<br>The cover plate of the Light Processor compartment has been removed. Clear the security warning. See “Authorization to clear security warning on the projector”, page 398.<br>Defect security switches. If all compartments and devices are installed and security error will not authorize, replace DCI security switches.<br>Malfunction Signal Backplane. If switch replacement is not the solution, then replace Signal Backplane. |
| Link decryptor - Service log error | The Security Log Error indicates that there is no more room to write log entries in the link decryptor log file. |

| Error | Solution |
|---|---|
| | When this error is active, the DCI compliant Server needs to extract the log data (via ASM/TLS session) from the link decryptor Security Log. Reads of the security log by any other entity/means will not impact this error. This error will remain active until the Server reads enough log entries to create room for 512 log entries. This can take some time. Playback will be prohibited (black image) as long as this error is active. |
| Link decryptor - Security battery low warning | The battery of the link-decryptor is low. Leave the projector on for some time to recharge the battery. |
| Link decryptor - Security log warning | The security log warning indicates that there are less than 512 log entry locations available in the link decryptor log before the log is full. The attached server needs to read the log which will clear the log of the projector.<br>When this warning is active, the DCI compliant server needs to extract the log data (via ASM/TLS session) from the link decryptor Security Log. This can take some time. Reads of the security log by any other entity/means will not impact this warning. |

### Code 5832: “ti-link-decryptor - security tamper event” (Error)

| Situation | Solution |
|---|---|
| The link decryptor has been tampered. | Replace link decryptor. See “Replacement of the Link Decryptor”, page 366. |

### Code 5833: “ti-link-decryptor - logical marriage tamper event” (Error)

| Situation | Solution |
|---|---|
| The ICP and link decryptor are not a couple. | This means one of both has been replaced. You need to marry both. Start the clear security warning procedure. See “Authorization to clear security warning on the projector”, page 398. Together with this error you will always have an error *“ti-link-decryptor physical marriage tamper event”*. Brief procedure to clear the security warning and marriage ICP and decryptor:<br>1. Ensure the cover plate of the Light Processor compartment is properly installed.<br>2. Ensure that all boards in the Card Cage are properly installed.<br>3. Start up the projector.<br>4. Initiate authorization by holding the security key in the security socket (reference 1 Image 18–90).<br>5. Enter the pin code within 5 seconds. |




Image 18–90

## Code 5834: “ti-link-decryptor - physical marriage tamper event” (Error)

| Situation | Solution |
|---|---|
| The ICP and/or link decryptor have been removed and inserted again. | You need to remarry both. Start the clear security warning procedure. See “Authorization to clear security warning on the projector”, page 398. Brief procedure to clear the security warning and marriage ICP and decryptor:<br>1. Ensure the cover plate of the Light Processor compartment is properly installed.<br>2. Ensure that all boards in the Card Cage are properly installed.<br>3. Start up the projector.<br>4. Initiate authorization by holding the security key in the security socket (reference 1 Image 18–91).<br>5. Enter the pin code within 5 seconds. |




Image 18–91

## Code 5835: “ti-link-decryptor - security log is almost full” (Error)

| Situation | Solution |
|---|---|
| The security log is almost full indicates that there are less than 512 log entry locations available in the link decryptor log before the log is full.<br>The attached server needs to read the log which will clear the log of the projector. | When this warning is active, the DCI compliant server needs to extract the log data (via ASM/TLS session) from the link decryptor Security Log. This can take some time. Reads of the security log by any other entity/means will not impact this warning. |

## Code 5836: “ti-link-decryptor - security log is full” (Error)

| Situation | Solution |
|---|---|
| The Security Log Error indicates that there is no more room to write log entries in the link decryptor log file. | When this error is active, the DCI compliant Server needs to extract the log data (via ASM/TLS session) from the link decryptor Security Log. Reads of the security log by any other entity/means will not impact this error. This error will remain active until the Server reads enough log entries to create room for 512 log entries. This can take some time. Playback will be prohibited (black image) as long as this error is active. |

### Code 5837: “ti-link-decryptor - read system status failed ” (Error)

| Situation | Solution |
|---|---|
| Link decryptor is not correctly seated. | Reseat the link decryptor.<br>If problem remains, replace link decryptor. See “Replacement of the Link Decryptor”, page 366. |

### Code 5850: “imb - no communication” (Error)

| Situation | Solution |
|---|---|
| No communication with media block | Check if the media block is well seated.<br>Replace the media block. |

### Code 5851: “imb - service door tamper event” (Error)

| Situation | Solution |
|---|---|
| A board in the Card Cage or the top cover of the Card Cage has been removed. Security switches (reference 1 & 2 Image 18–93) are activated. | Clear the security warning. See “Authorization to clear security warning on the projector”, page 398.<br>Brief procedure to clear the security warning:<br>1. Ensure the cover plate of the Light Processor compartment is properly installed.<br>2. Ensure that all boards in the Card Cage are properly installed.<br>3. Ensure that the top over of the Card Cage is properly installed.<br>4. Start up the projector.<br>5. Initiate authorization by holding the security key in the security socket (reference 1 Image 18–92).<br>6. Enter the pin code within 5 seconds. |
| The cover plate of the Light Processor compartment has been removed. Security switches (reference 3 & 4 Image 18–94) are activated. | Clear the security warning. See “Authorization to clear security warning on the projector”, page 398.<br>Brief procedure to clear the security warning:<br>1. Ensure the cover plate of the Light Processor compartment is properly installed.<br>2. Ensure that all boards in the Card Cage are properly installed.<br>3. Ensure that the top over of the Card Cage is properly installed.<br>4. Start up the projector.<br>5. Initiate authorization by holding the security key in the security socket (reference 1 Image 18–92).<br>6. Enter the pin code within 5 seconds. |
| Defect security switches (reference 1 & 2 Image 18–93 and reference 3 & 4 Image 18–94). | If all compartments and devices are installed and security error will not authorize, replace DCI security switches. |
| Malfunction Signal Backplane | If switch replacement is not the solution, then replace Signal Backplane. |

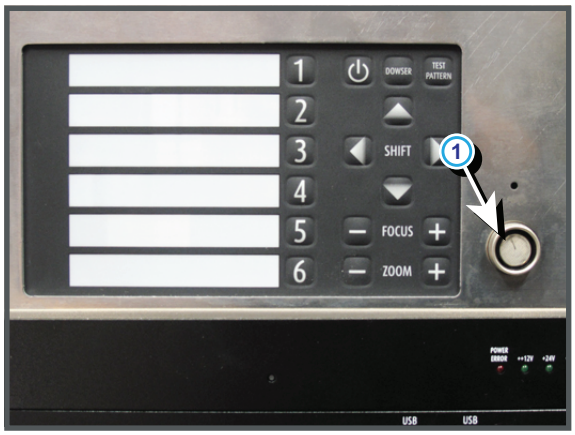


Image 18–92

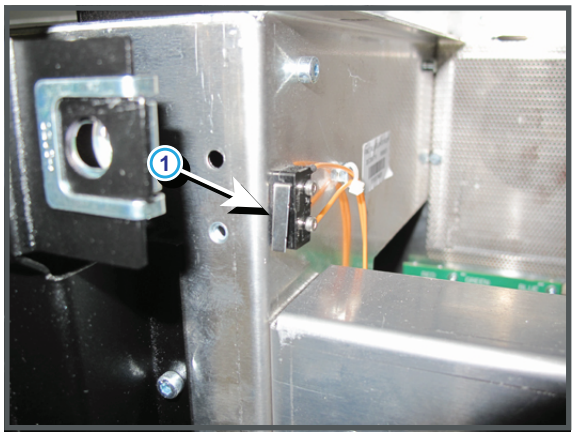


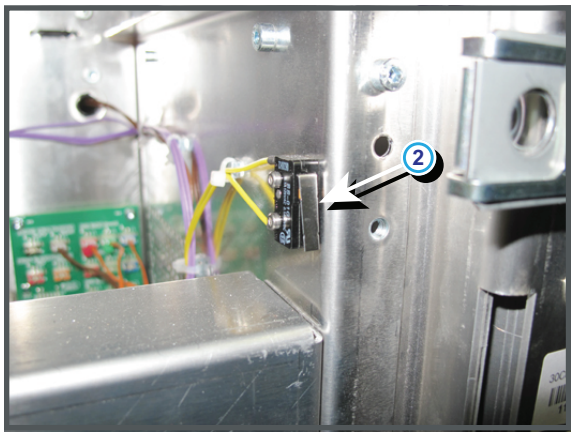


Image 18–93

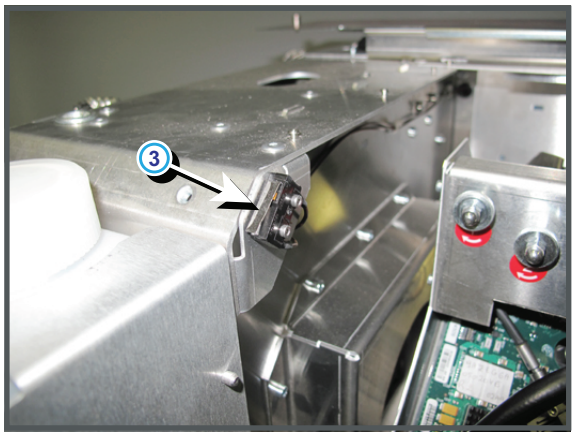


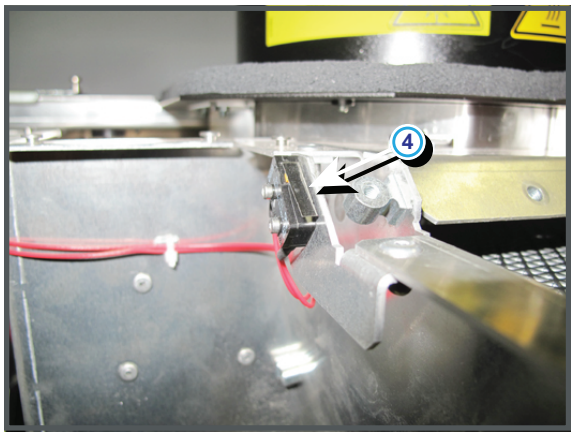


Image 18–94

## Code 5853: “imb - logical marriage tamper event” (Error)

| Situation | Solution |
|---|---|
| The ICP and Mediablock are not a couple. | This means one of both has been replaced. You need to marry both. Start the clear security warning procedure. See “Authorization to clear security warning on the projector”, page 398. Together with this error you will always have an error *“imb - physical marriage tamper event”*.<br>Brief procedure to clear the security warning:<br>1. Ensure the cover plate of the Light Processor compartment is properly installed.<br>2. Ensure that all boards in the Card Cage are properly installed.<br>3. Ensure that the top over of the Card Cage is properly installed.<br>4. Start up the projector.<br>5. Initiate authorization by holding the security key in the security socket (reference 1 Image 18–95).<br>6. Enter the pin code within 5 seconds. |

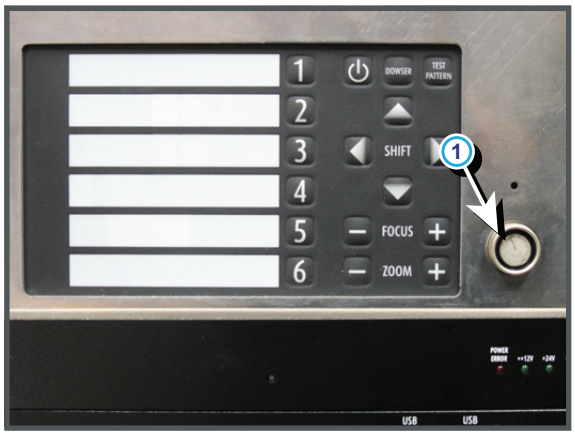


Image 18–95

## Code 5854: “imb - physical marriage tamper event” (Error)

| Situation | Solution |
|---|---|
| The ICP and/or IMediablock have been removed and inserted again. | You need to remarry both. Start the clear security warning procedure. See “Authorization to clear security warning on the projector”, page 398.<br>Brief procedure to clear the security warning:<br>1. Ensure the cover plate of the Light Processor compartment is properly installed.<br>2. Ensure that all boards in the Card Cage are properly installed.<br>3. Ensure that the top over of the Card Cage is properly installed.<br>4. Start up the projector.<br>5. Initiate authorization by holding the security key in the security socket (reference 1 Image 18–96).<br>6. Enter the pin code within 5 seconds. |

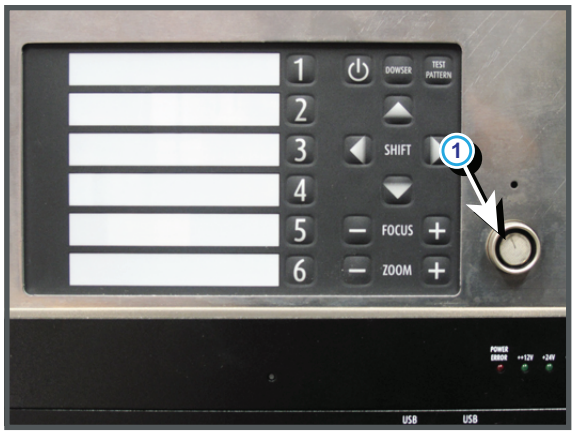


Image 18–96

## Code 5880: “dolby 3d key-server - read status failed” (Warning)

| Situation | Solution |
|---|---|
| Exceptional software failure. | Reboot the projector. |
| Corrupt Dolby 3D key server program. Unable to read the “Version Info” from the “Dolby 3D key server program” via the Communicator software. | Reinstall the “Dolby 3D key server program” on the projector. Use the Projector Toolset. |

## Code 5881: “dolby 3d key-server - status = locked” (Warning)

| Situation | Solution |
|---|---|
| The content server does not support Dolby 3D. | Check if the projector is connected with a Dolby 3D certified server. |
| Malfunction content server. | Check the Dolby certified content server.<br>As a temporally solution unlock the 3D key-server by pressing the button “Manual unlock” in the “3D integrated color wheel” menu of the Communicator software. Note that in this case the 3D key-server remains unlocked for 24 hours. |

## Code 5882: “3d module - read status failed” (Warning)

| Situation | Solution |
|---|---|
| Exceptional software failure. | Reboot the projector. |
| There is no Dolby 3D color wheel installed in the projector but the flag for Dolby 3D is set in the Communicator software. | Either install the Dolby 3D color wheel unit or disable the Dolby 3D option in the Communicator software. |
| The Dolby 3D color wheel unit is disconnected from the Formatting Interface Board. | Check the connection between the Dolby 3D color wheel unit and the Formatting Interface Board. |

| Situation | Solution |
|---|---|
| Malfunction electronic board of the Dolby 3D color wheel unit.<br>The color wheel can be rotated by hand (spinning motor OK) and be moved back and forward by hand (retraction mechanism OK). Note that to move the color wheel manually you have to remove the light processor unit from the projector. | Replace the electronic board of the Dolby 3D color wheel unit. |
| Malfunction of the Dolby 3D color wheel unit. | Replace the whole Dolby 3D color wheel unit. Send the malfunction unit back to Barco. |

## Code 5884: “3d module - change status failed due to dolby 3d key-server lock” (Error)

| Situation | Solution |
|---|---|
| Exceptional software failure. | Reboot the projector. |
| Corrupt Dolby 3D key server program. Unable to read the “Version Info” from the “Dolby 3D key server program” via the Communicator software. | Reinstall the “Dolby 3D key server program” on the projector. Use the Projector Toolset. |
| The content server does not support Dolby 3D. | Check if the projector is connected with a Dolby 3D certified server. |
| Malfunction content server. | Check the Dolby certified content server.<br>As a temporally solution unlock the 3D key-server by pressing the button “Manual unlock” in the “3D integrated color wheel” menu of the Communicator software. Note that in this case the 3D key-server remains unlocked for 24 hours. |

## Code 5885: “3d module - change status failed due to communication error” (Error)

| Situation | Solution |
|---|---|
| Exceptional software failure. | Reboot the projector. |
| There is no Dolby 3D color wheel installed in the projector but the flag for Dolby 3D is set in the Communicator software. | Either install the Dolby 3D color wheel unit or disable the Dolby 3D option in the Communicator software. |
| The Dolby 3D color wheel unit is disconnected from the Formatting Interface Board. | Check the connection between the Dolby 3D color wheel unit and the Formatting Interface Board. Replace wire unit if damaged. |

| Situation | Solution |
|---|---|
| Malfunction electronic board of the Dolby 3D color wheel unit.<br>The color wheel can be rotated by hand (spinning motor OK) and be moved back and forward by hand (retraction mechanism OK). Note that to move the color wheel manually you have to remove the light processor unit from the projector. | Replace the electronic board of the Dolby 3D color wheel unit. |
| Malfunction of the Dolby 3D color wheel unit. | Replace the whole Dolby 3D color wheel unit. Send the malfunction unit back to Barco. |

## Code 5890: “3d module - color wheel spin failed” (Error)

| Situation | Solution |
|---|---|
| Spinning motor disconnected. | Check the connection (reference D Image 18–97) of the spinning motor. Replace wire unit if damaged. |
| Feedback circuit of the spinning motor disconnected. | Check the connection (reference A Image 18–97) of the feedback circuit. Replace wire unit if damaged. |
| Blocked color wheel. | Check if the Dolby 3D color wheel can turn freely. No mechanics preventing wheel to turn. |
| Malfunction Dolby 3D color wheel board. | Replace the electronic board of the Dolby 3D color wheel unit. |
| Malfunction spinning motor. | Replace the whole Dolby 3D color wheel unit. Send the malfunction unit back to Barco. |

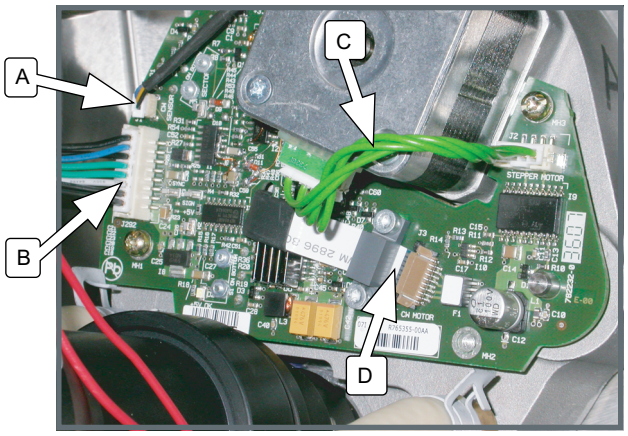


Image 18–97 Dolby 3D color wheel board connections.

**A** Spinning motor feedback circuit.
**B** Connection with Formatting Interface Board.
**C** Wire unit between retraction motor and electronic board.
**D** Wire unit between spinning motor and electronic board.

## Code 5891: “3d module - color wheel in failed” (Error)

| Situation | Solution |
|---|---|
| Exceptional software failure. | Reboot the projector. |
| Retraction motor disconnected. | Check if the wire unit (reference C Image 18–98) of the retraction motor is well inserted. Replace wire unit if damaged. |

| Situation | Solution |
|---|---|
| Defect micro switch. | Replace the electronic board of the Dolby 3D color wheel unit. |
| Mechanical mechanism is blocked. The color wheel can not be moved back and forward by hand. Note that to move the color wheel manually you have to remove the light processor unit from the projector. | Replace the whole Dolby 3D color wheel unit in case you can not unlock the color wheel. Send the blocked unit back to Barco. |
| Malfunction retraction motor. | Replace the whole Dolby 3D color wheel unit. Send the malfunction unit back to Barco. |

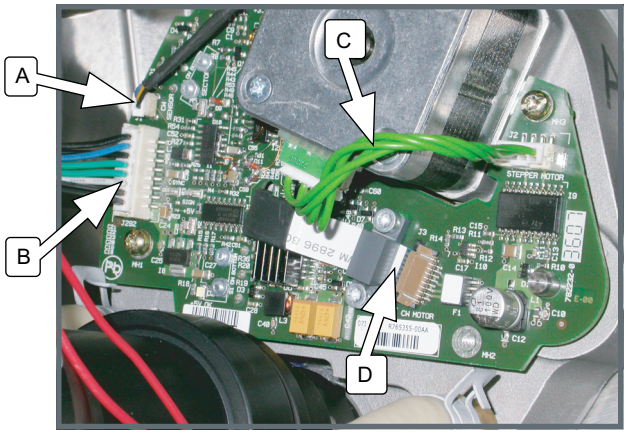


Image 18–98 Dolby 3D color wheel board connections.

**A** Spinning motor feedback circuit.
**B** Connection with Formatting Interface Board.
**C** Wire unit between retraction motor and electronic board.
**D** Wire unit between spinning motor and electronic board.

## Code 5892: “3d module - color wheel out failed” (Error)

| Situation | Solution |
|---|---|
| Exceptional software failure. | Reboot the projector. |
| Retraction motor disconnected. | Check if the wire unit (reference C Image 18–99) of the retraction motor is well inserted. Replace wire unit if damaged. |
| Defect micro switch. | Replace the electronic board of the Dolby 3D color wheel unit. |
| Mechanical mechanism is blocked. The color wheel can not be moved back and forward by hand. Note that to move the color wheel manually you have to remove the light processor unit from the projector. | Replace the whole Dolby 3D color wheel unit in case you can not unlock the color wheel. Send the blocked unit back to Barco. |
| Malfunction retraction motor. | Replace the whole Dolby 3D color wheel unit. Send the malfunction unit back to Barco. |

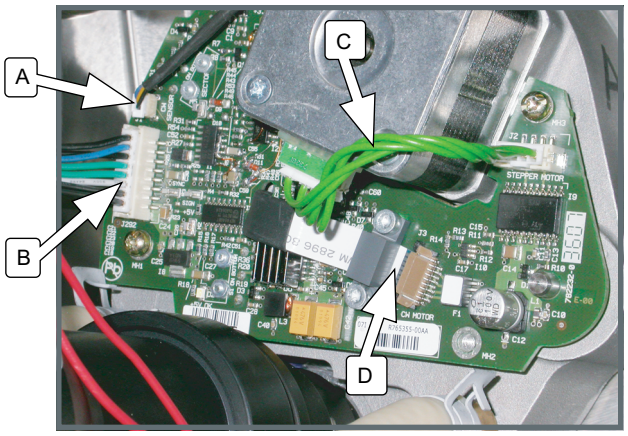


Image 18–99 Dolby 3D color wheel board connections.

**A** Spinning motor feedback circuit.
**B** Connection with Formatting Interface Board.
**C** Wire unit between retraction motor and electronic board.
**D** Wire unit between spinning motor and electronic board.

## Code 5893: “3d module - color wheel temperature too high” (Error)

| Situation | Solution |
|---|---|
| A high light pipe temperature increases the temperature of the Dolby 3D color wheel board. | Check the temperature of the light pipe. |
| Jammed wire unit of the spinning motor. | Check the condition of the wire unit (reference D Image 18–100) of the spinning motor. |
| Malfunction Dolby 3D color wheel board. | Replace the electronic board of the Dolby 3D color wheel unit. |
| Malfunction spinning motor. | Replace the whole Dolby 3D color wheel unit. Send the malfunction unit back to Barco. |

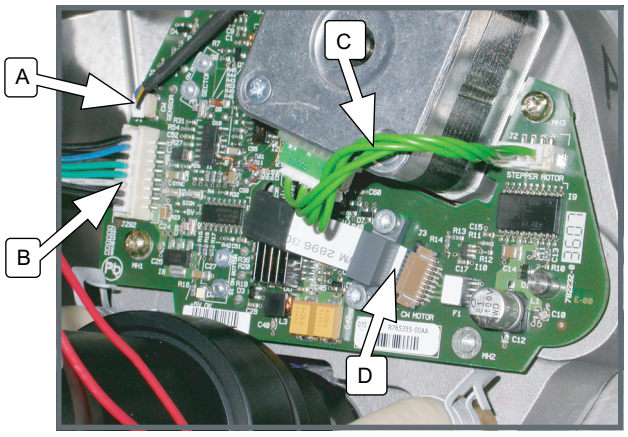


Image 18–100 Dolby 3D color wheel board connections.

**A** Spinning motor feedback circuit.
**B** Connection with Formatting Interface Board.
**C** Wire unit between retraction motor and electronic board.
**D** Wire unit between spinning motor and electronic board.

## Code 5894: “3d module - color wheel speed not ok (not locked)” (Error)

| Situation | Solution |
|---|---|
| Wrong 3D settings on the Dolby 3D content server. | Check the 3D settings on the Dolby 3D content server. See Dolby documentation. The locking frequency for the Dolby 3D color wheel must be in the range of 48 and 72 Hz. You can verify the locking frequency via the Communicator software menu “3D settings - integrated color wheel”. |
| Feedback circuit of the spinning motor disconnected. | Check the connection (reference A Image 18–101) of the feedback circuit. Replace wire unit if damaged. |
| Spinning motor disconnected. | Check the connection (reference D Image 18–101) of the spinning motor. Replace wire unit if damaged. |
| Malfunction Dolby 3D color wheel board. | Replace the electronic board of the Dolby 3D color wheel unit. |
| Malfunction spinning motor | Replace the whole Dolby 3D color wheel unit. Send the malfunction unit back to Barco. |

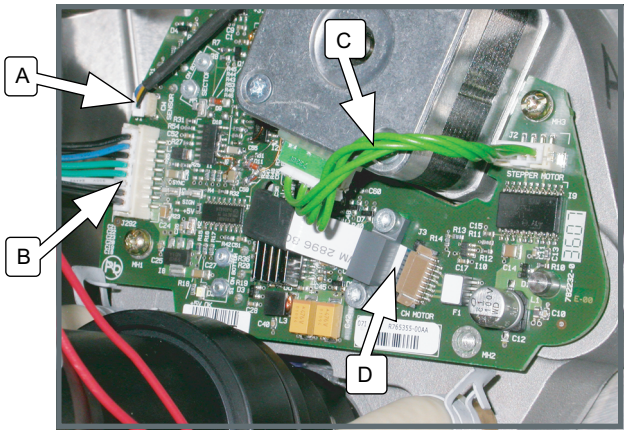


Image 18–101 Dolby 3D color wheel board connections.

**A** Spinning motor feedback circuit.
**B** Connection with Formatting Interface Board.
**C** Wire unit between retraction motor and electronic board.
**D** Wire unit between spinning motor and electronic board.

## Code 5960: “light pipe - temperature too high” (Error)

This error code is probably preceded by the warning code 5961: “light pipe - temperature high”. The same troubleshooting table can be applied to.

## Code 5961: “light pipe - temperature high” (Warning)

| Situation | Solution |
|---|---|
| Interruption of the liquid cooling circuit. | Check if the loop of the liquid cooling circuit is closed. |
| The liquid cooling circuit of the Light Processor Unit is mistakenly excluded from the main liquid cooling circuit. | Reconnect the cooling circuit of the Light Processor Unit with the pump and heat exchanger. |
| The pump of the water cooling is electrical disconnected. | Check if the wire unit (reference 1 Image 18–102) of the pump is properly connected. |
| Blocked filter of the heat exchanger. | Replace the filter. See service manual chapter “Remove and clean both bottom dust filters”, page 576. |
| No or insufficient liquid inside the cooling circuit. The pump | Fill the cooling circuit with liquid. See “Filling the liquid cooling circuit”, page 290 |

| Situation | Solution |
|---|---|
| is sucking air and sounds noisier then normal. | |
| Malfunction pump of the cooling circuit. You don't feel any vibrations when touching the pump after activating the “Refill mode” via the Communicator software. | 1. Check the electrical resistance of the pump winding. Replace the pump if infinite.<br>2. Drain the liquid cooling circuit, open the pump and check if the pump rotor is not blocked. If so, remove the rotor and clean the bearings of the pump. See service manual chapter “Replacement of the Pump (RD to RD)”, page 297. |
| Defect temperature sensor (Reference 2 Image 18–102) on the water cooling block of the Light Pipe entrance. | Replace the temperature sensor on the Light Pipe entrance. |
| Misalignment of the lamp inside the lamp house. | 1. Readjust the Z-alignment of the lamp. See service manual chapter “Automatic lamp alignment motorized lamp house”, page 124.<br>2. Replace the lamp house with a new lamp house. See service manual chapter “Lamps and Lamp House (manual and motorized track1)”, page 69. |
| Misalignment of the cold mirror. | Readjust the cold mirror. See service manual chapter “Adjusting the Cold Mirror”, page 205. |

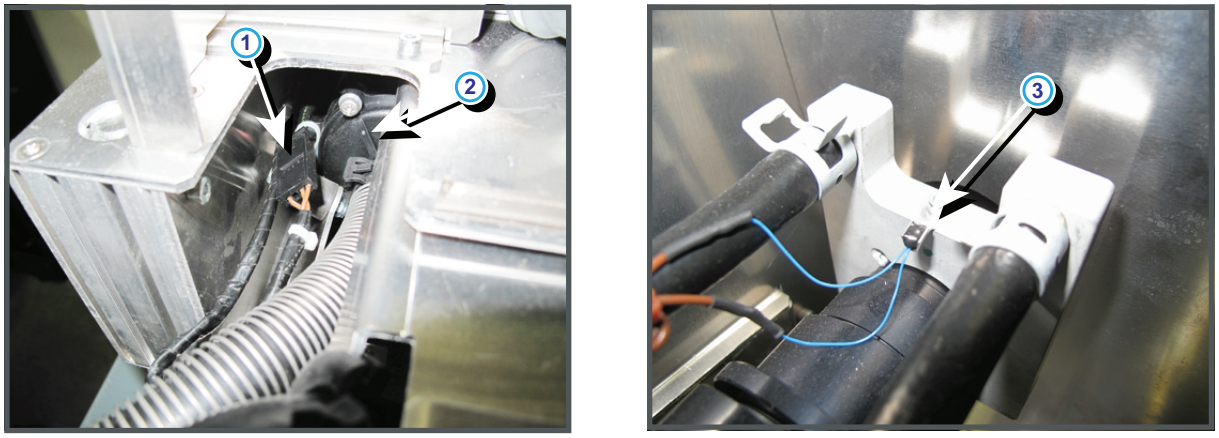


Image 18–102

## Code 5964: “light pipe - temperature sensor open” (Error)

| Situation | Solution |
|---|---|
| Wire unit (reference 1 & 3 Image 18–103) of the temperature sensor is disconnected from the Signal Backplane. | Plug in the wire unit of the temperature sensor into its socket on the Signal Backplane. |
| Damaged wire unit of the temperature (reference 3 Image 18–103) sensor which measures the temperature of the water cooling block of the light pipe entrance. | 1. Repair the wire unit.<br>2. If not repairable, replace the whole wire unit and temperature sensor. |

| Situation | Solution |
|---|---|
| Defect temperature sensor (reference 3 Image 18–103) on the water cooling block of the light pipe entrance. | Replace the temperature sensor. |
| Malfunction Fan Control board. | Replace the Fan Control board. See “Replacement of a Card Cage board”, page 360. |

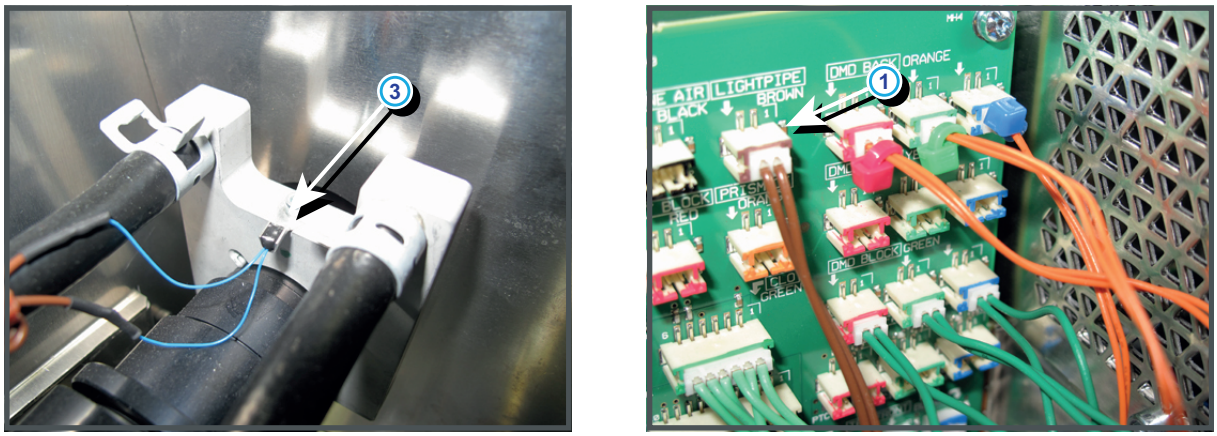


Image 18–103

## Code 5965: “light pipe - temperature sensor short” (Error)

| Situation | Solution |
|---|---|
| Damaged insulation of the wire unit of the temperature sensor (reference 1 & 3 Image 18–104) which measures the temperature of the water cooling block of the light pipe entrance. When disconnecting the wire unit (reference 1 Image 18–104) of the temperature sensor from the Signal Backplane the error code is changed to “light pipe - temperature sensor open”. | 1. Repair the insulation of the wire unit using shrink sleeve.<br>2. If not repairable, replace the whole wire unit and temperature sensor. |
| Defect temperature sensor (reference 3 Image 18–104) on the water cooling block of the light pipe entrance. When disconnecting the wire unit (reference 1 Image 18–104) of the temperature sensor from the Formatting Interface Board the error code is changed to “light pipe - temperature sensor open”. | Replace the temperature sensor. |
| Malfunction Fan Control board. | Replace the Fan Control board. See “Replacement of a Card Cage board”, page 360. |

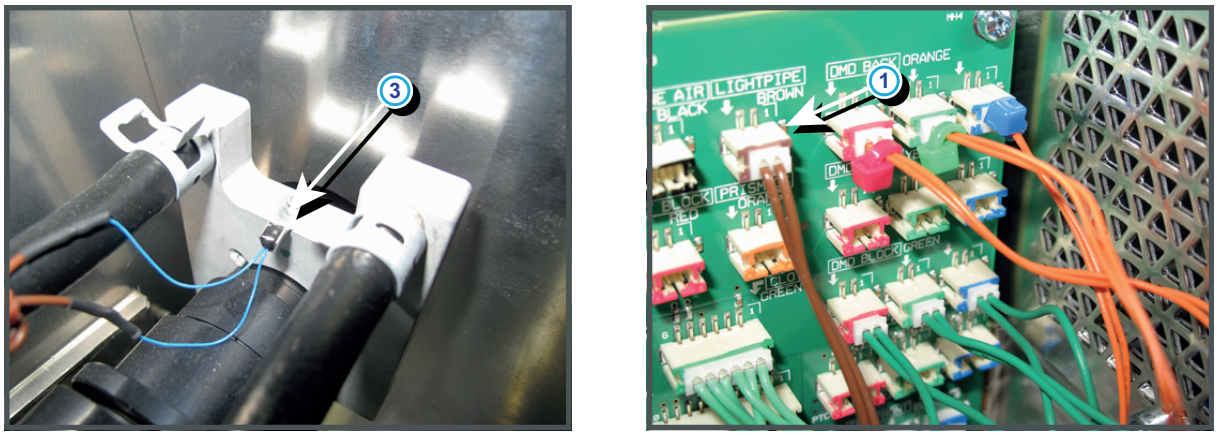


Image 18–104

## Code 5970: “dmd red front - temperature too high” (Error)

This error code is probably preceded by the warning code 5971 : “dmd red front - temperature high”. The same troubleshooting table can be applied.

## Code 5971: “dmd red front - temperature high” (Warning)

| Situation | Solution |
|---|---|
| The wire unit of the temperature sensor at the front of the DMD is mistakenly switched with one of the wire units of the other temperature sensors of the Light Processor Unit. | Check if all wire units of the temperature sensors (reference 1, 2 & 3 of Image 18–105) are plugged into their respective sockets on the Signal Backplane. |
| The wire units of the Peltier elements (TEC's), mounted on the common cooling block of the heat pipes, are mistakenly switched. | Check if all wire units (reference 11, 12 & 13 of Image 18–105) of the Peltier elements are plugged into their respective sockets on the Signal Backplane. |
| No thermal contact between heat pipes and common cooling block due to loose screws. | Check if the four screws, which attach the heat pipes of the involved channel to the common cooling block, are fastened. |
| Malfunction Peltier element (TEC) between heat pipes and common cooling block. Use the “diode test” of a multi-meter to check out the Peltier. Polarity does not matter. The Peltier is OK in case the measured value is higher then 0,01 volt. | Remove the light processor from its compartment and replace the malfunction Peltier. If problem persist, contact Barco for further instructions. |

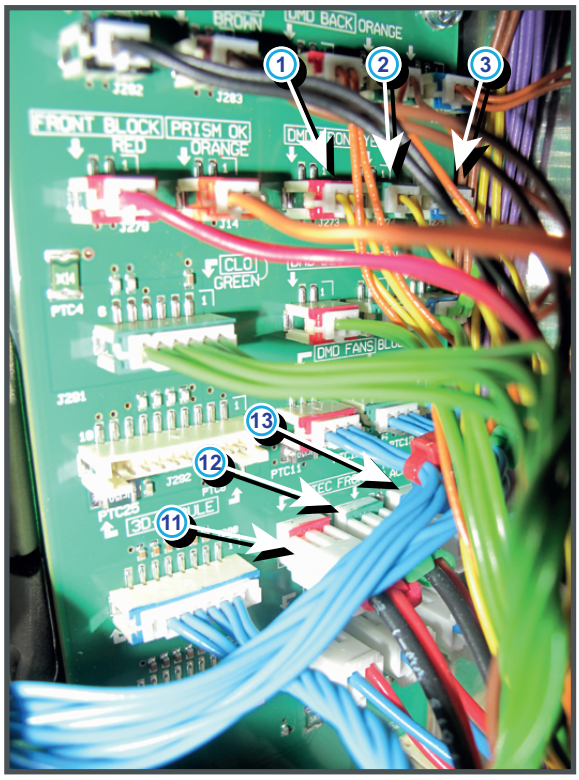


Image 18–105

## Code 5973: “dmd red front - temperature low” (Warning)

| Situation | Solution |
|---|---|
| DMD temperature low. | Make sure that the ambient temperature is within specs. Let the projector acclimate to the normal room temperature which should be higher then 10° C (50°F) and lower then 35°C (95°F). Do not ignite the lamp, otherwise there is a risk for condensate. |
| Malfunction Fan Control board. TEC (Peltier) is continuously on. | Replace the Fan Control board. See “Replacement of a Card Cage board”, page 360. |
| The temperature on the front side of the DMD of the red channel is low. | If this problem persist, contact Barco for further instructions. |

## Code 5974: “dmd red front - temperature sensor open” (Error)

| Situation | Solution |
|---|---|
| Wire unit (reference 1 Image 18–105) of the temperature sensor is disconnected from the Signal Backplane. | Plug in the wire unit of the temperature sensor into its socket on the Signal Backplane. |
| Damaged wire unit of the temperature sensor which measures the temperature at the front side of the DMD of the red channel. | 1. Repair the wire unit.<br>2. If not repairable, replace the whole Light Processor Unit. Contact Barco for further instructions to repair the malfunction light processor. |
| Defect temperature sensor which measures the temperature at the front side of the DMD of the red channel. | Replace the whole Light Processor Unit. Contact Barco for further instructions to repair the malfunction light processor. |

## Code 5975: “dmd red front - temperature sensor short” (Error)

| Situation | Solution |
|---|---|
| Damaged insulation of the wire unit of the temperature sensor which measures the temperature at the front side of the DMD of the red channel. When disconnecting the wire unit (reference 1 Image 18–105) of the temperature sensor from the Signal Backplane the error code is changed to “dmd red front - temperature sensor open”. | 1. Repair the insulation of the wire unit using shrink sleeve<br>2. If not repairable, replace the whole Light Processor Unit. Contact Barco for further instructions to repair the malfunction light processor. |
| Defect temperature sensor which measures the temperature at the front side of the DMD of the red channel. | Replace the whole Light Processor Unit. Contact Barco for further instructions to repair the malfunction light processor. |

## Code 5980: “dmd green front - temperature too high” (Error)

This error code is probably preceded by the warning code 5981: “dmd green front - temperature high”. The same troubleshooting table can be applied.

## Code 5981: “dmd green front - temperature high” (Warning)

| Situation | Solution |
|---|---|
| The wire unit of the temperature sensor at the front of the DMD is mistakenly switched with one of the wire units of the other temperature sensors of the Light Processor Unit. | Check if all wire units of the temperature sensors (reference 1, 2 & 3 of Image 18–105) are plugged into their respective sockets on the Signal Backplane. |
| The wire units of the Peltier elements (TEC's), mounted on the common cooling block of the heat pipes, are mistakenly switched. | Check if all wire units (reference 11, 12 & 13 of Image 18–105) of the Peltier elements are plugged into their respective sockets on the Signal Backplane. |

| Situation | Solution |
|---|---|
| No thermal contact between heat pipes and common cooling block due to loose screws. | Check if the four screws, which attach the heat pipes of the involved channel to the common cooling block, are fastened. |
| Malfunction Peltier element (TEC) between heat pipes and common cooling block. Use the “diode test” of a multi-meter to check out the Peltier. Polarity does not matter. The Peltier is OK in case the measured value is higher then 0,01 volt. | Remove the light processor from its compartment and replace the malfunction Peltier. If problem persist, contact Barco for further instructions. |

## Code 5983: “dmd green front - temperature low” (Warning)

| Situation | Solution |
|---|---|
| DMD temperature low. | Make sure that the ambient temperature is within specs. Let the projector acclimate to the normal room temperature which should be higher then 10° C (50°F) and lower then 35°C (95°F). Do not ignite the lamp, otherwise there is a risk for condensate. |
| Malfunction Fan Control board. TEC (Peltier) is continuously on. | Replace the Fan Control board. See “Replacement of a Card Cage board”, page 360. |
| The temperature on the front side of the DMD of the green channel is low. | If this problem persist, contact Barco for further instructions. |

## Code 5984: “dmd green front - temperature sensor open” (Error)

| Situation | Solution |
|---|---|
| Wire unit (reference 2 Image 18–105) of the temperature sensor is disconnected from the Signal backplane | Plug in the wire unit of the temperature sensor into its socket on the Signal backplane. |
| Damaged wire unit of the temperature sensor which measures the temperature at the front side of the DMD of the green channel. | 1. Repair the wire unit.<br>2. If not repairable, replace the whole Light Processor Unit. Contact Barco for further instructions to repair the malfunction light processor. |
| Defect temperature sensor which measures the temperature at the front side of the DMD of the green channel. | Replace the whole Light Processor Unit. Contact Barco for further instructions to repair the malfunction light processor. |

## Code 5985: “dmd green front - temperature sensor short” (Error)

| Situation | Solution |
|---|---|
| Damaged insulation of the wire unit of the temperature sensor which measures the temperature at the front side of the DMD of the green channel. When disconnecting the wire unit (reference 2 Image 18–105) of the temperature sensor from the Signal backplane the error code is changed to “dmd green front - temperature sensor open”. | 1. Repair the insulation of the wire unit using shrink sleeve<br>2. If not repairable, replace the whole Light Processor Unit. Contact Barco for further instructions to repair the malfunction light processor. |
| Defect temperature sensor which measures the temperature at the front side of the DMD of the green channel. | Replace the whole Light Processor Unit. Contact Barco for further instructions to repair the malfunction light processor. |

## Code 5990: “dmd blue front - temperature too high” (Error)

This error code is probably preceded by the warning code 5991: “dmd blue front - temperature high”. The same troubleshooting table can be applied.

## Code 5991: “dmd blue front - temperature high” (Warning)

| Situation | Solution |
|---|---|
| The wire unit of the temperature sensor at the front of the DMD is mistakenly switched with one of the wire units of the other temperature sensors of the Light Processor Unit. | Check if all wire units of the temperature sensors (reference 1, 2 & 3 of Image 18–105) are plugged into their respective sockets on the Signal Backplane. |
| The wire units of the Peltier elements (TEC's), mounted on the common cooling block of the heat pipes, are mistakenly switched. | Check if all wire units (reference 11, 12 & 13 of Image 18–105) of the Peltier elements are plugged into their respective sockets on the Signal Backplane. |
| No thermal contact between heat pipes and common cooling block due to loose screws. | Check if the four screws, which attach the heat pipes of the involved channel to the common cooling block, are fastened. |
| Malfunction Peltier element (TEC) between heat pipes and common cooling block. Use the “diode test” of a multi-meter to check out the Peltier. Polarity does not matter. The Peltier is OK in case the measured value is higher then 0,01 volt. | Remove the light processor from its compartment and replace the malfunction Peltier. If problem persist, contact Barco for further instructions. |

## Code 5993: “dmd blue front - temperature low” (Warning)

| Situation | Solution |
|---|---|
| DMD temperature low. | Make sure that the ambient temperature is within specs. Let the projector acclimate to the normal room temperature which should be higher then 10° C (50°F) and lower then 35°C (95°F). Do not ignite the lamp, otherwise there is a risk for condensate. |
| Malfunction Fan Control board. TEC (Peltier) is continuously on. | Replace the Fan Control board. See “Replacement of a Card Cage board”, page 360. |
| The temperature on the front side of the DMD of the blue channel is low. | If this problem persist, contact Barco for further instructions. |

## Code 5994: “dmd blue front - temperature sensor open” (Error)

| Situation | Solution |
|---|---|
| Wire unit (reference 3 Image 18–105) of the temperature sensor is disconnected from the Signal backplane. | Plug in the wire unit of the temperature sensor into its socket on the Signal Backplane. |
| Damaged wire unit of the temperature sensor which measures the temperature at the front side of the DMD of the blue channel. | 1. Repair the wire unit.<br>2. If not repairable, replace the whole Light Processor Unit. Contact Barco for further instructions to repair the malfunction light processor. |
| Defect temperature sensor which measures the temperature at the front side of the DMD of the blue channel. | Replace the whole Light Processor Unit. Contact Barco for further instructions to repair the malfunction light processor. |

## Code 5995: “dmd blue front - temperature sensor short” (Error)

| Situation | Solution |
|---|---|
| Damaged insulation of the wire unit of the temperature sensor which measures the temperature at the front side of the DMD of the blue channel. When disconnecting the wire unit (reference 3Image 18–105) of the temperature sensor from the Signal Backplane the error code is changed to “dmd blue front - temperature sensor open”. | 1. Repair the insulation of the wire unit using shrink sleeve<br>2. If not repairable, replace the whole Light Processor Unit. Contact Barco for further instructions to repair the malfunction light processor. |
| Defect temperature sensor which measures the temperature at the front side of the DMD of the red channel. | Replace the whole Light Processor Unit. Contact Barco for further instructions to repair the malfunction light processor. |

## Code 6000: “block front - temperature too high” (Error)

This error code is probably preceded by the warning code 6001: “block front - temperature high”. The same troubleshooting table can be applied.

## Code 6001: “block front - temperature high” (Warning)

| Situation | Solution |
|---|---|
| Interruption of the liquid cooling circuit. | Check if the loop of the liquid cooling circuit is closed. |
| The liquid cooling circuit of the Light Processor Unit is mistakenly excluded from the main liquid cooling circuit. | Reconnect the cooling circuit of the Light Processor Unit with the pump and heat exchanger. |
| The pump of the water cooling is electrical disconnected. | Check if the wire unit (reference 1 & 2 Image 18–23) of the pump is properly connected. To check if the wire unit is properly connected the cooling assembly has to be a few cm pulled out of the projector chassis. |
| Blocked dust filter of the heat exchanger (bottom side). | Clean or replace the dust filter. |
| No or insufficient liquid inside the cooling circuit. The pump is sucking air and sounds noisier then normal. | Start the top up procedure to fill the cooling circuit with liquid. See “Liquid Cooling Circuit”, page 281. |
| Malfunction pump of the cooling circuit. You don't feel any vibrations when touching the pump after activating the “Refill mode” via the Communicator software. | 1. Check the electrical resistance of the pump winding. Replace the pump if infinite. See “Replacement of the Pump (RD to RD)”, page 297.<br>2. Drain the liquid cooling circuit, open the pump and check if the pump rotor is not blocked. If so, remove the rotor and clean the bearings of the pump. See “Liquid Cooling Circuit”, page 281. |

## Code 6004: “block front - temperature sensor open” (Error)

| Situation | Solution |
|---|---|
| Wire unit of the temperature sensor is disconnected from the Signal backplane (reference 15Image 18–106). | Plug in the wire unit of the temperature sensor into its socket on the Signal backplane. |
| Damaged wire unit of the temperature sensor which measures the temperature of the common water cooling block of the heat pipes which drain the heat from the front of the DMD's. | 1. Repair the wire unit.<br>2. If not repairable, replace the Light Processor Unit. Contact Barco for further instructions to repair the malfunction Light Processor Unit. |
| Defect temperature sensor which measures the temperature (reference 5 Image 18–106) of the common water cooling block of the heat pipes which drain the heat from the front of the DMD's. | Replace the Light Processor Unit. Contact Barco for further instructions to repair the malfunction Light Processor Unit. |

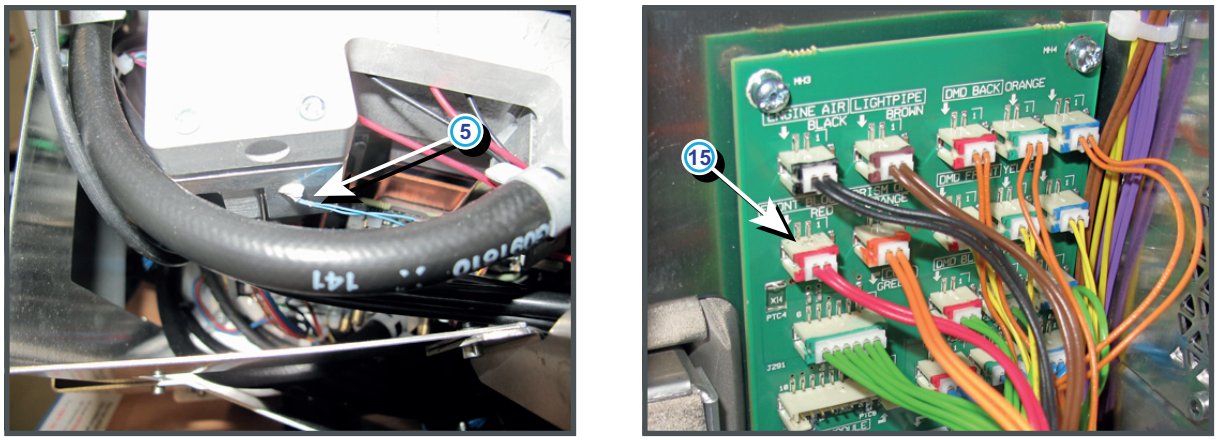


Image 18–106

## Code 6005: “block front - temperature sensor short” (Error)

| Situation | Solution |
|---|---|
| Damaged insulation of the wire unit (reference 5 Image 18–106) of the temperature sensor which measures the temperature of the common water cooling block of the heat pipes which drain the heat from the front of the DMD's. When disconnecting the wire the wire unit of the temperature sensor from the Signal backplane the error coded is changed to “block front - temperature sensor open”. | 1. Repair the insulation of the wire unit using shrink sleeve.<br>2. If not repairable, replace the Light Processor Unit. Contact Barco for further instructions to repair the malfunction Light Processor Unit. |
| Defect temperature sensor which measures the temperature of the common water cooling block of the heat pipes which drain the heat from the front of the DMD's. When disconnecting the wire the wire unit of the temperature sensor from the Signal backplane the error coded is changed to “block front - temperature sensor open”. | Replace the Light Processor Unit. Contact Barco for further instructions to repair the malfunction Light Processor Unit. |

## Code 6010: “block red - temperature too high” (Error)

This error code is probably preceded by the warning code 6011: “block red - temperature high”. The same troubleshooting table can be applied.

## Code 6011: “block red - temperature high” (Warning)

| Situation | Solution |
|---|---|
| Interruption of the liquid cooling circuit. | Check if the loop of the liquid cooling circuit is closed. |
| The liquid cooling circuit of the Light Processor Unit is mistakenly excluded from the main liquid cooling circuit. | Reconnect the cooling circuit of the Light Processor Unit with the pump and heat exchanger. |
| The pump of the water cooling is electrical disconnected. | Check if the wire unit is connected with the pump (reference 1 Image 18–107) and with the Signal Backplane (reference 2 Image 18–107). |
| Blocked high density filter of the heat exchanger (bottom filter). | Clean or replace the high density filter. See xxxx. |
| No or insufficient liquid inside the cooling circuit. The pump is sucking air and sounds noisier then normal. | Check the liquid cooling reservoir. See xxxx. |
| Malfunction pump of the cooling circuit. You don't feel any vibrations when touching the pump after activating the “Refill mode” via the Communicator software. | 1. Check the electrical resistance of the pump winding. Replace the pump if infinite. See xxxx.<br>2. Drain the liquid cooling circuit, open the pump and check if the pump rotor is not blocked. If so, remove the rotor and clean the bearings of the pump. See xxxx. |

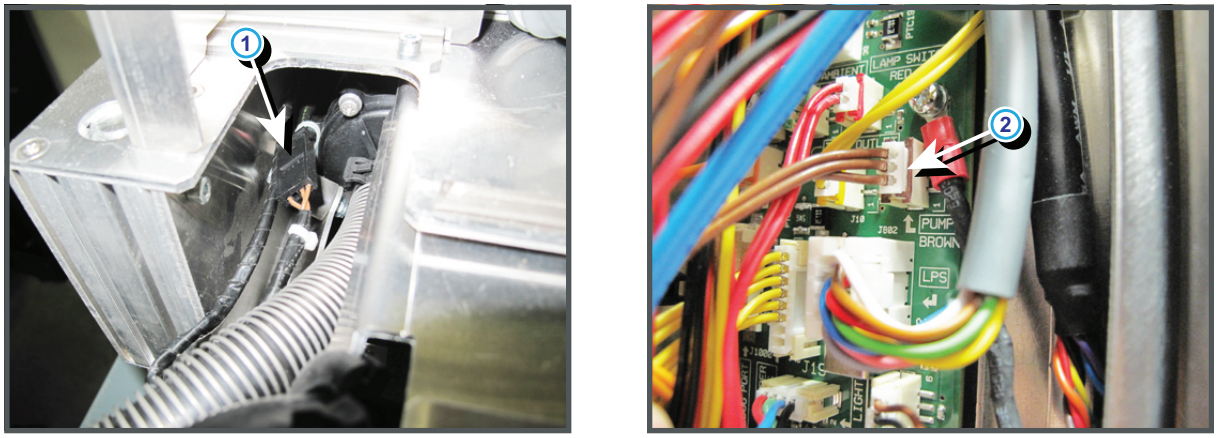


Image 18–107

## Code 6014: “block red - temperature sensor open” (Error)

| Situation | Solution |
|---|---|
| Wire unit (reference 11 Image 18–108) of the temperature sensor is disconnected from the Signal backplane. | Plug in the wire unit of the temperature sensor into its socket on the Signal backplane. |
| Damaged wire unit of the temperature sensor (reference 1 Image 18–108) which measures the temperature of the water cooling block of the red channel. | 1. Repair the wire unit.<br>2. If not repairable, replace the whole wire unit and temperature sensor. |
| Defect temperature sensor on the water cooling block of the red channel. (reference 1 Image 18–108) | Replace the temperature sensor. |

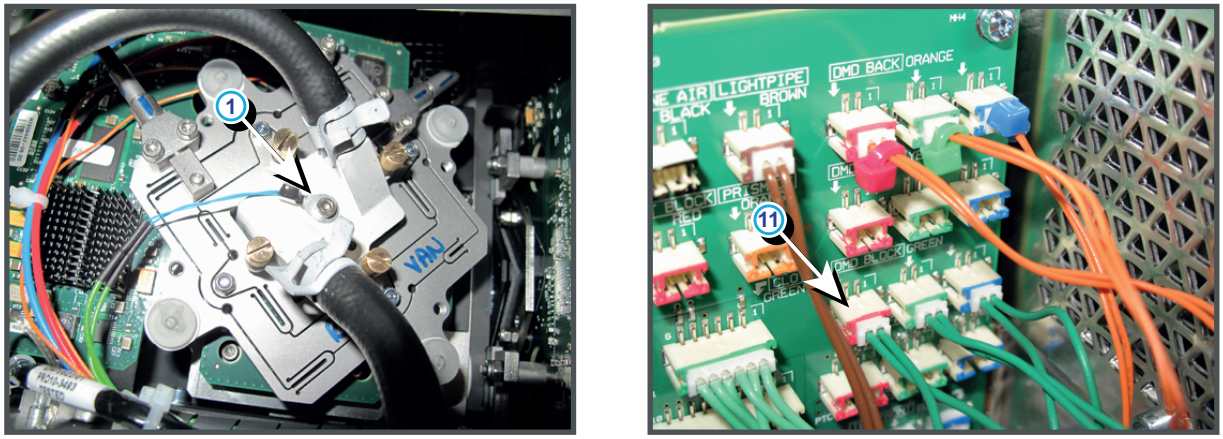


Image 18–108

## Code 6015: “block red- temperature sensor short” (Error)

| Situation | Solution |
|---|---|
| Damaged insulation of the wire unit of the temperature sensor (reference 1 Image 18–109) which measures the temperature of the water cooling block of the red channel. When disconnecting the wire unit (reference 11 Image 18–109) of the temperature sensor from the Signal backplane the error code is changed to “block red - temperature sensor open”. | 1. Repair the insulation of the wire unit using shrink sleeve.<br>2. If not repairable, replace the whole wire unit and temperature sensor. |
| Defect temperature sensor on the water cooling block of the red channel. When disconnecting the wire unit of the temperature sensor from the Signal backplane the error code is changed to “block red - temperature sensor open”. | Replace the temperature sensor. |

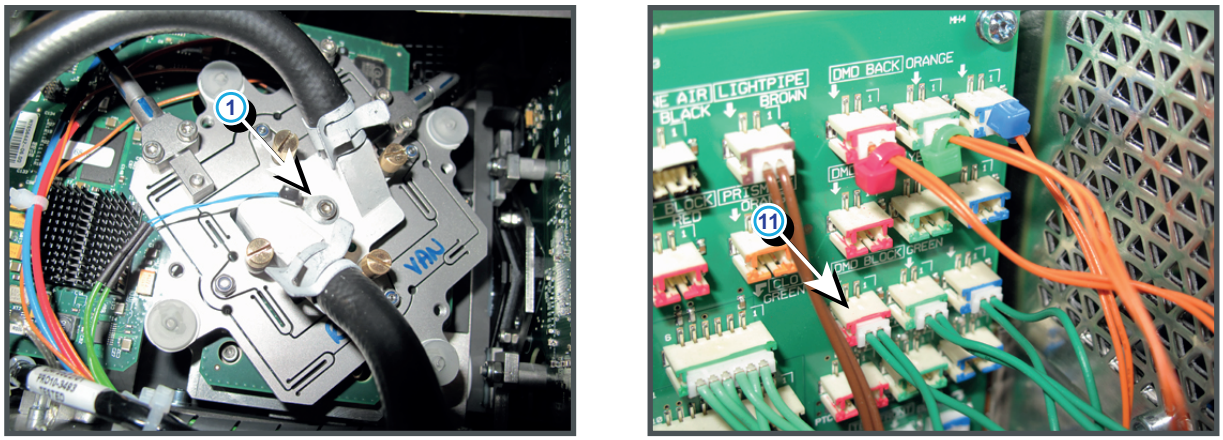


Image 18–109

## Code 6020: “block green - temperature too high” (Error)

This error code is probably preceded by the warning code 6021 : “block green - temperature high”. The same troubleshooting table can be applied.

## Code 6021: “block green - temperature high” (Warning)

| Situation | Solution |
|---|---|
| Interruption of the liquid cooling circuit. | Check if the loop of the liquid cooling circuit is closed. |
| The liquid cooling circuit of the Light Processor Unit is mistakenly excluded from the main liquid cooling circuit. | Reconnect the cooling circuit of the Light Processor Unit with the pump and heat exchanger. |
| The pump of the water cooling is electrical disconnected. | Check if the wire unit is connected with the pump (reference 1 Image 18–110) and with the Signal Backplane (reference 2 Image 18–110). |
| Blocked high density filter of the heat exchanger (bottom filter). | Clean or replace the high density filter. See xxxx. |
| No or insufficient liquid inside the cooling circuit. The pump is sucking air and sounds noisier then normal. | Check the liquid cooling reservoir. See xxxx. |
| Malfunction pump of the cooling circuit. You don't feel any vibrations when touching the pump after activating the “Refill mode” via the Communicator software. | 1. Check the electrical resistance of the pump winding. Replace the pump if infinite. See xxxx.<br>2. Drain the liquid cooling circuit, open the pump and check if the pump rotor is not blocked. If so, remove the rotor and clean the bearings of the pump. See xxxx. |

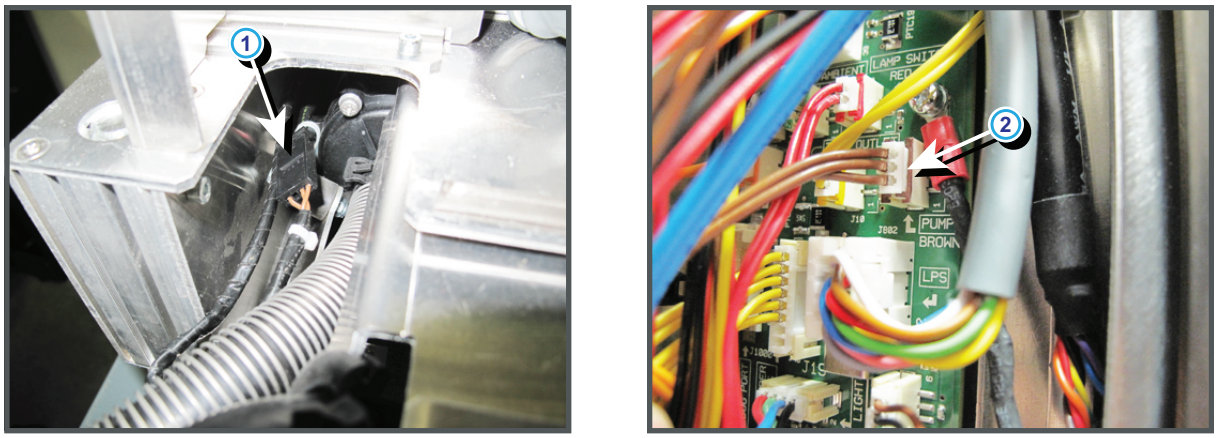


Image 18–110

## Code 6024: “block green - temperature sensor open” (Error)

| Situation | Solution |
|---|---|
| Wire unit (reference 12 Image 18–111) of the temperature sensor is disconnected from the Signal backplane. | Plug in the wire unit of the temperature sensor into its socket on the Signal backplane. |
| Damaged wire unit of the temperature sensor (reference 2 Image 18–111) which measures the temperature of the water cooling block of the red channel. | 1. Repair the wire unit.<br>2. If not repairable, replace the whole wire unit and temperature sensor. |
| Defect temperature sensor on the water cooling block of the green channel. (reference 2 Image 18–111) | Replace the temperature sensor. |

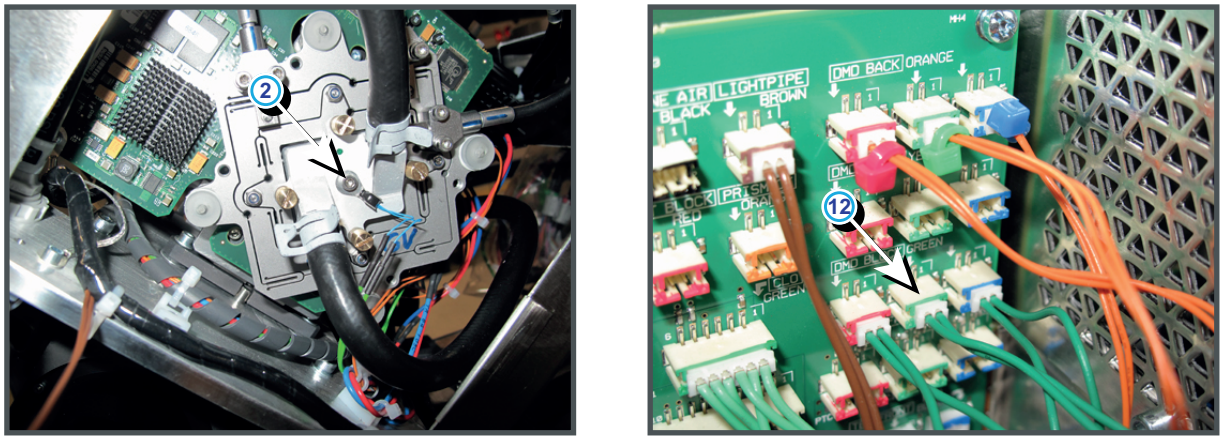


Image 18–111

## Code 6025: “block green - temperature sensor short” (Error)

| Situation | Solution |
|---|---|
| Damaged insulation of the wire unit of the temperature sensor (reference 2 Image 18–112) which measures the temperature of the water cooling block of the green channel. When disconnecting the wire unit (reference 12 Image 18–112) of the temperature sensor from the Signal backplane the error code is changed to “block green - temperature sensor open”. | 1. Repair the insulation of the wire unit using shrink sleeve.<br>2. If not repairable, replace the whole wire unit and temperature sensor. |
| Defect temperature sensor on the water cooling block of the red channel. When disconnecting the wire unit of the temperature sensor from the Signal backplane the error code is changed to “block green - temperature sensor open”. | Replace the temperature sensor. |

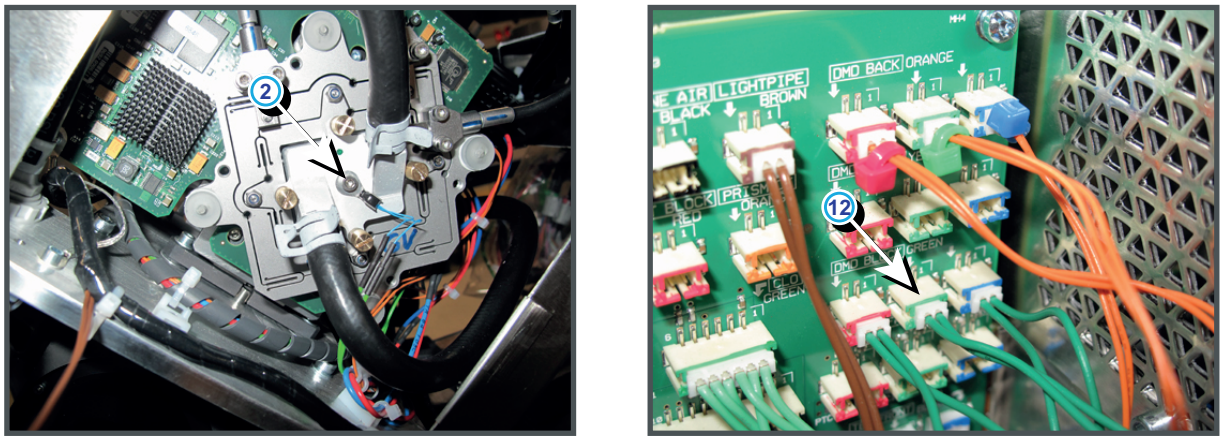


Image 18–112

## Code 6030: “block blue - temperature too high” (Error)

This error code is probably preceded by the warning code 6031: “block blue - temperature high”. The same troubleshooting table can be applied.

## Code 6031: “block blue - temperature high” (Warning)

| Situation | Solution |
|---|---|
| Interruption of the liquid cooling circuit. | Check if the loop of the liquid cooling circuit is closed. |
| The liquid cooling circuit of the Light Processor Unit is mistakenly excluded from the main liquid cooling circuit. | Reconnect the cooling circuit of the Light Processor Unit with the pump and heat exchanger. |
| The pump of the water cooling is electrical disconnected. | Check if the wire unit is connected with the pump (reference 1 Image 18–113) and with the Signal Backplane (reference 2 Image 18–113). |

| Situation | Solution |
|---|---|
| Blocked high density filter of the heat exchanger (bottom filter). | Clean or replace the high density filter. See xxxx. |
| No or insufficient liquid inside the cooling circuit. The pump is sucking air and sounds noisier then normal. | Check the liquid cooling reservoir. See xxxx. |
| Malfunction pump of the cooling circuit. You don't feel any vibrations when touching the pump after activating the “Refill mode” via the Communicator software. | 1. Check the electrical resistance of the pump winding. Replace the pump if infinite. See xxxx.<br>2. Drain the liquid cooling circuit, open the pump and check if the pump rotor is not blocked. If so, remove the rotor and clean the bearings of the pump. See xxxx. |

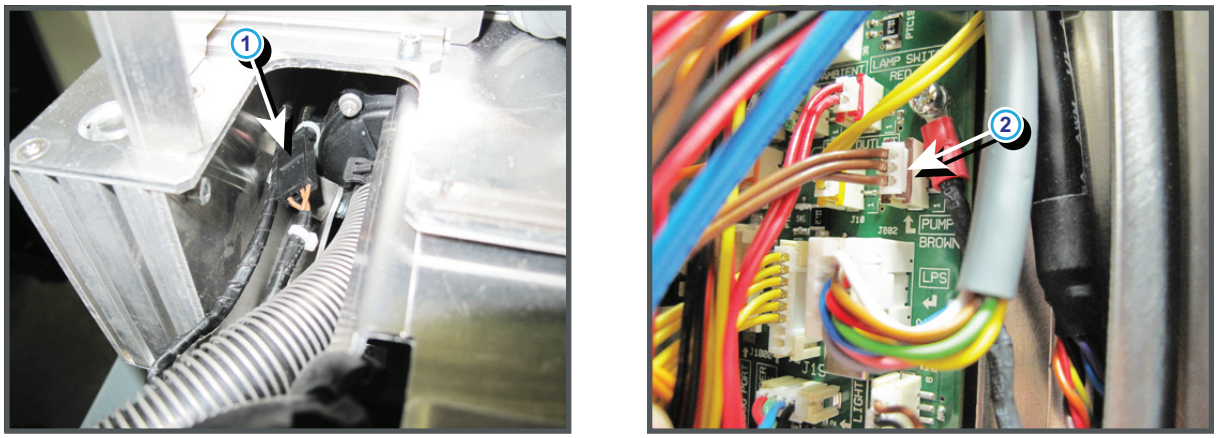


Image 18–113

## Code 6034: “block blue - temperature sensor open” (Error)

| Situation | Solution |
|---|---|
| Wire unit (reference 13 Image 18–114) of the temperature sensor is disconnected from the Signal backplane. | Plug in the wire unit of the temperature sensor into its socket on the Signal backplane. |
| Damaged wire unit of the temperature sensor (reference 3 Image 18–114) which measures the temperature of the water cooling block of the blue channel. | 1. Repair the wire unit.<br>2. If not repairable, replace the whole wire unit and temperature sensor. |
| Defect temperature sensor on the water cooling block of the blue channel. (reference 3 Image 18–114) | Replace the temperature sensor. |

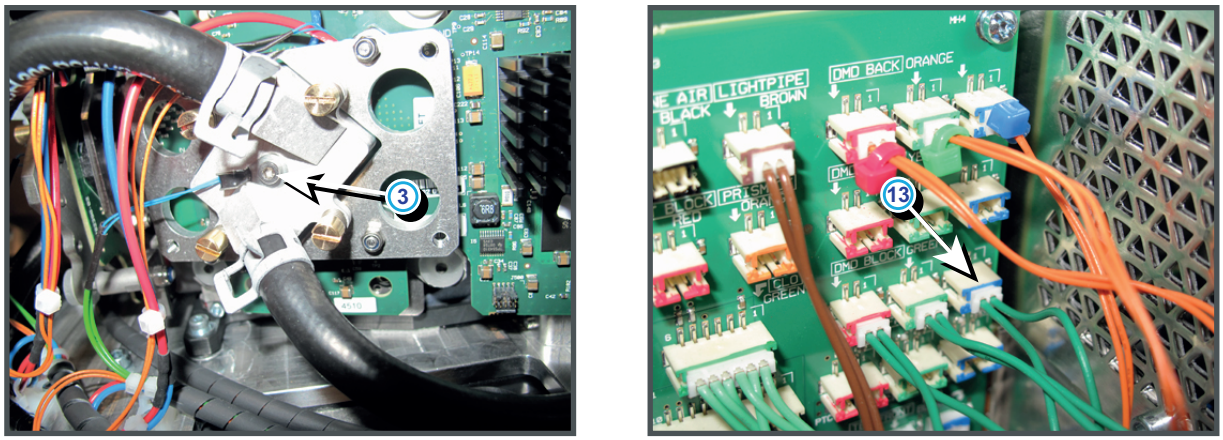


Image 18–114

## Code 6035: “block blue - temperature sensor short” (Error)

| Situation | Solution |
|---|---|
| Damaged insulation of the wire unit of the temperature sensor (reference 3 Image 18–115) which measures the temperature of the water cooling block of the blue channel. When disconnecting the wire unit (reference 13 Image 18–115) of the temperature sensor from the Signal backplane the error code is changed to “block blue - temperature sensor open”. | 1. Repair the insulation of the wire unit using shrink sleeve.<br>2. If not repairable, replace the whole wire unit and temperature sensor. |
| Defect temperature sensor on the water cooling block of the blue channel. When disconnecting the wire unit of the temperature sensor from the Signal backplane the error code is changed to “block blue - temperature sensor open”. | Replace the temperature sensor. |

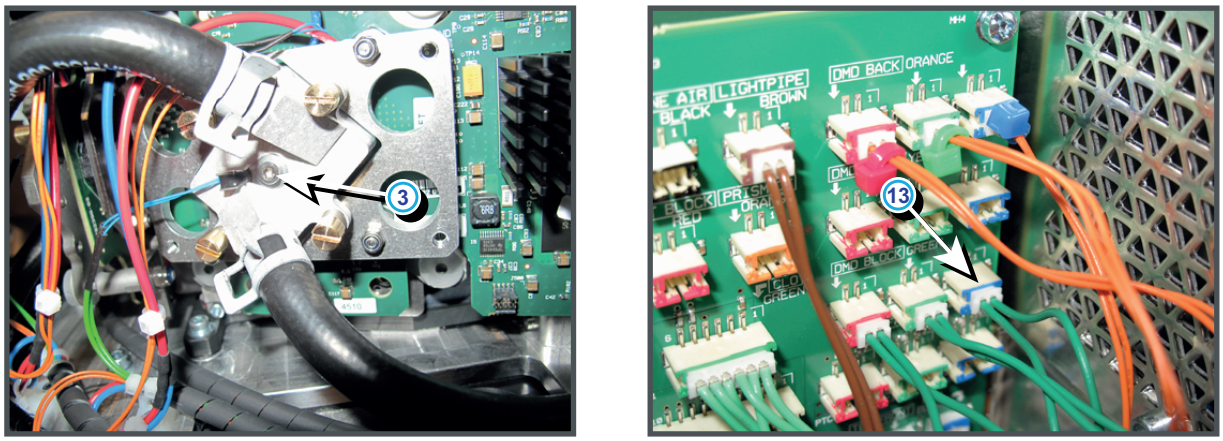


Image 18–115

## Code 6040: “engine air - temperature too high” (Error)

This error code is probably preceded by the warning code 6041: “engine air - temperature high”. The same troubleshooting table can be applied.

## Code 6041: “engine air - temperature high” (Warning)

| Situation | Solution |
|---|---|
| Filthy air filter of the heat exchanger. | Clean or replace the air filter of the heat exchanger. |
| Filthy air filter of the electronics. | Clean or replace the air filter at the front side of the projector. |
| Malfunction air extraction system. | Check customer air extraction system for adequate extraction. The air extraction system must be capable of removing minimum 10 m³/min or 350 CFM per installed DP-2000/DP-1500 digital projector. |
| Malfunction ambient temperature sensor (reference 4 Image 18–116) of the Light Processor unit. | Replace the temperature sensor. |

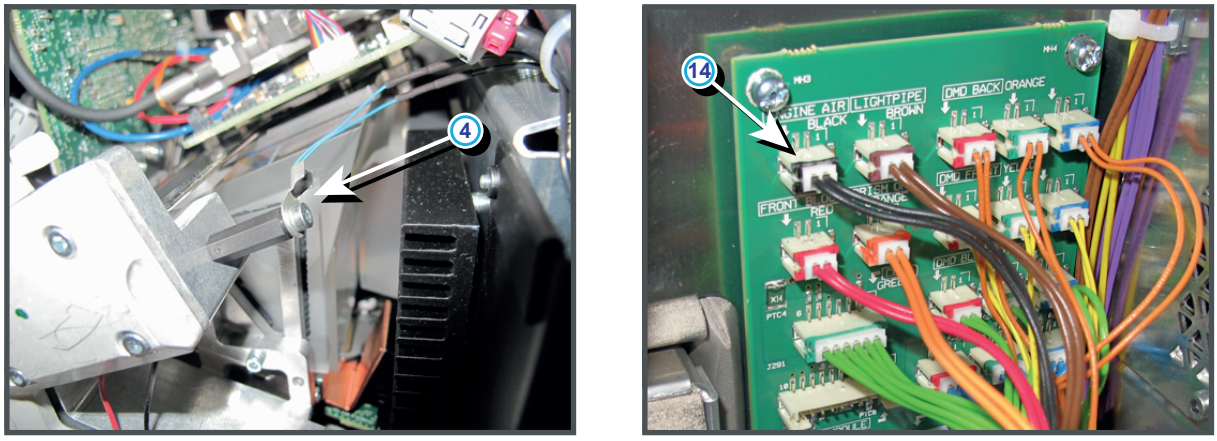


Image 18–116

## Code 6044: “engine air - temperature sensor open” (Error)

| Situation | Solution |
|---|---|
| Wire unit (reference 14Image 18–116) of the temperature sensor is disconnected from the Formatting Interface Board. | Plug the wire unit of the temperature sensor into its socket on the Formatting Interface Board. |
| Damaged wire unit of the temperature sensor (reference 4 Image 18–116). | 1. Repair the wire unit.<br>2. If not repairable, replace the whole wire unit and temperature sensor. |
| Defect temperature sensor (reference 4 Image 18–116). | Replace the temperature sensor. |

## Code 6045: “engine air - temperature sensor short” (Error)

| Situation | Solution |
|---|---|
| Damaged insulation of the wire unit of the temperature sensor (reference 4 Image 18–116), which measures the temperature inside the compartment of the Light Processor Unit. When disconnecting the wire unit of the temperature sensor from the Signal Backplane (reference 14 Image 18–116) the error code is changed to “engine air - temperature sensor open”. | 1. Repair the insulation of the wire unit using shrink sleeve.<br>2. If not repairable, replace the whole wire unit and temperature sensor. |
| Defect temperature sensor (reference 4Image 18–116) of the Light Processor Unit. When disconnecting the wire unit of the temperature sensor from the Signal Backplane (reference 14 Image 18–116) the error code is changed to “engine air - temperature sensor open”. | Replace the whole wire unit and temperature sensor. |

## Code 6050: “dmd - temperature hardware protection warning” (Warning)

| Situation | Solution |
|---|---|
| DMD temperature low. | Make sure that the ambient temperature is within specs. Let the projector acclimate to the normal room temperature which should be higher then 10° C (50°F) and lower then 35°C (95°F). Do not ignite the lamp, otherwise there is a risk for condensate. |
| DMD temperature high. | Check all cooling systems: Liquid cooling, air extraction system, dust filters, ... |

## Code 6061: “+24v - voltage high” (Warning)

| Situation | Solution |
|---|---|
| Malfunction Fan Control board or SMPS board. | Measure on the Signal Backplane the +24V voltage on pin 9, 10, 11 or 12 of the connector of the black wire unit which comes from the SMPS board. See Image 18–117.<br>If the measured voltage is about 24V then replace the Fan Control board. See “Replacement of a Card Cage board”, page 360. Otherwise replace the SMPS board. See “Replacement of the SMPS board”, page 368. |

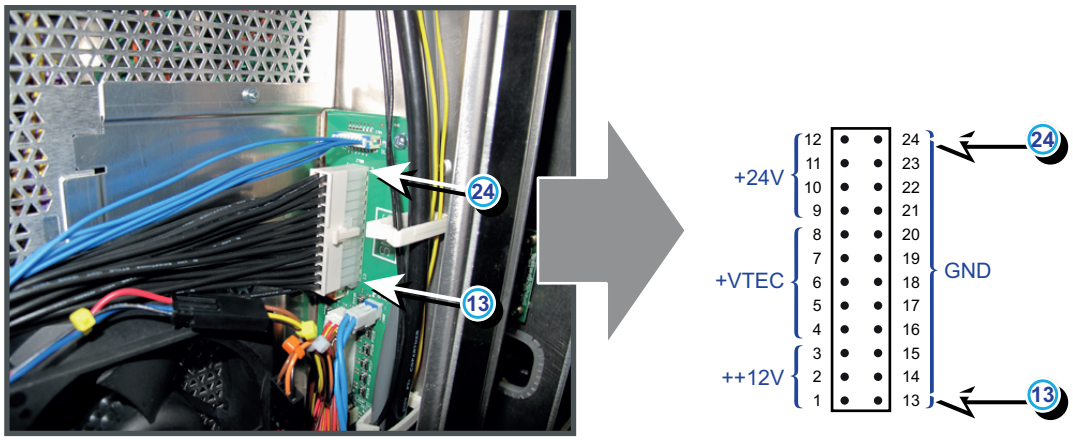


Image 18–117

## Code 6062: “+24v - voltage too low” (Error)

This error code is probably preceded by the warning code 6063: “+24v - voltage low”. The same troubleshooting table can be applied.

## Code 6063: “+24v - voltage low” (Warning)

| Situation | Solution |
|---|---|
| Malfunction Fan Control board or SMPS board. | Measure on the Signal Backplane the +24V voltage on pin 9, 10, 11 or 12 of the connector of the black wire unit which comes from the SMPS board. See Image 18–118.<br>If the measured voltage is about 24V then replace the Fan Control board. See “Replacement of a Card Cage board”, page 360. Otherwise replace the SMPS board. See “Replacement of the SMPS board”, page 368. |
| Short circuit or bad connection. | 1. Check the Signal Backplane for bad connections. Ensure that all wire units are well connected.<br>(Note that the +24V supply is generated on the SMPS board and enters the Fan Control board and Cinema Control board via the Signal Backplane)<br>2. Check the wiring (reference 1 Image 18–119) of the Anode fan (reference 2 Image 18–119) for short circuits.<br>3. Check the wiring (reference 3 Image 18–119) of the Cathode fan (reference 4 Image 18–119) for short circuits. |

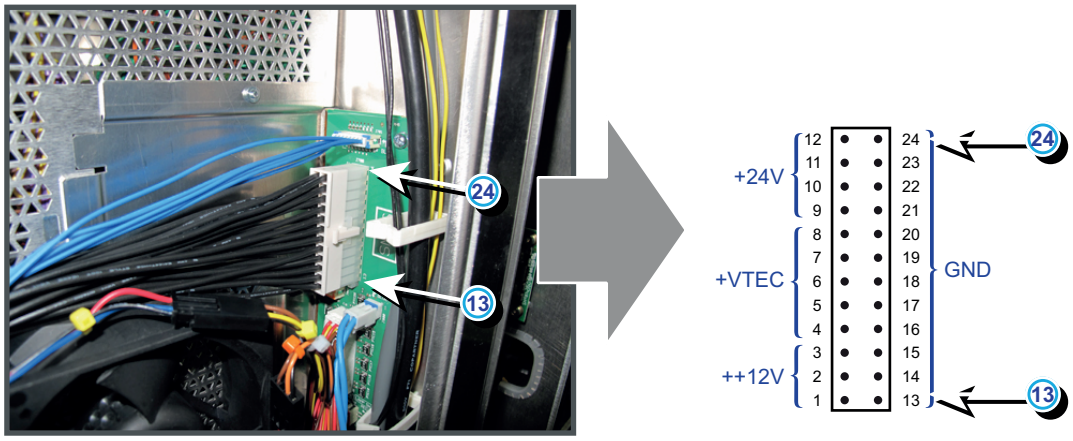


Image 18–118

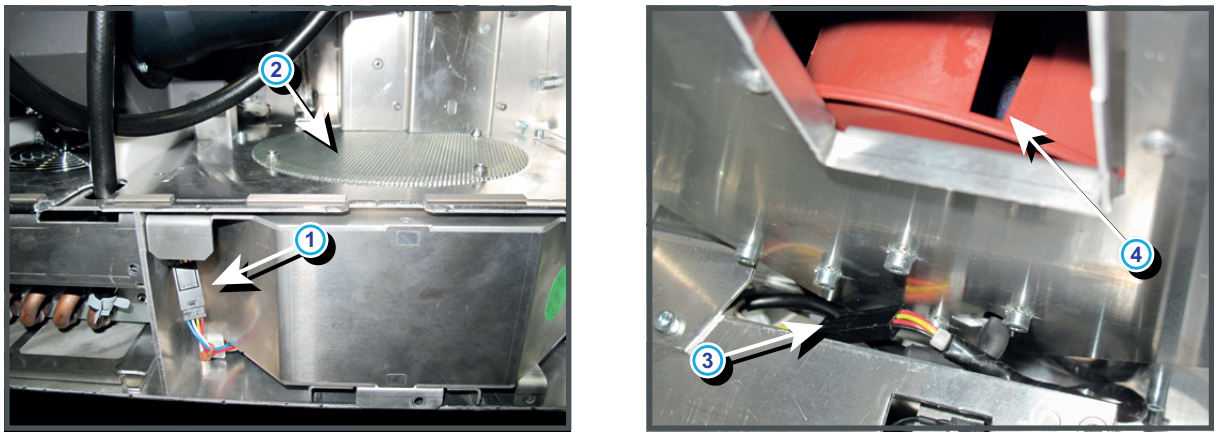


Image 18–119

## Code 6071: “++12v - voltage high” (Warning)

| Situation | Solution |
|---|---|
| Malfunction Fan Control board or SMPS board. | Measure on the Signal Backplane the ++12V voltage on pin 1, 2 or 3 of the connector of the black wire unit which comes from the SMPS board. See Image 18–120.<br>If the measured voltage is about 12V then replace the Fan Control board. See “Replacement of a Card Cage board”, page 360. Otherwise replace the SMPS board. See “Replacement of the SMPS board”, page 368. |

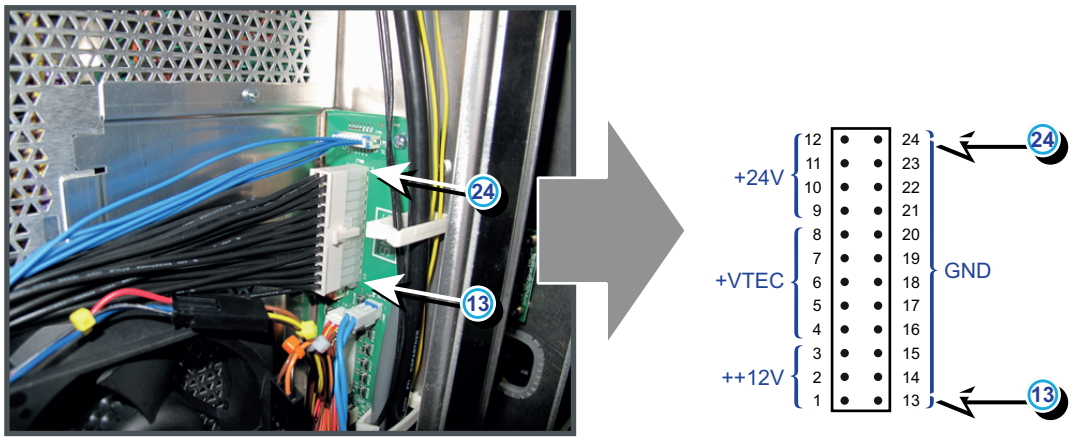


Image 18–120

## Code 6073: “++12v - voltage low” (Warning)

| Situation | Solution |
|---|---|
| Malfunction Fan Control board or SMPS board. | Measure on the Signal Backplane the ++12V voltage on pin 1, 2 or 3 of the connector of the black wire unit which comes from the SMPS board. See Image 18–121.<br>If the measured voltage is about 12V then replace the Fan Control board. See “Replacement of a Card Cage board”, page 360. Otherwise replace the SMPS board. See “Replacement of the SMPS board”, page 368. |
| Short circuit or bad connection. | Check the Signal Backplane for bad connections. |

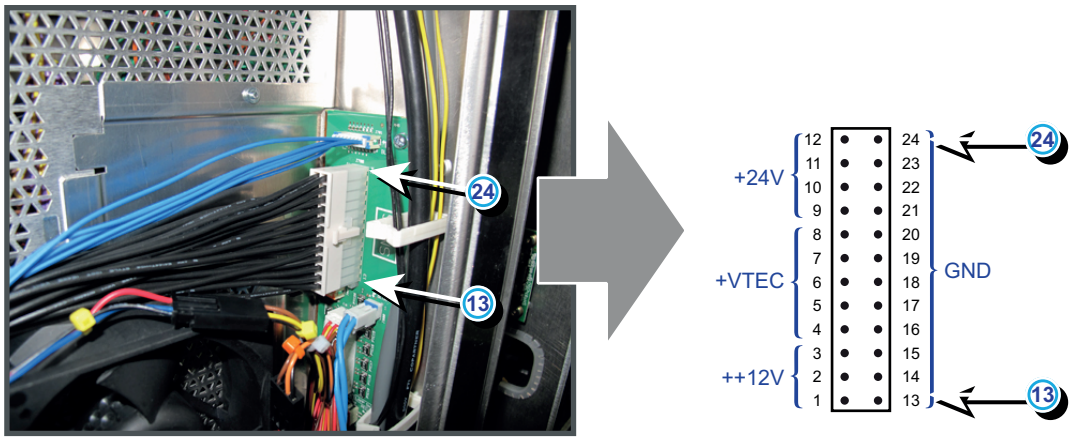


Image 18–121

## Code 6082: “lens motors - voltage too low” (Error)

| Situation | Solution |
|---|---|
| The supply voltage for the lens motors is below its minimum. | Measure on the Signal Backplane the +24V voltage on pin 9, 10, 11 or 12 of the connector of the wire unit which comes from the SMPS board. See Image 18–122.<br>(The supply voltage for the lens motors is derived form the +24V on the Cinema Controller board. The +24V supply is generated on the SMPS board and enters the Fan Control board and Cinema Control board via the Signal Backplane. )<br>If the measured voltage is **about 24V** then:<br>1. reseat the Cinema Controller board. See “Replacement of a Card Cage board”, page 360.<br>2. if the problem remains, replace the Cinema Controller board.<br>If the measured voltage is **not OK** then:<br>1. Check the Signal Backplane for bad connections or short circuits. Ensure that all wire units are well connected.<br>2. Check the wiring (reference 1 Image 18–119) of the Anode fan (reference 2 Image 18–119) for short circuits.<br>3. Check the wiring (reference 3 Image 18–119) of the Cathode fan (reference 4 Image 18–119) for short circuits.<br>4. replace the Fan Control board. See “Replacement of a Card Cage board”, page 360.<br>5. replace the SMPS board. See “Replacement of the SMPS board”, page 368. |

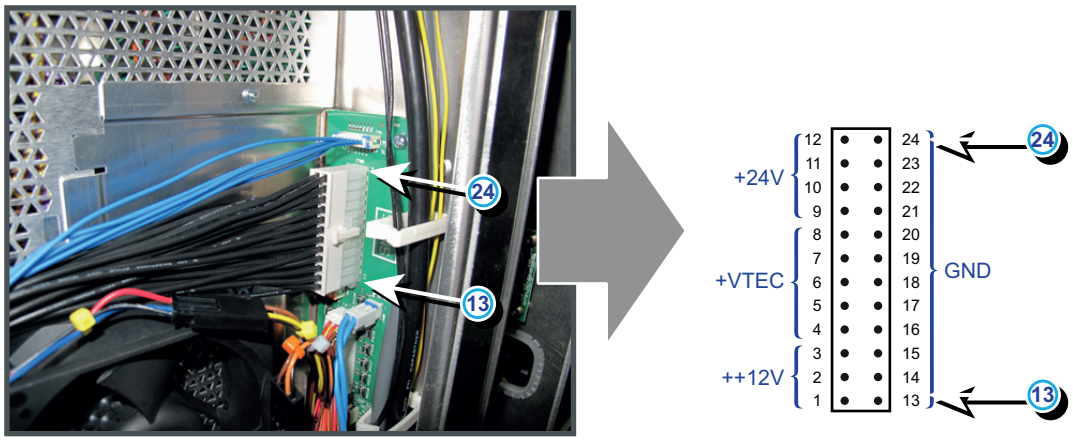


Image 18–122

## Code 6091: “air flow - no air flow” (Warning)

| Situation | Solution |
|---|---|
| Failure of the external air exhaust system. | Check the external air exhaust system. Note that the installed exhaust blower must remove an air volume of 10 m³/min or 350 CFM per installed DP-3000 projector. |
| Blocked air outlet. | Check if the air outlet on top of the projector is not blocked. |
| Blocked air inlet | 1. Check if the air inlet at the front and at the left side of the projector is not blocked.<br>2. Check both dust filters of the projector. Clean if necessary or replace if damaged. |
| Disconnected air flow switch. | Check the wire unit of the air flow switch (reference 1 Image 18–123) in the air outlet channel of the projector and check if the wire unit (reference 2 Image 18–124) is connected with the Signal Backplane. |
| Defect air flow switch. | Replace the air flow switch. |

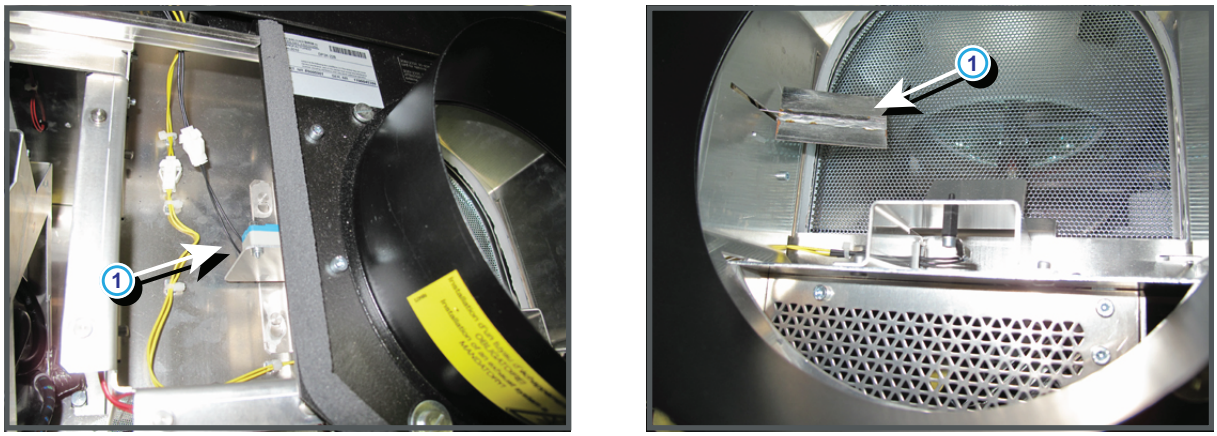


Image 18–123

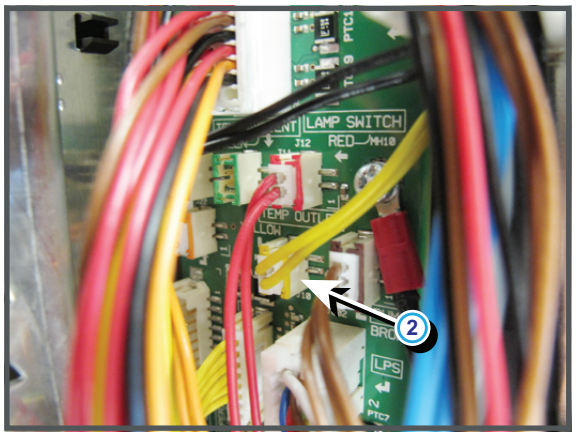


Image 18–124

## Code 6103: “heat exchanger fan 2 (back side) - speed low” (Warning)

| Situation | Solution |
|---|---|
| One of the two wire units (reference 1 Image 18–125) of the Heat Exchanger fans (reference 2 Image 18–125) is disconnected. | Pull out the Liquid Cooling assembly (reservoir, pump and heat exchanger) from the projector until you see the fan connections. Check if both fans are connected. Ensure the wire units are hidden between the fans and thus not obstruct the air flow of the fans. |
| Wire unit of the fan units (reference 5 Image 18–125) disconnected from the Signal Backplane. | Remove the front cover and front dust filter from the projector and check if the wire unit (reference 5 Image 18–125) is inserted in the Signal Backplane. |
| Blocked fan (reference 2 Image 18–125). | Unblock the fan. Ensure that the fan can turn freely. |
| Damaged wire unit. | Check if the wire unit of the fan is not damaged. Repair if possible, otherwise replace with new one. |
| Malfunction Fan Control board. | Replace the Fan Control board. See service manual chapter “Replacement of a Card Cage board”, page 360. |
| Fan end of life. | Replace the fan. See service manual chapter “Replacement of the Heat Exchanger fans”, page 429. |

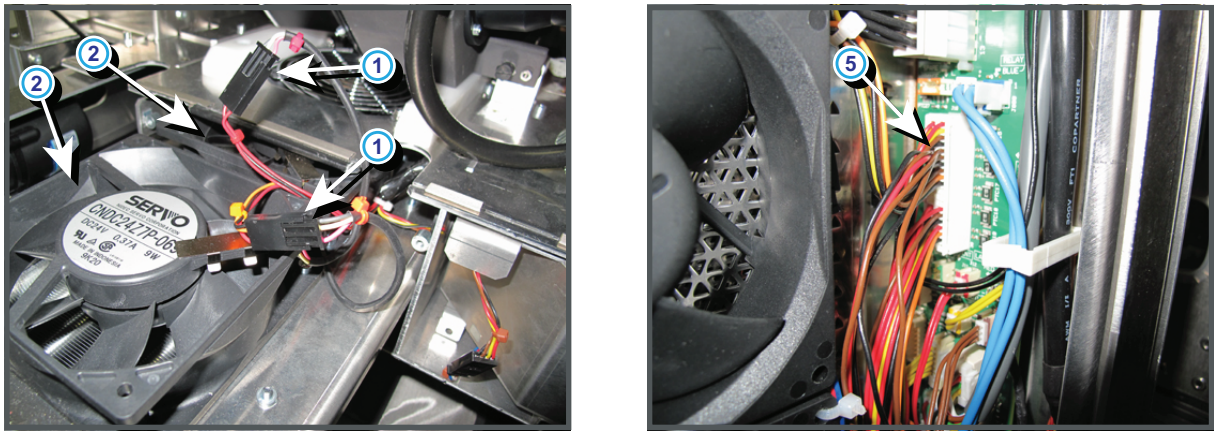


Image 18–125

## Code 6111: “heat exchanger fan 2 (back side) - voltage high” (warning)

| Situation | Solution |
|---|---|
| Malfunction Fan Control board or SMPS board. | Measure on the Signal Backplane the +24V voltage on pin 9, 10, 11 or 12 of the connector of the black wire unit which comes from the SMPS board. See Image 18–126.<br>If the measured voltage is about 24V then replace the Fan Control board. See “Replacement of a Card Cage board”, page 360. Otherwise replace the SMPS board. See “Replacement of the SMPS board”, page 368. |

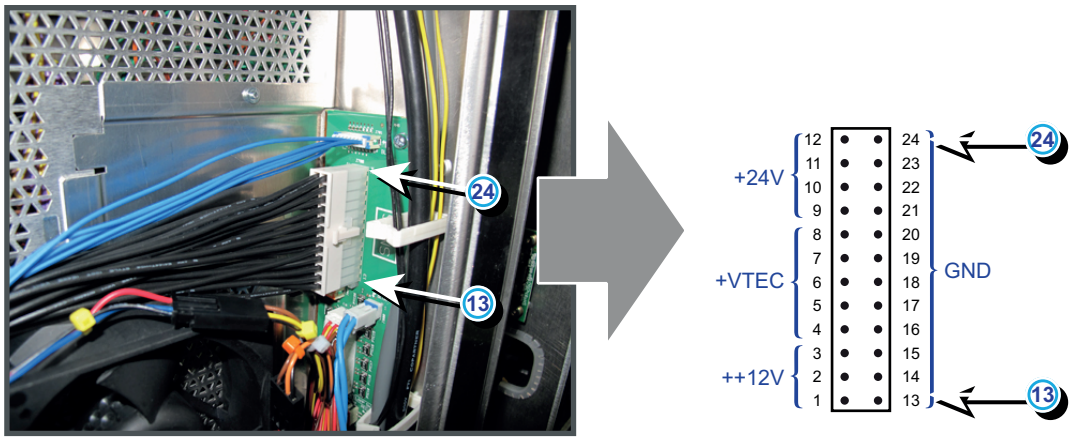


Image 18–126

## Code 6112: “heat exchanger fan 2 (back side) - voltage too low” (Error)

This error code is probably preceded by the warning code 6113: “heat exchanger fan - voltage low”. The same troubleshooting table can be applied to.

## Code 6113: “heat exchanger fan 2 (back side) - voltage low” (Warning)

| Situation | Solution |
|---|---|
| Malfunction Fan Control board or SMPS board. | Measure on the Signal Backplane the +24V voltage on pin 9, 10, 11 or 12 of the connector of the black wire unit which comes from the SMPS board. See Image 18–127.<br>If the measured voltage is about 24V then replace the Fan Control board. See “Replacement of a Card Cage board”, page 360. Otherwise replace the SMPS board. See “Replacement of the SMPS board”, page 368. |
| Short circuit or bad connection. | 1. Check the Signal Backplane for bad connections. Ensure that all wire units are well connected.<br>(Note that the +24V supply is generated on the SMPS board and enters the Fan Control board and Cinema Control board via the Signal Backplane)<br>2. Check the wiring (reference 1 Image 18–119) of the Anode fan (reference 2 Image 18–119) for short circuits.<br>3. Check the wiring (reference 3 Image 18–119) of the Cathode fan (reference 4 Image 18–119) for short circuits. |
| Damaged insulation of the wire units (reference 1 Image 18–128) of the fans (reference 2 Image 18–128) of the Heat Exchanger. | Remove the left cover of the projector and pull out the Heat Exchanger assembly. Check the insulation of the wire units of the fans in the assembly.<br>1. Repair the insulation of the wire unit using shrink sleeve.<br>2. If the wire unit of the fan is not repairable, replace the fan. See “Replacement of the Heat Exchanger fans”, page 429. |
| Malfunction Signal Backplane (bad connection) | Replace the Signal Backplane. |

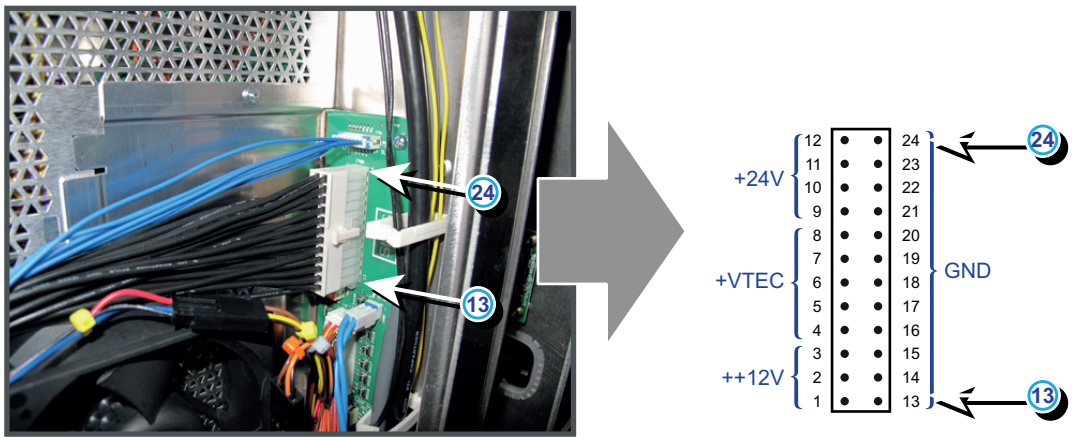


Image 18–127

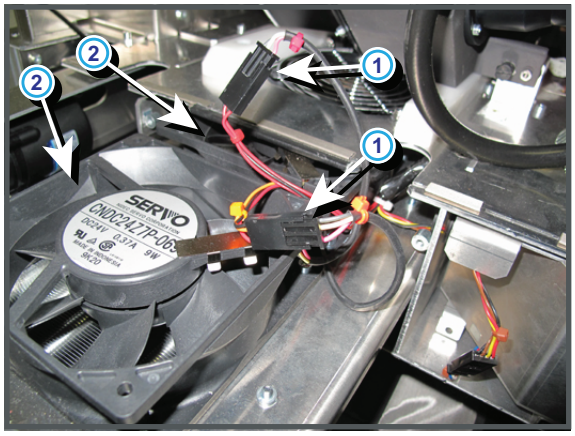


Image 18–128

## Code 6123: “icp fan - speed low” (Warning)

| Situation | Solution |
|---|---|
| Wire unit (reference 2 Image 18–129) disconnected from the Signal Backplane. | Remove the Card Cage cover from the projector and check if the wire unit (reference 2 Image 18–129) is inserted in the Signal Backplane. |
| Blocked fan (reference 1 Image 18–129). | Remove the Fan Control board and look inside the compartment to check if the fan is not blocked. Unblock the fan. Ensure that the fan can turn freely. |
| Damaged wire unit. | Remove the Fan Control board and look inside the compartment to check the wire unit of the ICP fan.. Repair if possible, otherwise replace with new one. |
| Malfunction Fan Control board. | Replace the Fan Control board. See service manual chapter “Replacement of a Card Cage board”, page 360. |
| Fan end of life. | Replace the fan. See service manual chapter “Replacement of the ICP fan”, page 440. |

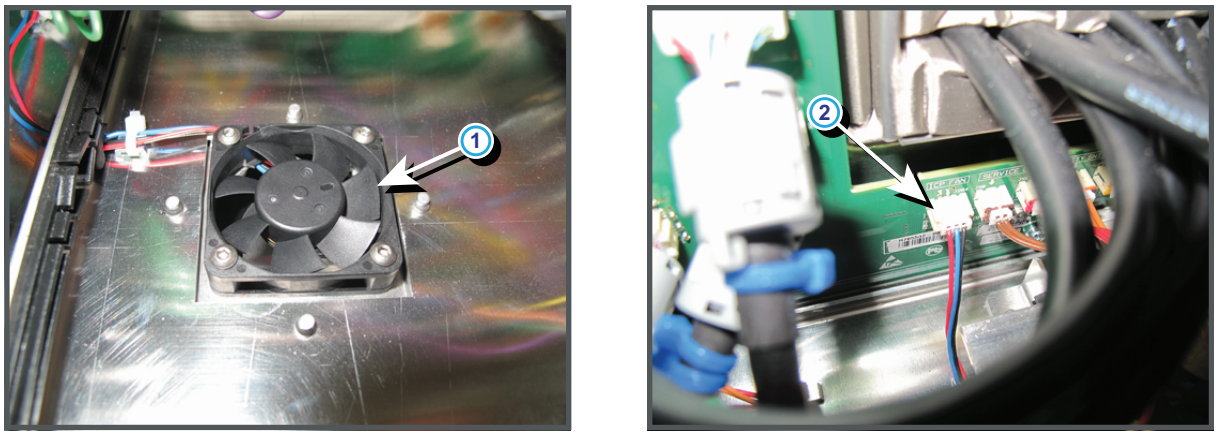


Image 18–129

## Code 6131: “icp fan - voltage high” (Warning)

| Situation | Solution |
|---|---|
| Malfunction Fan Control board or SMPS board. | Measure on the Signal Backplane the ++12V voltage on pin 1, 2 or 3 of the connector of the black wire unit which comes from the SMPS board. See Image 18–130.<br>If the measured voltage is about 12V then replace the Fan Control board. See “Replacement of a Card Cage board”, page 360. Otherwise replace the SMPS board. See “Replacement of the SMPS board”, page 368. |

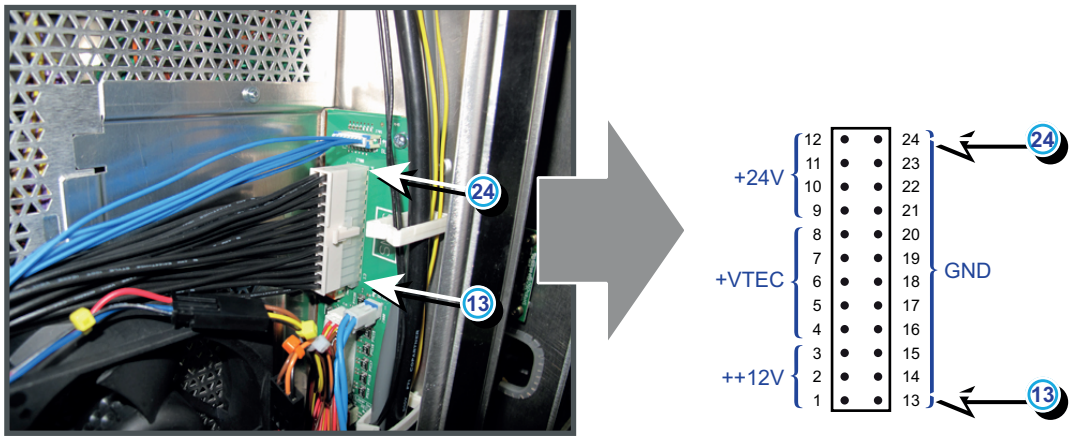


Image 18–130

## Code 6133: “icp fan - voltage low” (Warning)

| Situation | Solution |
|---|---|
| Malfunction Fan Control board or SMPS board. | Measure on the Signal Backplane the ++12V voltage on pin 1, 2 or 3 of the connector of the black wire unit which comes from the SMPS board. See Image 18–131.<br>If the measured voltage is about 12V then replace the Fan Control board. See “Replacement of a Card Cage board”, page 360. Otherwise replace the SMPS board. See “Replacement of the SMPS board”, page 368. |
| Short circuit or bad connection. | Check the Signal Backplane for bad connections. |
| Damaged insulation of the wire unit of the fan (reference 1 & 2 Image 18–132) Note that this fan is in the Card Cage compartment underneath the Fan Control board. | Check the insulation of the wire unit of the fan.<br>1. Repair the insulation of the wire unit using shrink sleeve.<br>2. If not repairable, replace the whole wire unit and/or fan. See “Replacement of the ICP fan”, page 440. |

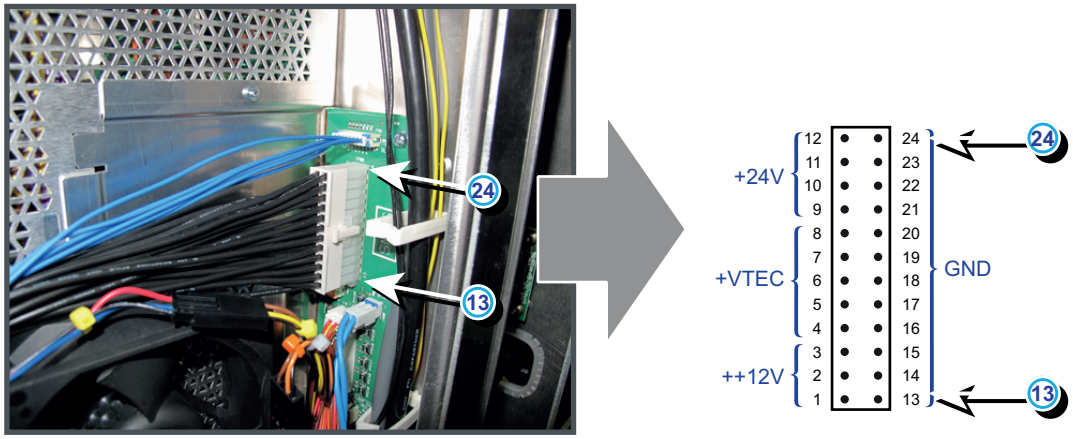


Image 18–131

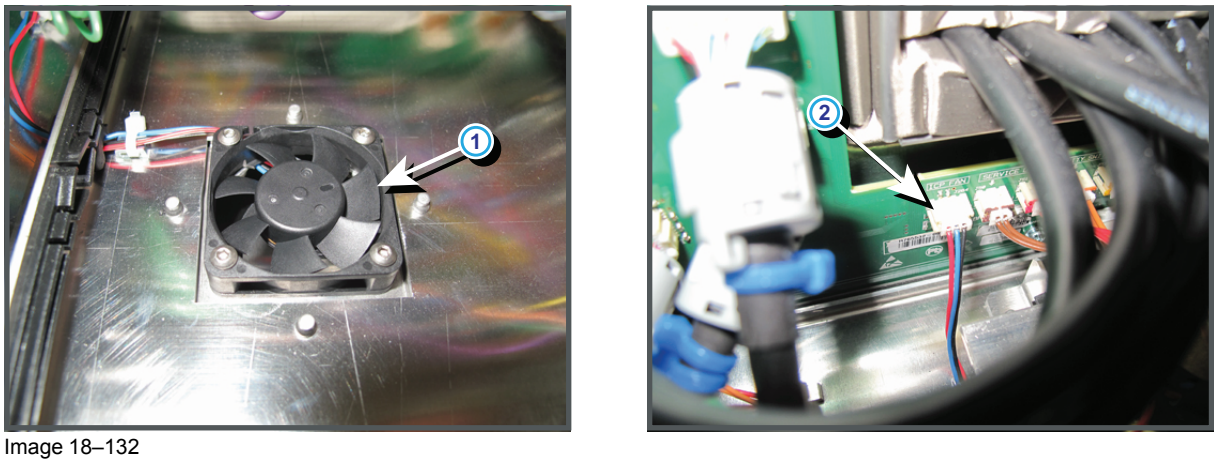


Image 18–132

## Code 6183: “spg fan - speed low” (Warning)

| Situation | Solution |
|---|---|
| Blocked fan (reference 4 Image 18–133). | Unblock the fan. Ensure that the fan can turn freely. |
| Damaged wire unit (reference 3 & 5Image 18–133) | Check if the wire unit of the fan is not damaged. Repair if possible, otherwise replace with new one. |
| Malfunction Fan Control board. | Replace the Fan Control board. See service manual chapter “Replacement of a Card Cage board”, page 360. |
| Fan end of life. | Replace the fan. See service manual chapter “Replacement of the SPG/ Cold Mirror fan”, page 430. |

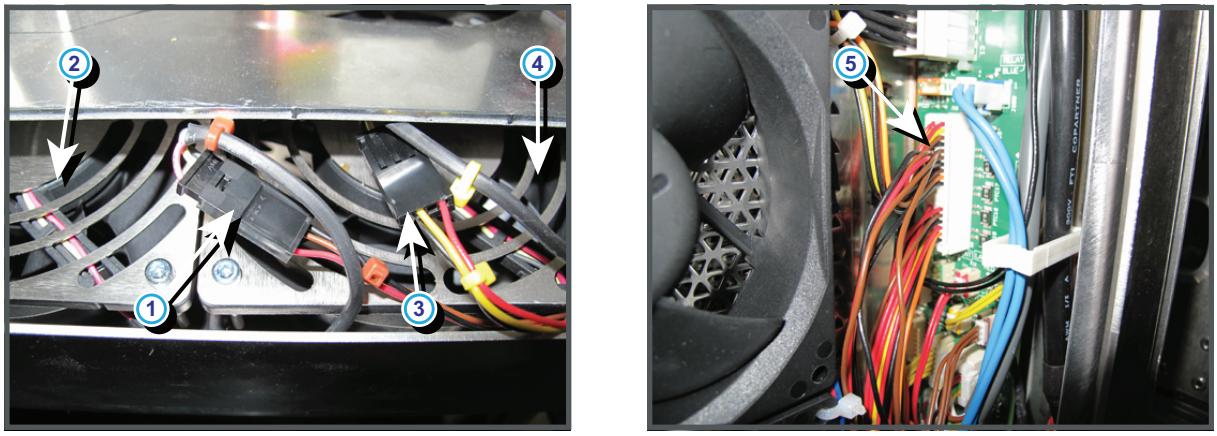


Image 18–133

## Code 6191: “spg fan - voltage high” (Warning)

| Situation | Solution |
|---|---|
| Malfunction Fan Control board or SMPS board. | Measure on the Signal Backplane the +24V voltage on pin 9, 10, 11 or 12 of the connector of the black wire unit which comes from the SMPS board. See Image 18–134.<br>If the measured voltage is about 24V then replace the Fan Control board. See “Replacement of a Card Cage board”, page 360. Otherwise replace the SMPS board. See “Replacement of the SMPS board”, page 368. |

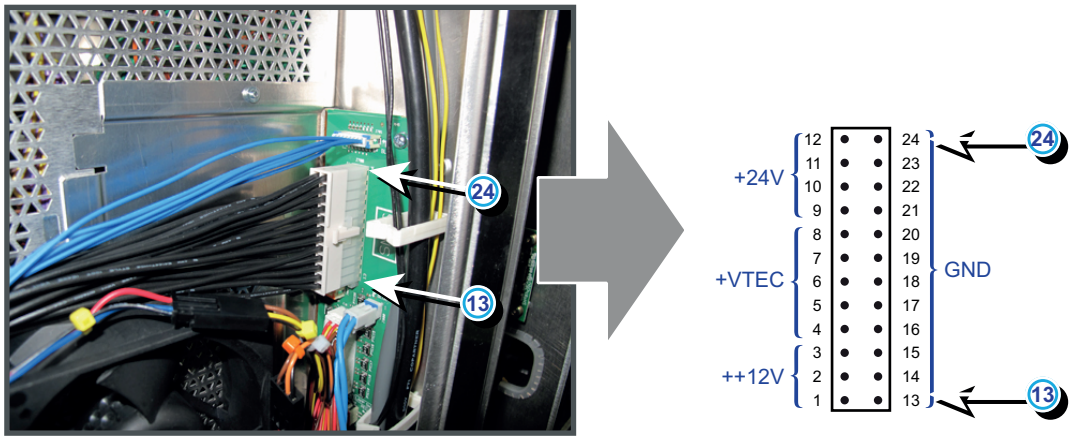


Image 18–134

## Code 6192: “spg fan - voltage too low” (Error)

This error code is probably preceded by the warning code 6193: “spg fan - voltage low”. The same troubleshooting table can be applied to.

## Code 6193: “spg fan - voltage low” (Warning)

| Situation | Solution |
|---|---|
| Malfunction Fan Control board or SMPS board. | Measure on the Signal Backplane the +24V voltage on pin 9, 10, 11 or 12 of the connector of the black wire unit which comes from the SMPS board. See Image 18–135.<br>If the measured voltage is about 24V then replace the Fan Control board. See “Replacement of a Card Cage board”, page 360. Otherwise replace the SMPS board. See “Replacement of the SMPS board”, page 368. |
| Short circuit or bad connection. | 1. Check the Signal Backplane for bad connections. Ensure that all wire units are well connected.<br>(Note that the +24V supply is generated on the SMPS board and enters the Fan Control board and Cinema Control board via the Signal Backplane)<br>2. Check the wiring (reference 1 Image 18–119) of the Anode fan (reference 2 Image 18–119) for short circuits.<br>3. Check the wiring (reference 3 Image 18–119) of the Cathode fan (reference 4 Image 18–119) for short circuits. |
| Damaged insulation of the yellow/red wire unit (reference 3 Image 18–136) of the SPG fan (reference 4 Image 18–136). | Remove the left cover of the projector and pull out the fan assembly below the Cold Mirror and SPG unit. Check the insulation of the wire unit of the right fan in the assembly.<br>1. Repair the insulation of the wire unit using shrink sleeve.<br>2. If the wire unit of the fan is not repairable, replace the SPG fan. See “Replacement of the SPG/Cold Mirror fan”, page 430 |
| Malfunction Signal Backplane (bad connection) | Replace the Signal Backplane. |

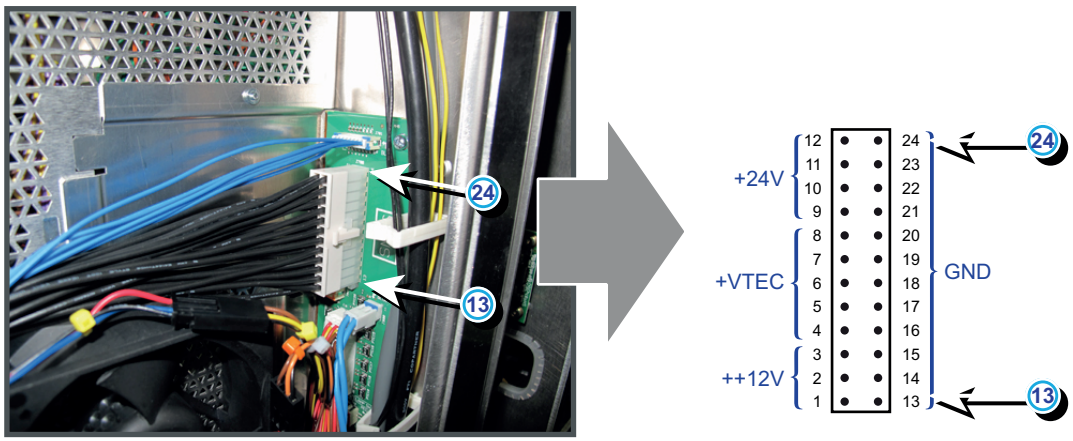


Image 18–135

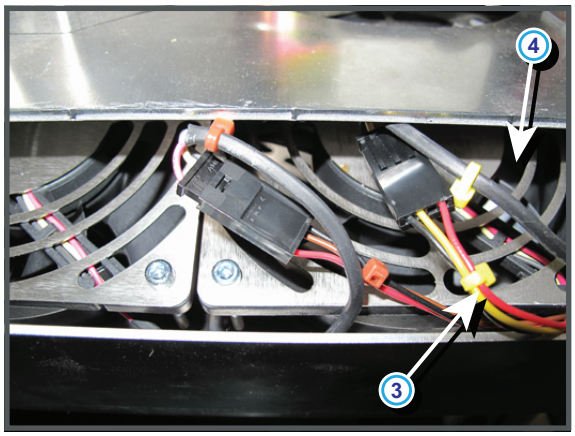


Image 18–136

## Code 6200: “maintenance - maintenance required” (Notification)

| Situation | Solution |
|---|---|
| Projector requires maintenance. | Go to the menu “Maintenance → Smart maintenance” in the Communicator software.<br>See also maintenance program of the projector (included in the service manual). |

## Code 6210: “lens - no lens parameter file has been activated” (Warning)

| Situation | Solution |
|---|---|
| No lens parameter file has been activated. | Select a suitable lens parameter file for the installed lens using the Communicator software.<br>>Installation >Advanced >Lens parameters >Select |

# 18.2 Log files

## Creating and downloading log files

A diagnostic package can be created with the Communicator software. Start up the software and go to *Diagnostics → Package*. A zip file will be created with the following information:

- ICP log file
- Security log file
- Projector log

These log files can be red with the Diagnostic package reader which was delivered as separate program together with the Communicator software. For more information about the use of this Diagnostic package reader, consult the User Guide of the Communicator software.

## ICP Log File

Records events listed below:

- Handshakes with server
- TI system initialization
- Reading of TI board status
- Opening of TCP connection
- Failure of TI boards

## Security Log File

Records events listed below:

- Monitoring of security switches
- Monitoring of key exchange
- Authorizing of Dallas key

## Projector Log

Records events listed below:

- Lamp control commands
- Booting of Barco software
- Detection of TI boards
- Log on details of users
- Detection of Barco modules (LPS, FCB, etc.)

## DP2K Log file analysis

Example of log file content

```
Dec 31 17:00:17 localhost local0.info license-manager[221]: main - starting ...
Dec 31 17:00:17 localhost local0.info router[224]: main - starting ...)
Dec 31 17:00:17 localhost local0.info router[231]: network - wan ip-address ...
Dec 31 17:00:18 localhost local0.info dp60[233]: main - starting application ...)
Dec 31 17:00:18 localhost local0.info dp60[233]: main - projector type is ...
Dec 31 17:00:21 localhost local0.info dp60[233]: ti-icp - wait until ready
Dec 31 17:00:34 localhost local0.info dp60[233]: system - synchronize date to ...
Apr 6 12:49:25 localhost local0.info dp60[233]: system - ti-link-decryptor ...
Apr 6 12:49:41 localhost local0.info dp60[233]: system - ti-link-decryptor ...
Apr 6 12:49:41 localhost local0.info dp60[233]: system - load lens encoder file ...
Apr 6 12:49:41 localhost local0.info dp60[233]: command (port = internal) - ...
...
```

**Format :**

‘Time’ localhost ‘facility code’.’severity code’ ‘component name’ [‘pid’]: ‘message’

Where :

- ‘Time’ = the time when the event occurred

- 'facility code' = component level that generates a log message
- 'severity code' = the severity can be : info – debug – warning – alert – err.
- 'component name' = component name that generates a log message.
  - dp60 = main process
  - kernel = Linux kernel
  - router = component which manages the router
  - TI_marriage = component which handles the marriage
  - clo = component which handles Light Sensor logic
  - license-manager = internal license manager
  - crypto memory = process which handles communication with crypto memory module (ID card)
- 'pid' = Process identifier. The internal process identifier, of the component generating the log message.
- 'message' = The actual error message.

The Barco controller inserts every hour an unique entry in the Barco log file and in the TI log file. This is done to be able to synchronize events in both log files, when the clocks are not aligned. It will also be used for a tool, that is still to be implemented, that will merge both log files, to make better analysis.

Example of such an entry :

```
Feb 3 02:41:16 localhost local0.info dp60[233]: log mark - 0000003c1b84 - 8
```

Each Barco entry into a TI log is proceeded with a B.

What does the id means (as in the example) :

- 0000003c
  - the first 4 bytes give a hex interpretation of how many time the system has been booted.
  - 3c hex is 60 in decimal. It means that this system has been booted 60 times. Every boot cycle increases the timer with 1.
- 1b84 = the last two bytes, are random unique 2 bytes.
- 8 = the last digit indicates the number of hours passed in this boot cycle (in a decimal value). Every boot cycle resets this number to 0.

**Ethernet connection messages in log file (some examples).**

```
Apr 6 14:05:19 localhost local0. info dp60 [233]: main - closing connection of
150.158.197.64:43680 (keep-alive time expired)
```

→ after 15 minutes of inactivity projector will close connection.

```
Apr 6 14:08:55 localhost local0. info dp60 [233]: main - accepted connection from
150.158.192.133:43680
```

→ connection from communicator, from pc with ip address 150.158.192.133

```
Apr 6 14:08:58 localhost local0.info dp60[233]: log (port = 150.158.192.133:43680:1e)
- logon-phmt-barco-default
```

→ communicator inserts in log file, who logged on to projector

```
Apr 6 14:09:07 localhost local0. info dp60 [233]: command (port =
150.158.192.133:43680:1e) - set lamp on
```

→ Command messages also indicate originator.

```
Apr 6 14:09:07 localhost local0.info dp60[233]: system - load fcb file "lamp-on"
```

→ on fan controller board, lamp-on state is set.

**External commands received by the Barco controller are preceded with the command (port = xxx) string**

Where xxx can be :

- /dev/ttyS0:0 = Command comes from the serial connection labeled (“RS232 IN"). That can be from a touch panel which is connected through a RS232 cable, or from a communicator which is connected serially.
- /dev/ttyS2:0 = Command comes from a touch panel attached with a dedicated cable to the back of the projector (touch panel input).
- /dev/ttyS3:0 = Command comes from the TI board. This is typically a command that is part of a macro stored on that board.

- `10.36.62.17:43680` = Command comes from a remote machine with indicated IP address, followed by the local of the remote machine that send this command internal. The command is initiated internally, due to an internal reason.
- `button` = button is triggered from the keypad, attached to the projector.

Some examples :

- `command (port = /dev/ttyS2:0) - set network ip-address to 10.140.162.141 (dhcp off)` = From the touch panel, the IP address of the projector was set to 10.140.162.141
- `command (port = 10.36.62.17:43680) - set network ip-address to 10.36.62.62 (dhcp off)` = From a device with IP address 10.36.63.17, the IP address of the projector was changed to 10.36.63.17
- `command (port = /dev/ttyS0:0) - set dowser open.` = From a touch panel or PC, connected serially (connector labeled "Touch panel"), the dowser was set to open.
- `command (port = /dev/ttyS0:0) - set lamp off` = From a touch panel or PC, connected serially (connector labeled "Touch panel"), the lamp was powered off.
- `command (port = internal) - set lamp off` = For an internal reason the state of the lamp was set to off.
- `command (port = button) - set dowser closed` = The dowser was closed from the keypad.

The error messages are explained in the troubleshooting list - code 5831

## ICP log files

Example of log file content :

```
2010/04/06 09:02:40.964797 I  ICP application 1.2(126) init □ Shows the ICP package
2010/04/06 09:02:40.980964 I  successfully initialized the LoginLevelProtection mutex
2010/04/06 09:02:41.039022 I  Autotiming initialized
2010/04/06 09:02:41.049829 I  Autotiming using VSyncs
2010/04/06 09:02:41.051245 I  Started Autotiming Port threads
2010/04/06 09:02:41.051755 I  Autotiming started
2010/04/06 09:02:41.052149 I  Port thread running
2010/04/06 09:02:41.052897 I  Port thread running
2010/04/06 09:02:43.632304 I  Started Autotiming Main thread
2010/04/06 09:02:43.633017 D  Autotiming thread running
2010/04/06 09:02:43.633476 D  Autotiming: blank the image
2010/04/06 09:02:43.792939 D  Autotiming: unblank the image
...
```

**Format**

`'Date Time' 'Severity' 'message'`

Where :

- `'Date Time'` = the time when the event occurred.
- `'Severity'` = One character severity indication can be : 'D" (Debug) – "E" (Error) – "I" (Informational) - "U" (User).
- `'message'` = The actual error message.

Example :

`24.03.2010 17:17:12.185 TPPL = 2848, APPL = 2048, TLPF = 4095, ALPF = 128`

This line is entered when the auto timing on the ICP computes values that are not within valid ranges.

Where :

- `TPPL` = Total Pixels Per Line
- `APPL` = Active Pixels Per Line
- `TLPF` = Total Lines Per Frame
- `ALPF` = Active Lines Per Frame
- 512 <= APPL <= TPPL <= 8191
- 288 <= ALPF <= TLPF <= 4095

In this example ALPF = 128 which is less than the minimum of 288. When this happens, auto timing will attempt to blank the image.

# Projector cleaning procedure

# A

A.1 Purpose ..... 554
A.2 Necessary tools, products and tips ..... 555
A.3 Optical path ..... 556
A.4 Non optical components ..... 564

# A.1 Purpose

## Purpose of projector cleaning

Projectors are not used in 100% ideal circumstances and due to that they might get contaminated by particles in the environment air. Due to this contamination the light output can be reduced or overheating may occur which may also lead to a projector shutdown during operation.

To keep the projector in a good shape, it is advised to clean the projector as suggested in the preventative maintenance section. Dust filter cleaning, cover cleaning and projection lens cleaning can be done by the operator of the projector. **The inside cleaning of the light path must be done by a trained and certified service engineer.**

# A.2 Necessary tools, products and tips

## Tools

Only the tools necessary to clean the projector are indicated here. Tools needed to disassemble or to get access are listed in the replacement procedures which are included in the projector's service manual.

- Any micro fiber lens cleaning cloth (e.g. Toraysee® cloth(s) (R379058))
- Vacuum cleaner
- Brush
- Clean cloth(s) (never use cloths that leave particles on the surfaces)

## Products

- Compressed air (spray)
- Lens cleaner (e.g. ZEISS lens cleaner, Purosol™ or other water based lens cleaner products)

## Tips

Ensure there is sufficient light in the cleaning environment. If necessary, add extra lights.

To protect the optical coatings, limit the number of wipe movements. It is better to wipe off the dust with one good wipe movement then with 10 soft wipe movements.

It is advised to use a lens cleaner in combination with a micro fiber lens cleaning cloth. A lens cleaner breaks the molecular bonds that dust, dirt and grime have to the surface, so that cleaning is much easier. A lens cleaner can also remove fingerprints without streaks.

Always use a clean cloth! If smears occur when cleaning optics, replace the cloth. Smears are the first indication of a dirty cloth.

Clean the light processor and light pipe in a dust free environment (best will be a clean room).

Make sure your booth environment corresponds with the environment specifications given in the projector's user and installation manual.

# A.3 Optical path

### Steps

1. Measure the light output of your projector before starting the cleaning procedure.
2. Optimize the Z-axis of the lamp for highest light output.
3. Clean the complete optical path.
4. Measure the light output again when the cleaning procedure is finished.

Write down all your results, remarks and time of measurement.

Measure always in the same environment conditions. Put your measuring device on a fixed position and always measure from this position.

Do these measurements every time you perform an optical cleaning. Overtime you will have an overview and you will be able to compare with previous measurements.

Consult the projector's service manual to see how to remove any optical part.

Before starting with the cleaning of the optical parts, first clean the outside covers of the projector.



We advise to measure the light output in every step, such as Z-axis alignment, cleaning the complete lamp house, the cold mirror, the notch filter, rod inlet and prism outlet, projection lens and port hole window. At least, make sure to measure the light output before you start and at the end of the complete cleaning procedure.

### General cleaning procedure for optical parts

1. Blow off dust with **clean** compressed air (or pressurized air cans[5]).
2. Clean with lens cleaner liquid together with a clean lens cleaning cloth to remove the dust and contamination. Use big wipes.
3. Use a dry lens cleaning cloth to remove left liquid or stripes. Polish with small circles.
4. If there are still fingerprints on the surface, wipe them off with lens cleaner together with a clean lens cleaning cloth. Polish again with a dry one.

If there is a difference in cleaning a specific part, it is mentioned in the description of that specific part.

## A.3.1 Cleaning order

### Overview

1. Outside lamp house
2. Reflector cleaning
3. UV blocker
4. Lamp house compartment
5. Cold mirror
6. Rod inlet
7. 3D color wheel (optional)
8. Notch filter
9. Prism outlet
10. Light processor compartment
11. Lens cleaning
12. Port hole

5. Pressurized air cans is not efficient if there is too much dust on the surface, the pressure is too low

## A.3.2 Cleaning procedure

### Outside lamp house

Start with the outside of the lamp house to avoid that dust will be dropped inside the lamp house

1. Take the lamp house out of the projector. See “Removal of the Lamp House”, page 78.
2. Remove contamination with a vacuum cleaner and a brush.

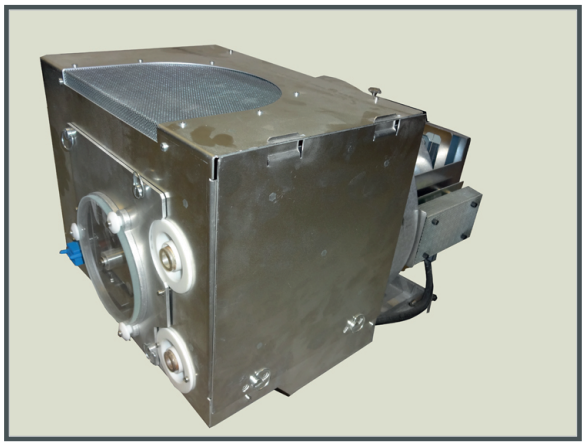

Image A–1

### Reflector cleaning

1. Remove the lamp from the lamp house. See “Removal of the xenon lamp from Lamp House”, page 79 or “Removal of the xenon lamp from manual S/M Lamp House”, page 84 depending on your projector type.
2. Follow the general cleaning procedure for optical parts, see page 556.

   To obtain the best result, it is best to use immediately a lens cleaner.



Image A–2

*Note:* **Polishing the reflector is very important. It improves the light output significantly.**

or

see “Cleaning the Reflector of the Lamp House”, page 150.

**CAUTION:** When reflector is cracked or damaged, replace with a new one.

### UV blocker

1. Blow the excessive dust off with compressed air. Do this on both side.

2. Follow the general cleaning procedure for optical parts to clean both sides, see page 556.

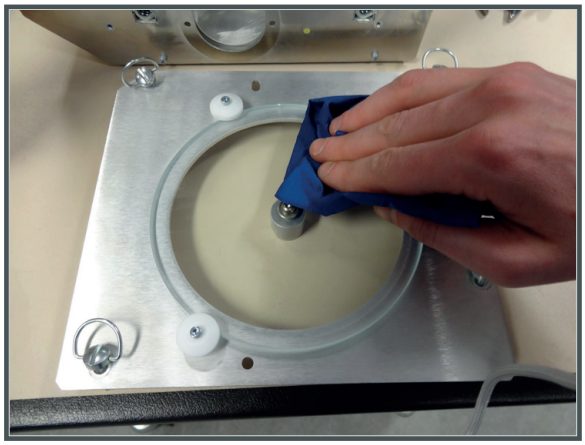

Image A–3

or

see “Cleaning the UV blocker of the Lamp House”, page 149

3. Reassemble the lamp house. See “Installation of the xenon lamp in motorized XL Lamp House”, page 108 or “Removal of the xenon lamp from motorized S/M Lamp House”, page 104.

**CAUTION:** When the UV blocker is cracked or damaged, replace with a new one.

## Lamp house compartment

1. Remove all dust with a vacuum cleaner and a brush.

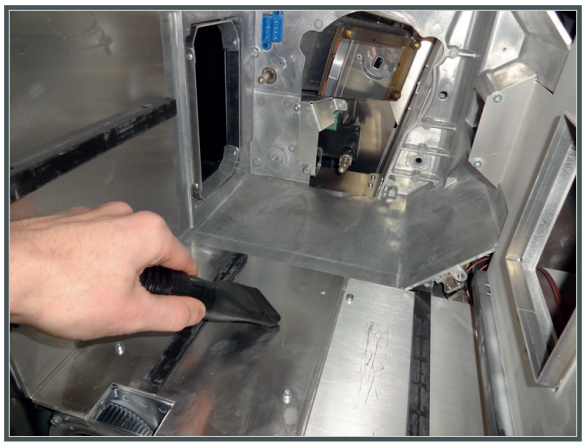

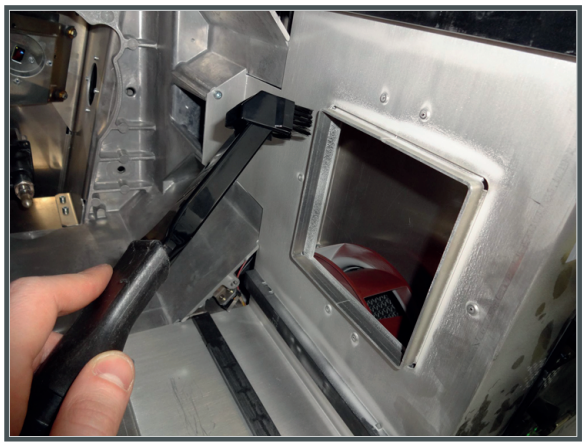

Image A–4

## Cold mirror

1. Follow the general cleaning procedure for optical parts, see page 556.

*Note:* Do not push too hard to avoid a crack.

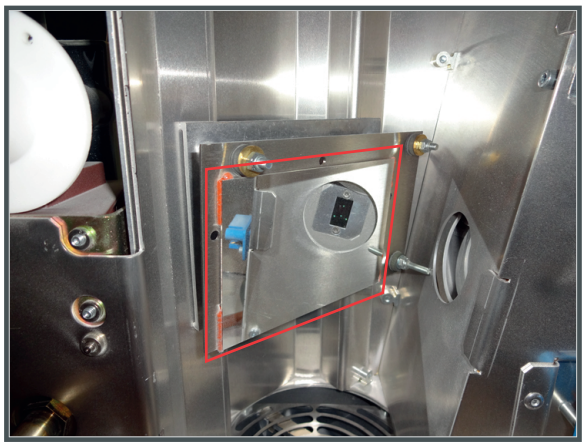

Image A–5

or

see “Cleaning the Cold Mirror”, page 209.

## Rod inlet

1. Consult the projector's service manual to remove the Light processor assembly out of the projector. See “Light processor assembly removal”, page 236 to find the necessary procedures.
2. Follow the general cleaning procedure for optical parts, see page 556.

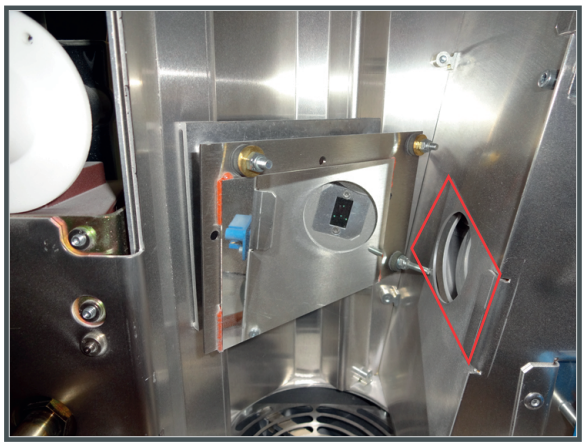

Image A–6 Cleaning without building out the light processor

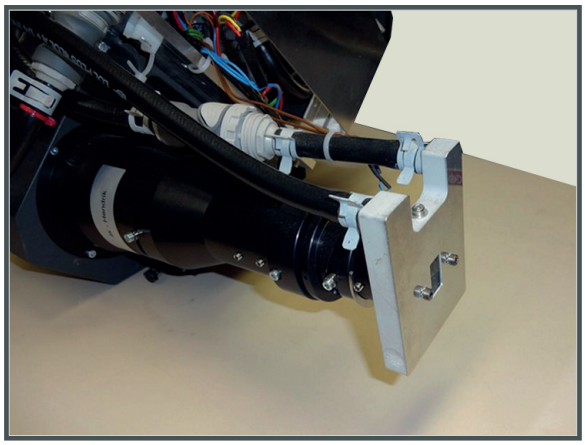



Image A–7 Cleaning with a build out light processor

## 3D color wheel (optional)

1. Follow the general cleaning procedure for optical parts, see page 556.

2. While the projector is running, run a 3D macro so that the color wheel is down and then switch off the projector

   or

   Bring the 3D color wheel down by turning the axis of the stepper motor with a flat screw driver. (reference 2)

   Turn the color wheel a little so that it is possible to clean other areas (reference 1).

   Clean the 3D color wheel itself.

   *Note:* Be careful not to push to hard on the color wheel as this is a very thin glass.

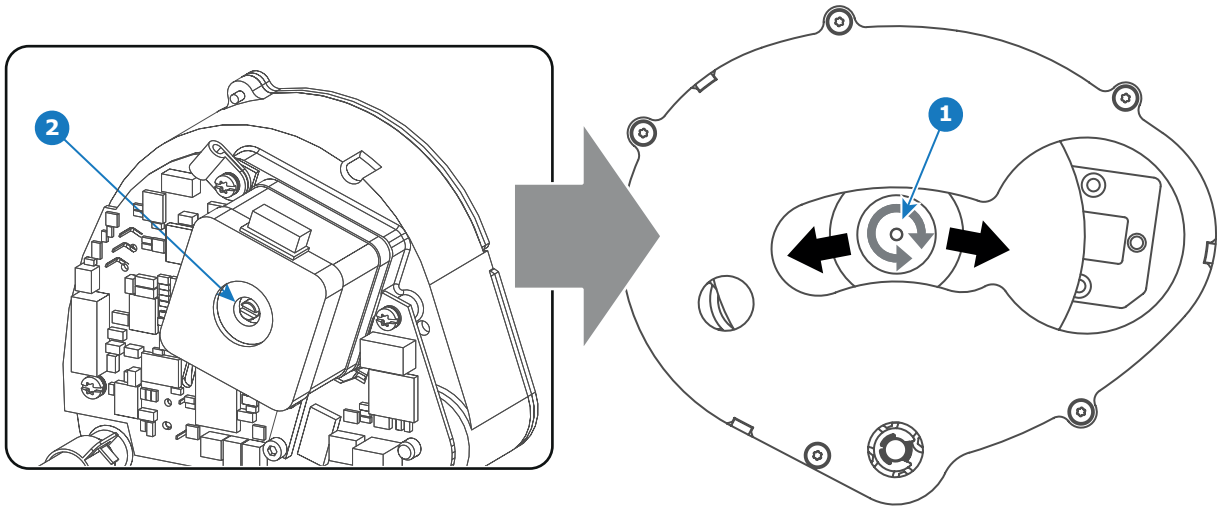


Image A–8

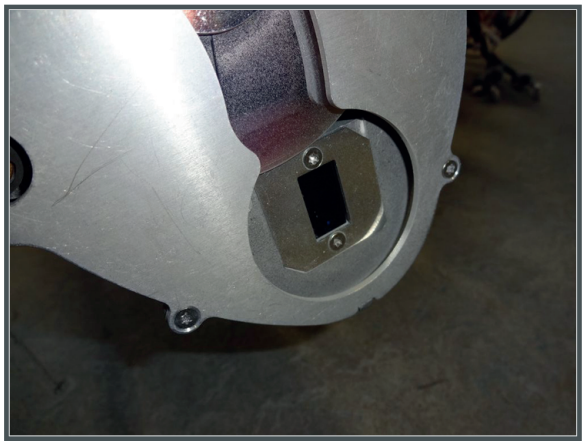

Image A–9

## Notch filter

1. To access the notch filter, see “Replacement of the Notch Filter (First generation Light Pipe)”, page 269

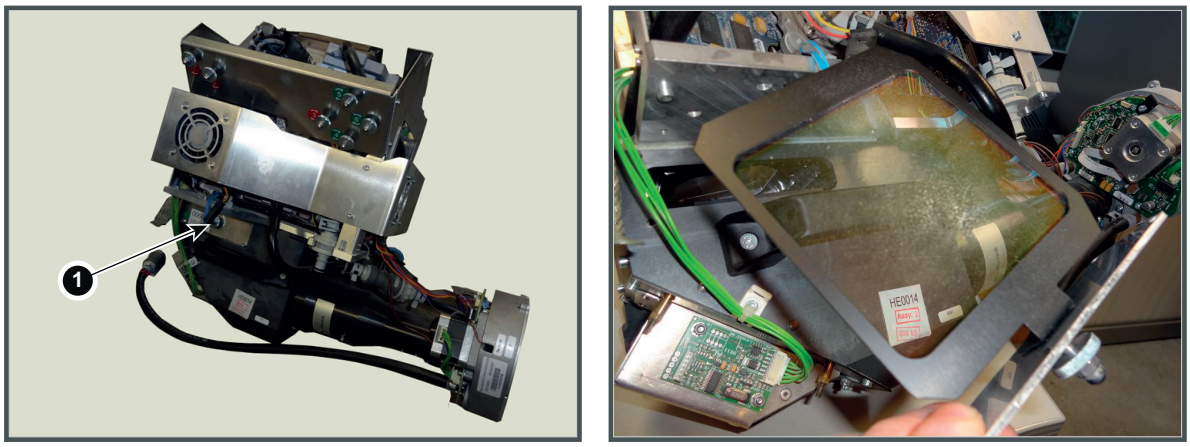


Image A–10

2. Follow the general cleaning procedure for optical parts, see page 556.

   *Note:* Do not push too hard to avoid a crack.

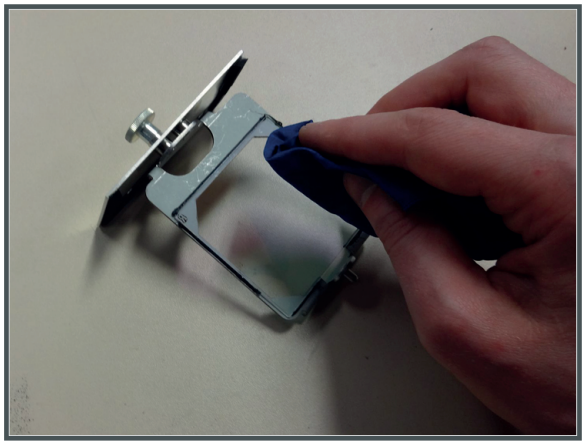

Image A–11

or

see “Cleaning the Notch Filter”, page 265.

3. Reinsert the notch filter.

   *Note:* Realignment of the notch filter is necessary.

## Prism outlet

1. Follow the general cleaning procedure for optical parts, see page 556.

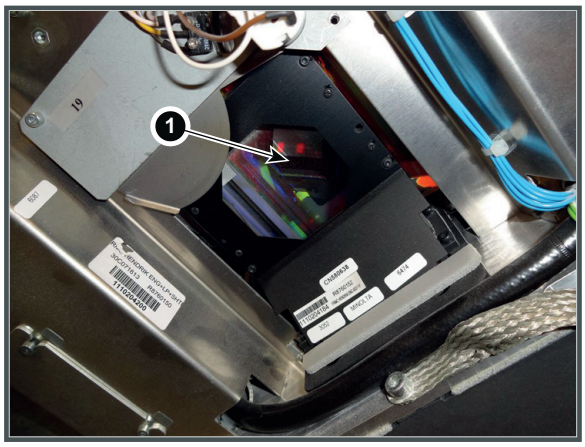


Image A–12

or

see “Cleaning the Prism exit side”, page 266.

## Light processor compartment

1. Remove dust with a vacuum cleaner and brush.

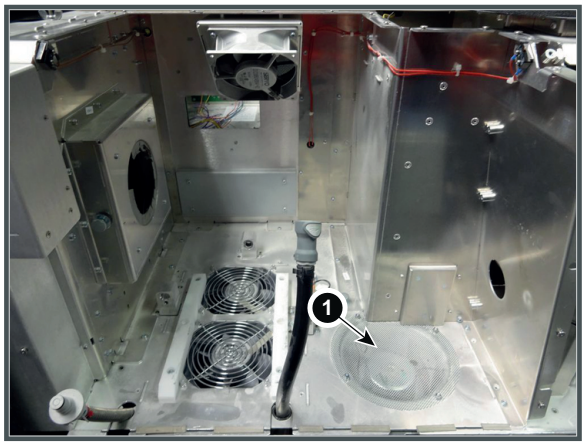


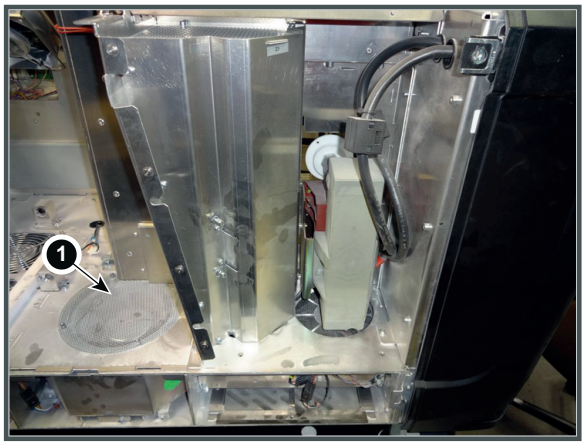


Image A–13

2. Clean the air inlet of the anode fan (1) and clean the complete compartment.
3. Remove the light sensor module as given in “Replacement of the Light Sensor Module (First generation Light Pipe)”, page 267 or “Replacement of the Light Sensor Module (Second generation Light Pipe)”, page 268.

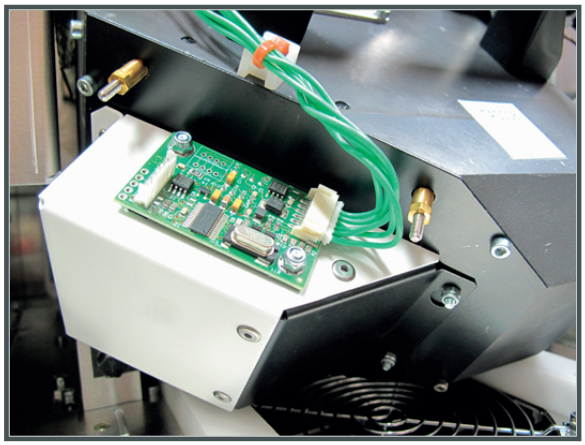

Image A–14

4. Clean the module on both sides.

5. Reinstall the light sensor module. Follow the second part of the replacement procedure.
6. Mount the light processor assembly in its compartment and insert the lamp house.

## Lens cleaning

1. Follow the procedure as given in “Cleaning the lens”, page 328.

## Port hole window

1. Clean the window of the port hole on both sides. Use a lens cleaner to clean Commercial window cleaners can destroy the anti-reflective coating of the window glass.

# A.4 Non optical components

## A.4.1 Card cage

### Air intake side

1. Remove the front dust filter. How to remove can be found in procedure “Remove and clean the front dust filter”, page 574.

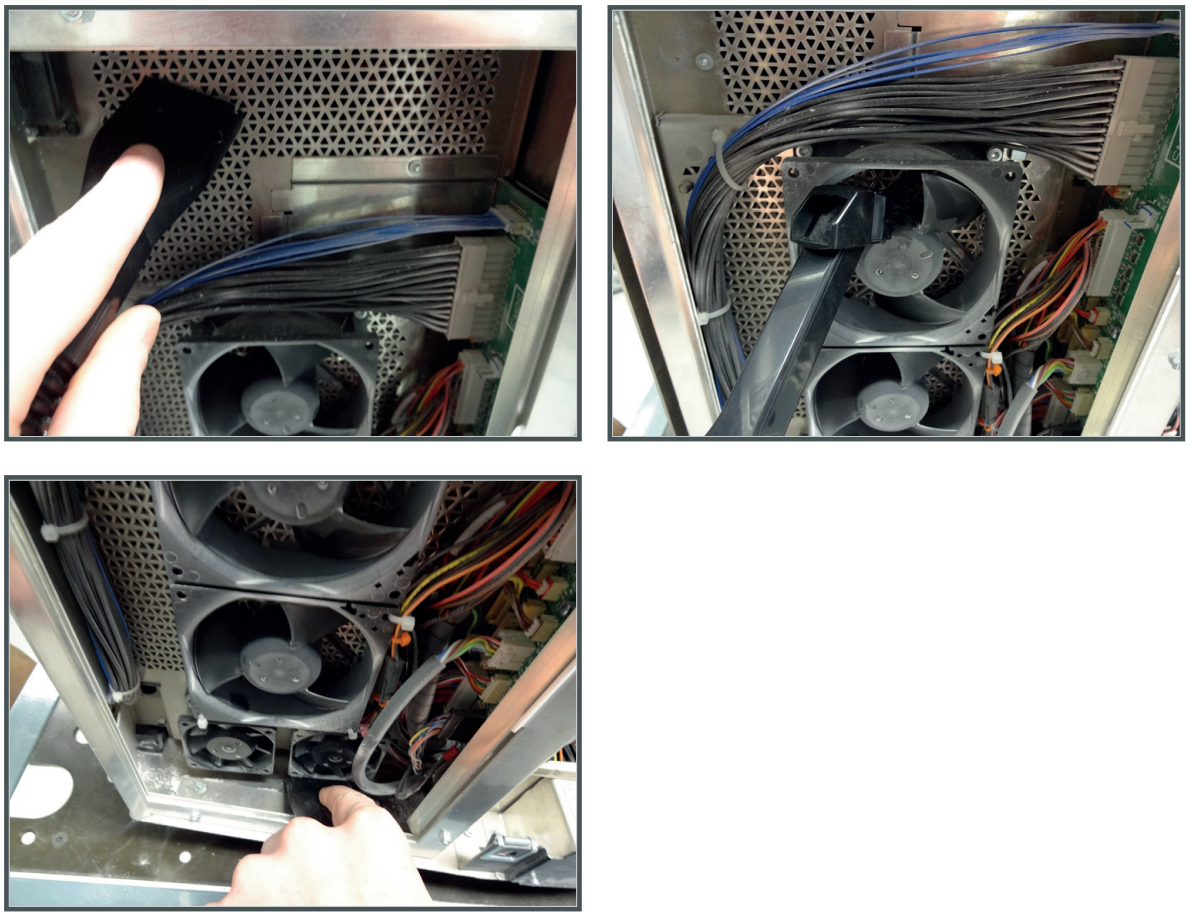

Image A–15

2. Clean the metal mesh grid of the card cage fans and the fans itself with a vacuum cleaner and brush.

   *Warning:* Do not blow with compressed air to avoid dust distribution inside the card cage.

### Input & Communication unit

1. Loosen the two screws (reference 1) of the Card Cage top cover. Use a 3mm Allen wrench
2. Remove the Card Cage top cover. Take into account that the top cover is captured by four self clinching tie mounts (reference 2) .

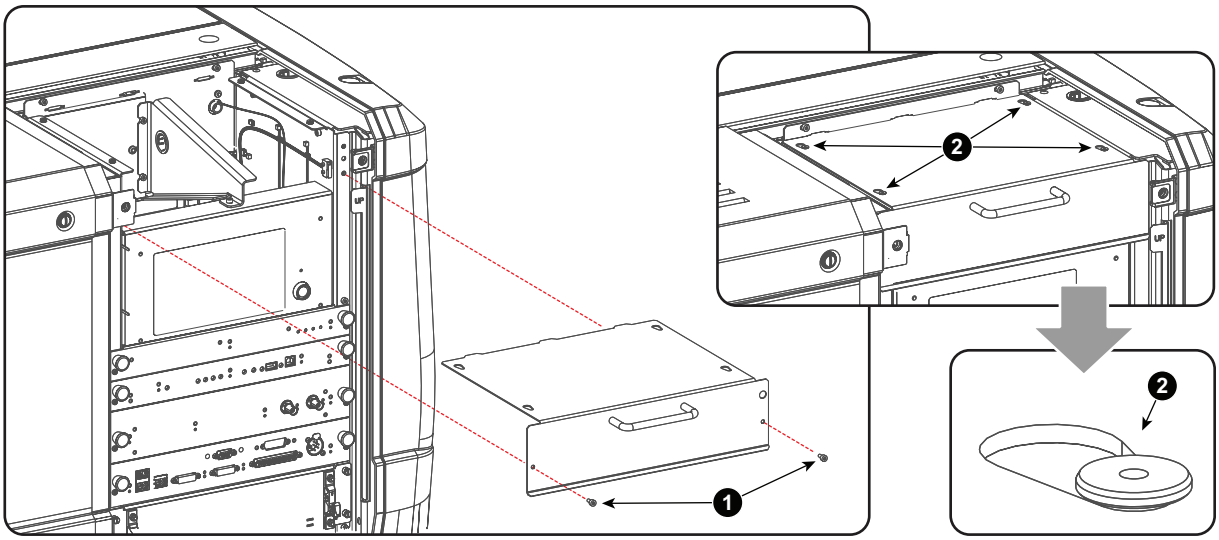


Image A–16

3. Remove inside the unit dust and contamination with a vacuum cleaner and brush.

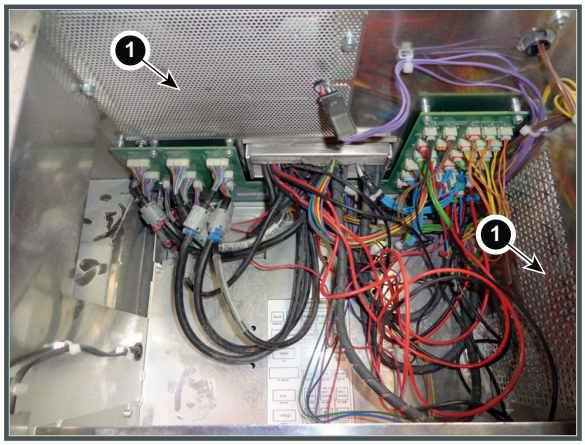


Image A–17

4. Clean the mesh grids of the Input & Communication unit compartment towards the light processor unit and the front filter (1).

## Board compartment

1. Remove all the boards out of the card cage. See “Replacement of a Card Cage board”, page 360.

   *Caution:* Wear a wrist band which is connected to the ground while handling the electrostatic discharge sensitive parts.

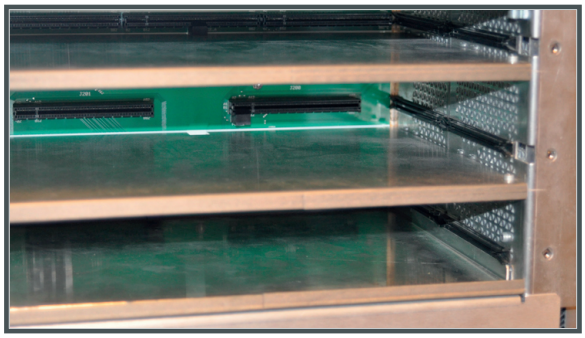

Image A–18

2. Remove dust with compressed air. Be careful not to damage any component.
3. Clean the air inlet

## A.4.2 SPG fan assembly

### How to remove and clean

1. Disconnect the wire units of the SPG and Cold mirror fan.

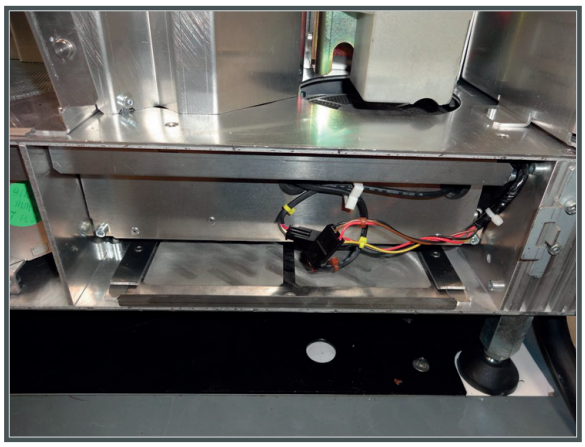



Image A–19

2. Loosen both screws and remove the fan assembly.
3. Remove dust on the fan assembly (the metal mesh grid) with a vacuum cleaner and brush.
4. Blow off the remaining dust with compressed air.
5. Reinstall the assembly and connect the wire units with respect of the colors.

## A.4.3 Pump assembly

### Preparations

To remove the pump assembly and liquid cooling circuit from the projector, see “Removal of the Liquid Cooling assembly”, page 291.

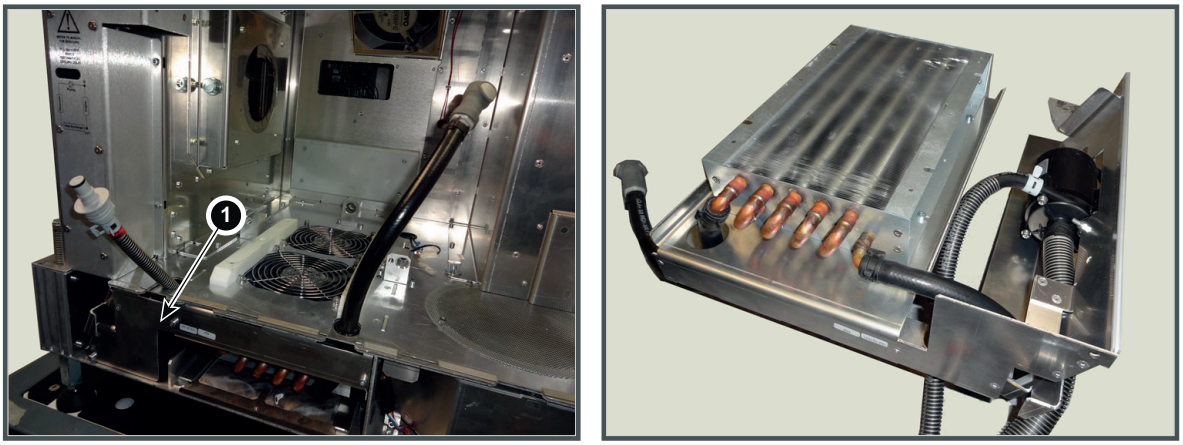


Image A–20

### How to clean

1. Remove dust on the liquid cooling assembly with a vacuum cleaner and brush.
2. Blow off the remaining dust with compressed air.
3. Insert the Liquid Cooling Assembly as described in “Installation of the Liquid Cooling assembly”, page 294.

## A.4.4 Power connection and Lamp power supply

### Preparations

To get access to the power connection and to remove the lamp power supply, consult “Access to the power connection”, page 44 and “Removal of an LPS module”, page 56.

### How to clean

1. Remove dust on the mesh grid and inside the connection cabinet with a vacuum cleaner and brush (1).

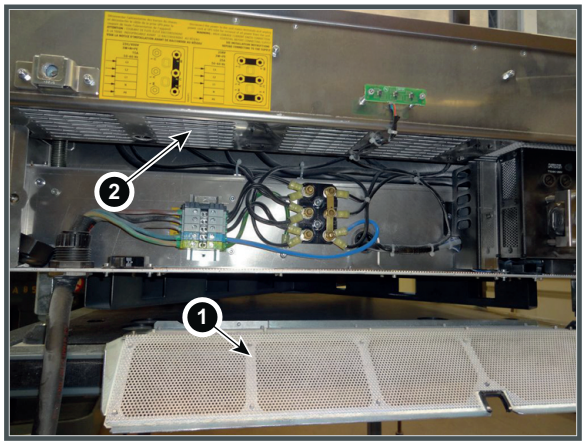


Image A–21

2. Also clean the mesh grid to the fans of the LPS unit (2).
3. Blow off the remaining dust with compressed air.
4. Close the power connection grid.
5. Remove the LPS units and clean with a vacuum cleaner and brush.
6. Insert the Lamp power supply as described in “Installing an LPS module”, page 58.

## A.4.5 External covers

### How to clean

1. Switch off the projector and unplug the projector from the mains power net.
2. Clean the housing of the projector with a damp cloth. Stubborn stains may be removed with a cloth lightly dampened with a mild detergent solution.

## A.4.6 Dust filters

### How to clean

For a complete explanation on how to clean the dust filters, see chapter “Dust filter maintenance”, page 573.

### To clean sticky, greasy metal mesh filters

In some conditions the metal mesh filters on the projectors are sticky and are getting clogged by dust and grease. Because of the grease the cleaning methods with a vacuum cleaner or compressed air is no longer sufficient.

To clean sticky, greasy metal mesh filters we suggest usage of **Sodium carbonate** crystals. Sodium carbonate (Often called **washing soda**, **soda crystals**, or **sal soda** in the detergent section of stores) is widely used to effectively remove oil, grease, alcohol stains … The product itself is relatively safe, sodium carbonate is used in toothpastes and as a food additive (E500). Potential Hazards are described below.

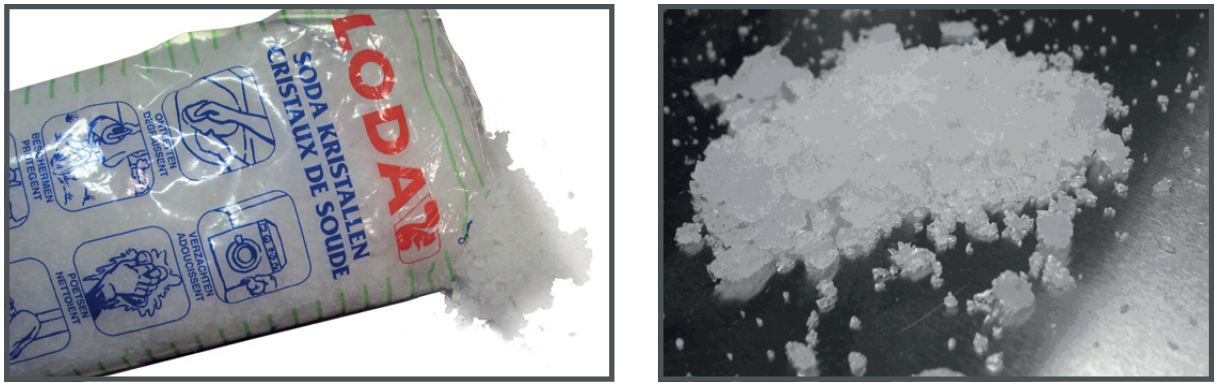


Image A–22 Sodium carbonate crystals.

### How to clean metal mesh filters?

1. Make a solution with a ratio of 30 gram (a handful) sodium carbonate to 1 liter **hot** water.
2. Soak the metal mesh filters in the solution for 30 to 60 minutes. The grease should be dissolved after 1 hour.
3. If there is still grease present after that 1 hour remove it by gently wiping off the grease from the metal mesh filter. Use a soft brush or cloth.

   *Caution:* Do not damage the metal mesh filter while wiping off the grease!
4. If the metal mesh filter is still clogged repeat this procedure from step 1.
5. Rinse the metal mesh filter with clean water to flush all grease residue away.
6. Dry the metal mesh filter with compressed air. Ensure that the metal mesh filter is clean and dry.

**CAUTION:** Do not install/use damaged metal mesh filters. Replace damaged metal mesh filters immediately with new metal mesh filters of the same type. See *https://my.barco.com* for replacement parts.

## Cleaning illustration

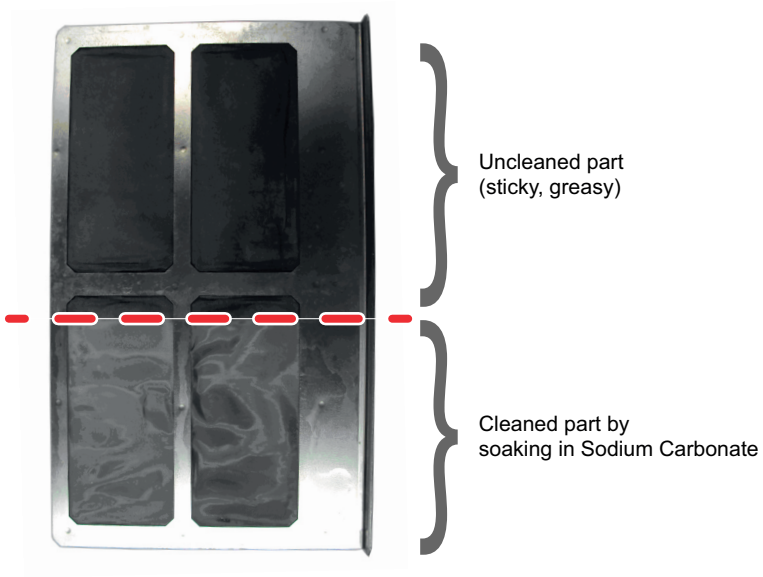


Image A–23

## Hazards, Safety notice

According to the Material Safety Data Sheet (MSDS), Sodium Carbonate could cause the following hazards:

- Potential Acute Health Effects: Hazardous in case of skin contact (irritant), of eye contact (irritant), of ingestion, of inhalation (lung irritant).
- Potential Chronic Health Effects: Slightly hazardous in case of skin contact (sensitizer). The substance may be toxic to upper respiratory tract, skin, eyes. Repeated or prolonged exposure to the substance can produce target organ damage.

More info about the product can be found on website of “unep” or the link below:

*http://www.chem.unep.ch/irptc/sids/oecdsids/Naco.pdf*

# Dust filter maintenance

# B

B.1 Remove and clean the front dust filter ..... 574
B.2 Remove and clean both bottom dust filters ..... 576
B.3 Cleaning the exterior of the projector ..... 577

## About this chapter

This chapter describes how to remove and how to clean the dust filters of the projector.

The air filters should be cleaned **monthly** under normal environment conditions. Equipment in very dusty or otherwise contaminated areas may require more frequent maintenance.

If the air filters are not regularly cleaned, the air flow inside the projector could be disrupted and cause overheating. Overheating may lead to the projector shutting down during operation.

# B.1 Remove and clean the front dust filter

**WARNING:** Take care: the metal filters of the projector are fragile. Clean with care!

## How to remove

1. Remove the input cover.
2. Slide out the filter frame.

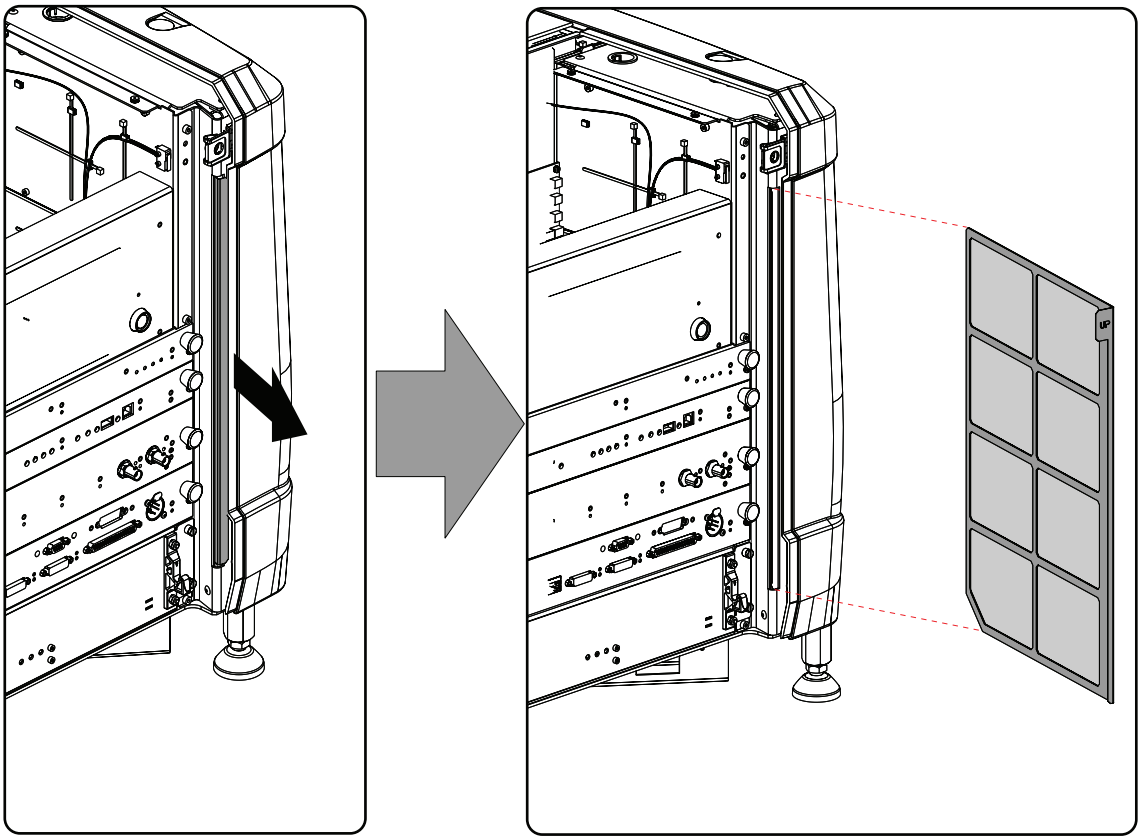

Image B–1 Front dust filter

## Clean the dust filter

1. Remove most contamination gently with a vacuum cleaner in an other room or outside.
2. Blow remaining dust away with clean (without oil/lubricant) compressed air in an other room or outside. Do not hold compressor nozzle too close to the projector filters, as this may also cause damage.

These dust filters are fragile. Clean them gently!

## Mount the dust filter

1. Insert the dust filter with the “up” indication to the top of the projector.

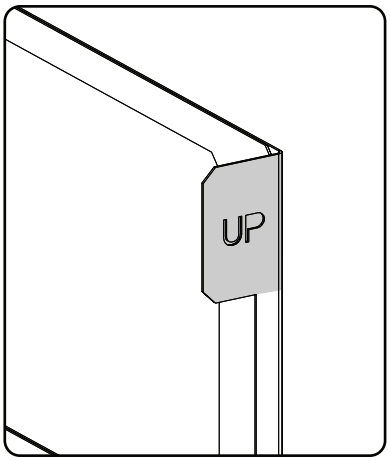


Image B–2 Up indication

2. Push the filter completely in.
3. Reinstall the input cover.

# B.2 Remove and clean both bottom dust filters

## How to remove

1. Remove the side cover.
2. Slide out the bottom front dust filter.

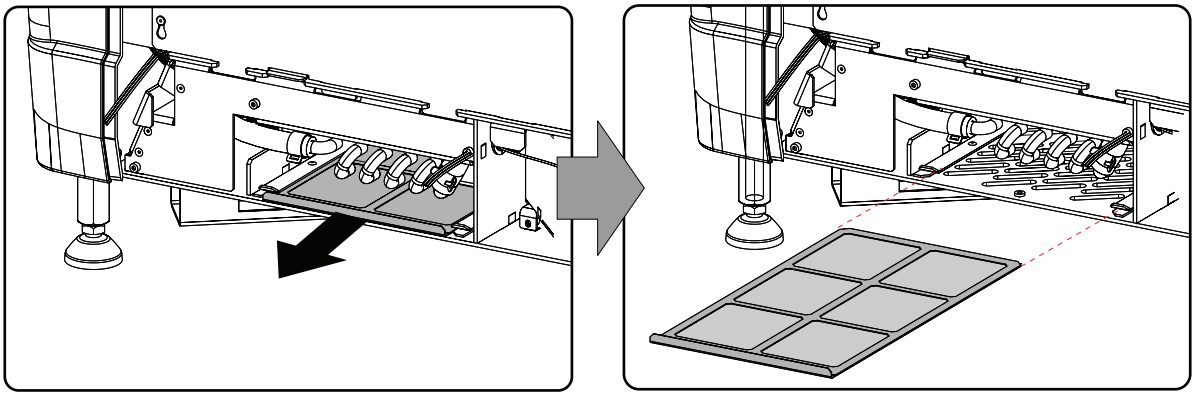

Image B–3 Bottom front dust filter

3. Slide out the bottom back dust filter.

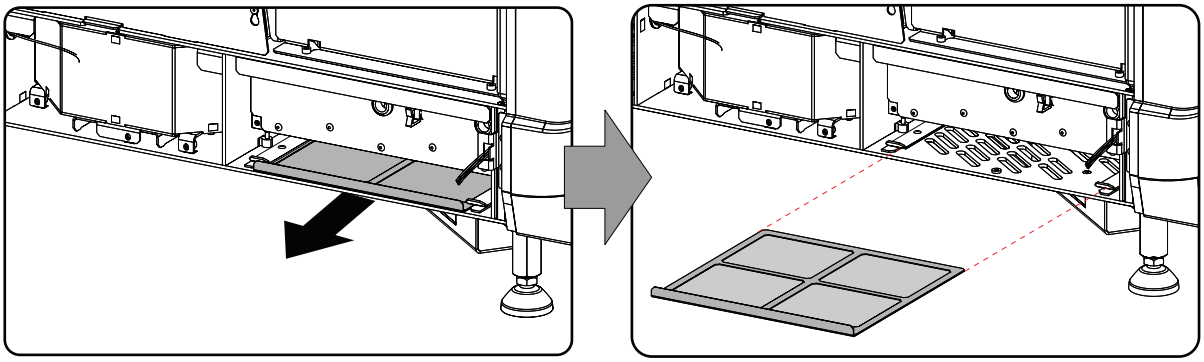

Image B–4 Bottom back dust filter

## Clean the dust filter

1. Remove most contamination with a vacuum cleaner in an other room or outside.
2. Blow remaining dust away with compressed air in an other room or outside.

These dust filters are fragile. Clean them gently!

## Mount the dust filters

1. Insert the dust filter with the handle upwards. Small filter at the back, big filter at the front.
2. Push the filters completely in until they click into position.
3. Reinstall the side cover.

# B.3 Cleaning the exterior of the projector

### How to clean the exterior of the projector ?

1. Switch off the projector and unplug the projector from the mains power net.
2. Clean the housing of the projector with a damp cloth. Stubborn stains may be removed with a cloth lightly dampened with a mild detergent solution.

# Removal and installation of the projector covers

# C


C.1 Removal of the lamp cover ..... 581
C.2 Removal of the rear cover ..... 583
C.3 Removal of the input cover ..... 584
C.4 Removal of the front cover ..... 586
C.5 Removal of the side cover ..... 588
C.6 Installation of the front cover ..... 590
C.7 Installation of the input cover ..... 592
C.8 Installation of the lamp cover ..... 593
C.9 Installation of the rear cover ..... 595
C.10 Installation of the side cover ..... 596


**WARNING:** All procedures in this chapter may only be performed by “qualified service technicians” .

**WARNING:** Disconnect the power to the circuit mains terminals and unplug the power cord at UPS INLET, unless otherwise specified in the procedure.

## Location of the covers

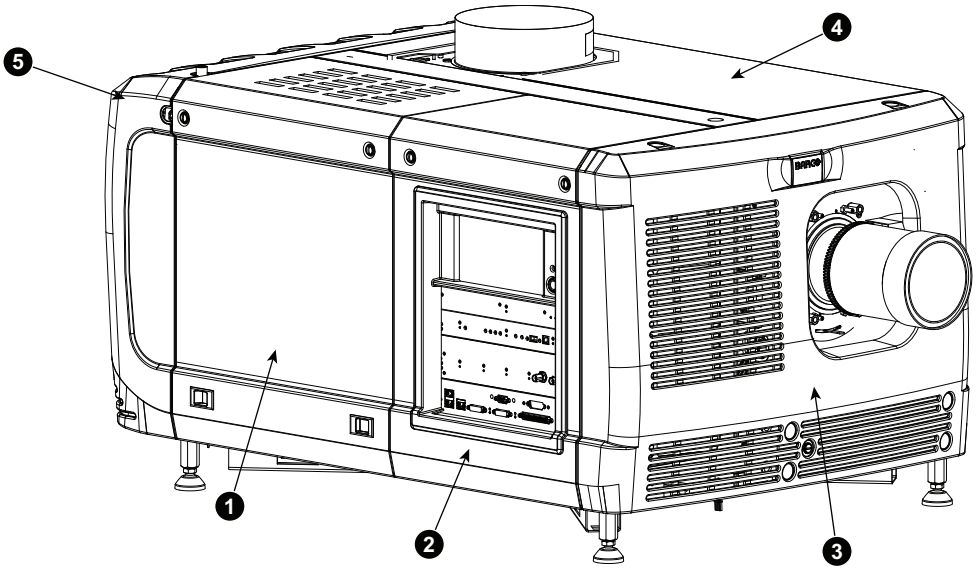


Image C–1 Location of the covers

1 Lamp cover
2 Input cover
3 Front cover
4 Side cover
5 Rear cover

All cover can be individually removed.

# C.1 Removal of the lamp cover

## Required tools

Flat screwdriver

## How to remove

1. Release both captive screws on top of the lamp cover.

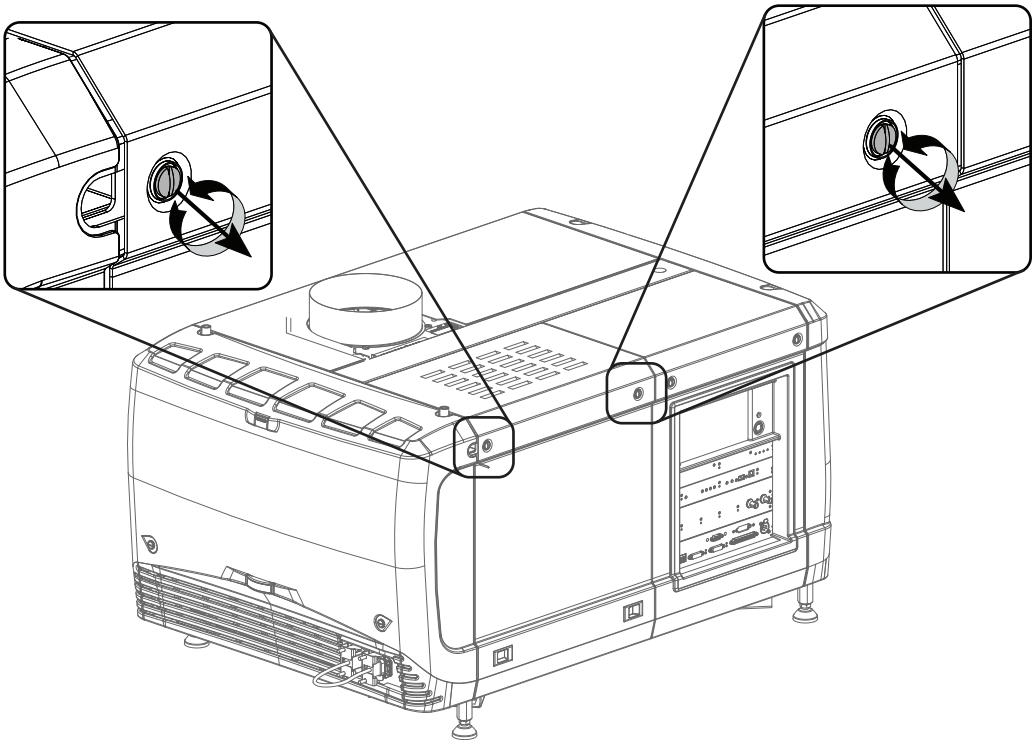

Image C–2 Lamp cover, fasting screws

2. Push both lock to each other to release the locks and pull at the same time the bottom side of the cover away form the projector.

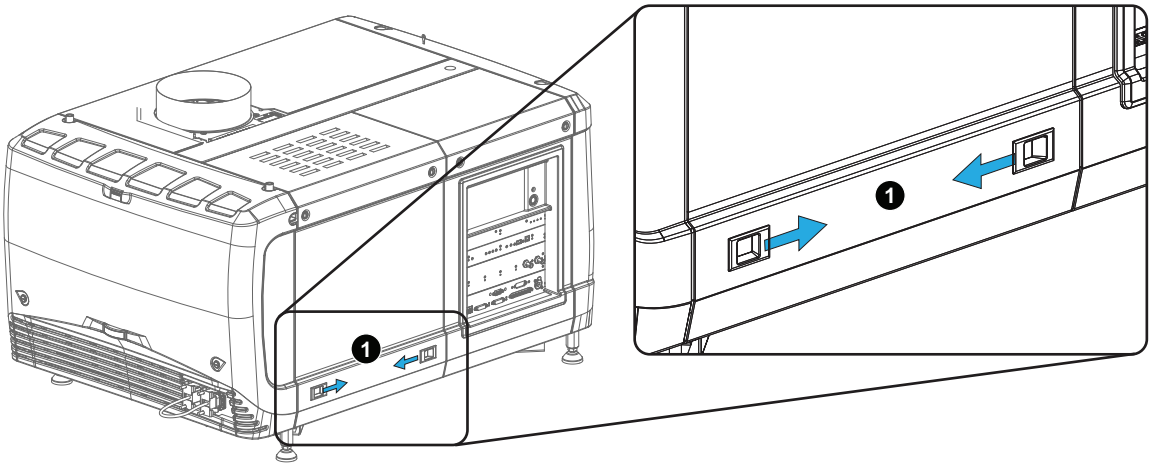


Image C–3 Lamp cover, locks

3. Take off the cover.

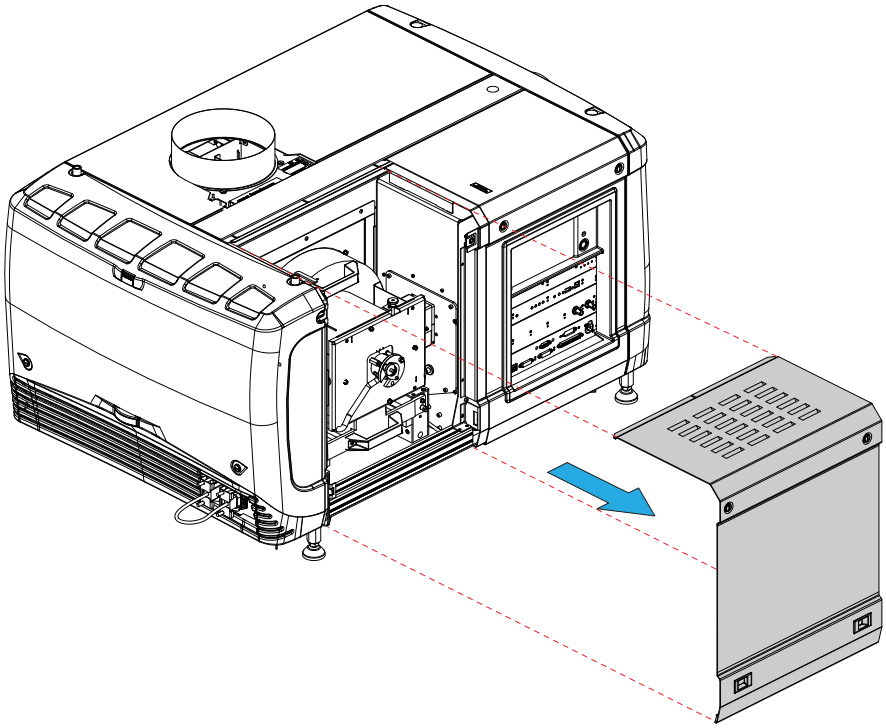

Image C–4 Lamp cover, removal

# C.2 Removal of the rear cover

## Required tools

Flat screwdriver

## How to remove

1. Release both captive screws almost at the bottom of the rear cover using a flat screw driver (1).

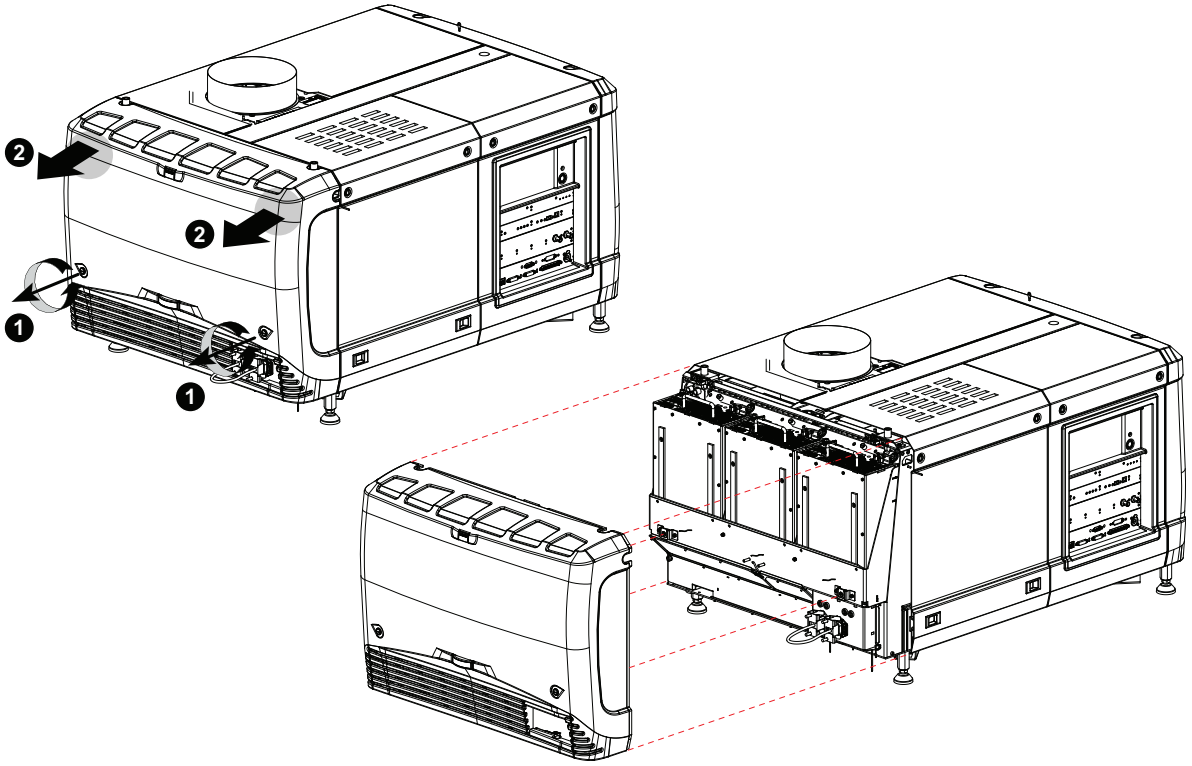


Image C–5 Rear housing removal

2. Remove the rear cover of the projector doing the following:
   1. gently pull out the top covers of the rear cover (2).
   2. then move the rear cover away from the projector.

# C.3 Removal of the input cover

## Required tools

Flat screwdriver

## How to remove

1. Release both captive screws at the top of the input cover using a flat screw driver.

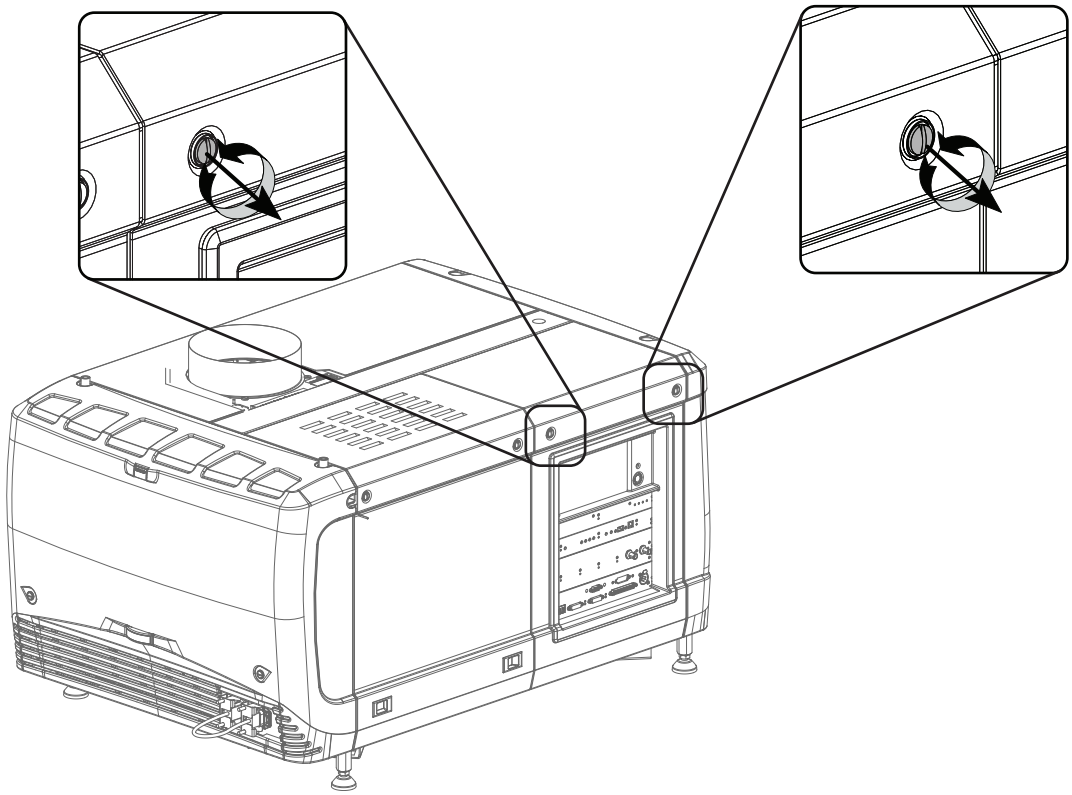

Image C–6 Input cover, fixation

2. Remove the input cover as follow:
   1. Pull the bottom side of the cover to you until the cover is unlocked.
   2. Slide the full cover away from the projector.

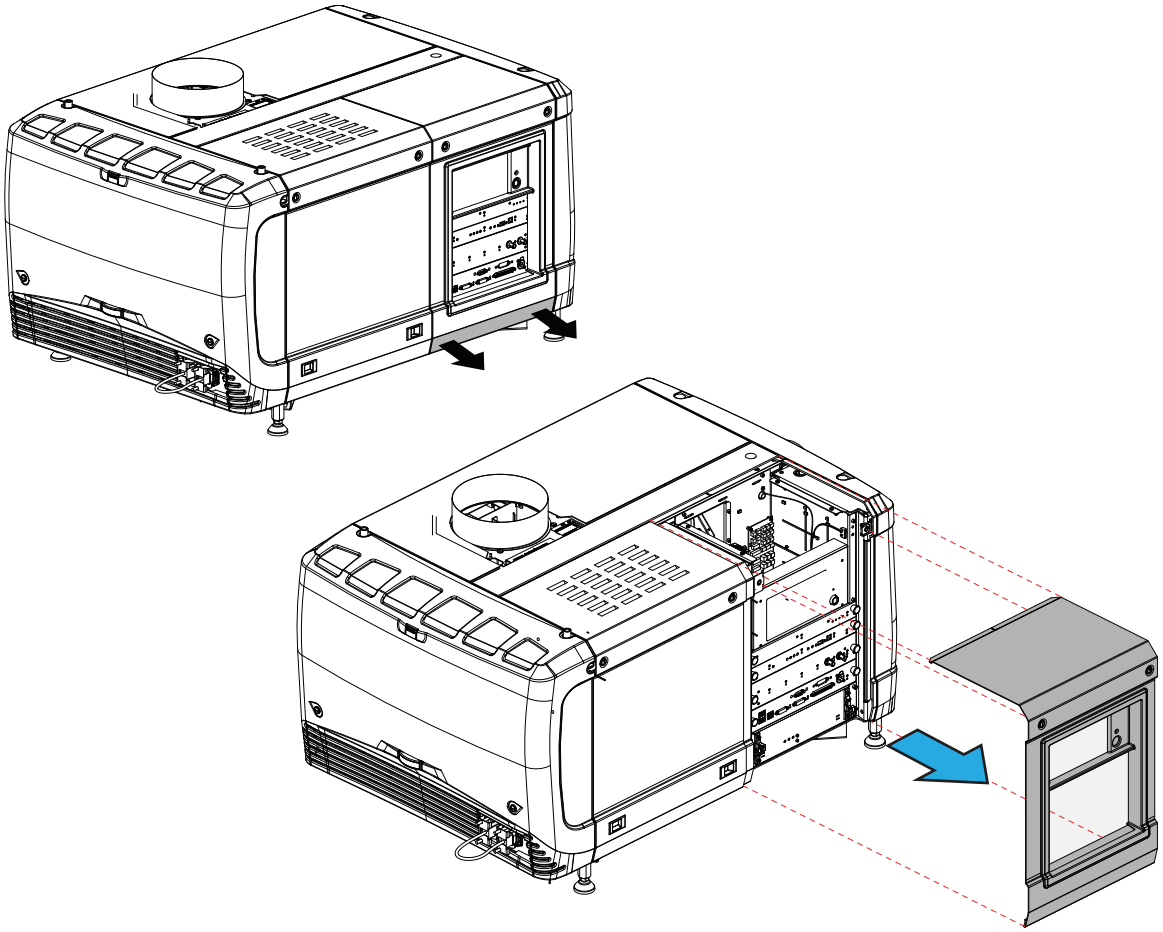

Image C–7 Input cover removal

# C.4 Removal of the front cover

## Required tools

Flat screwdriver

## How to remove

1. Check if the lens is removed.
2. Remove the rubber dust ring from the lens holder.

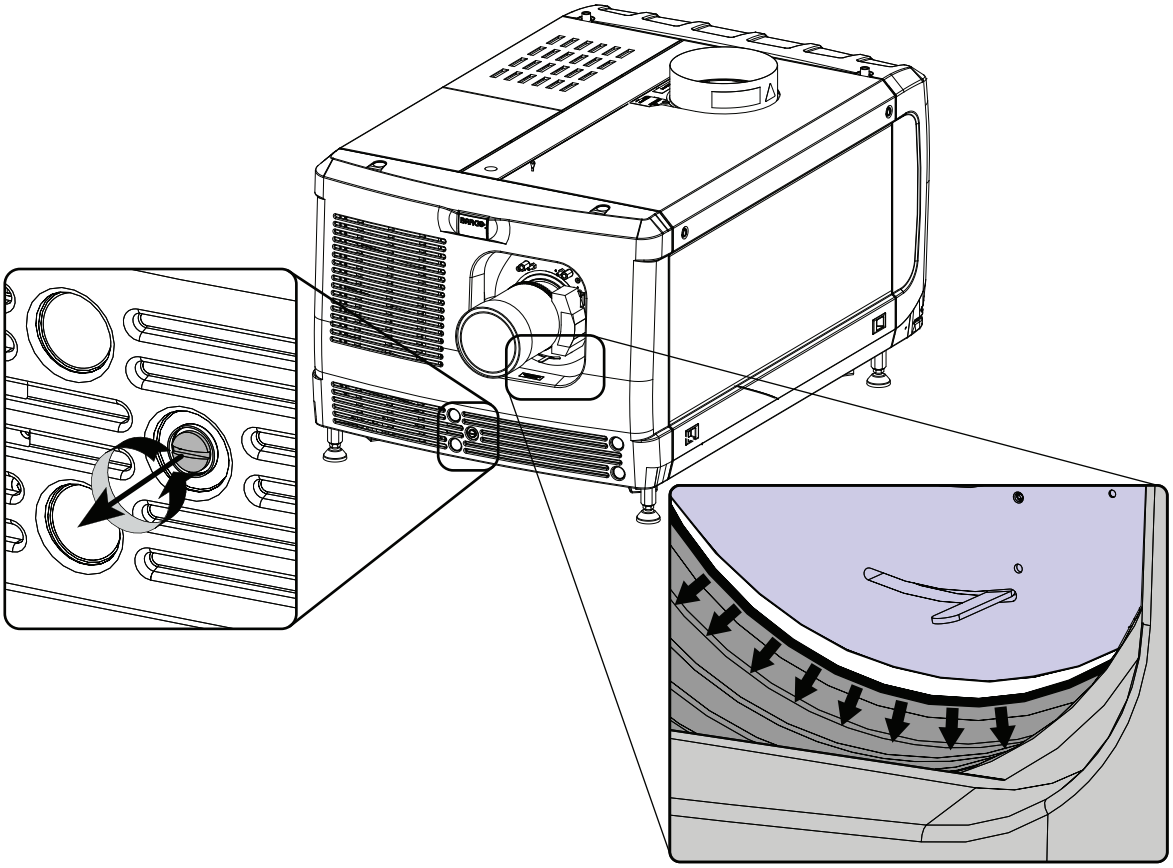

Image C–8 Release cover removal

3. Release the captive screw at the middle bottom of the front cover.
4. Remove the front cover as follow:
   1. standing in front of the projector, pull the top side of the cover to you until it is unlocked.
   2. slide the cover away from the projector.

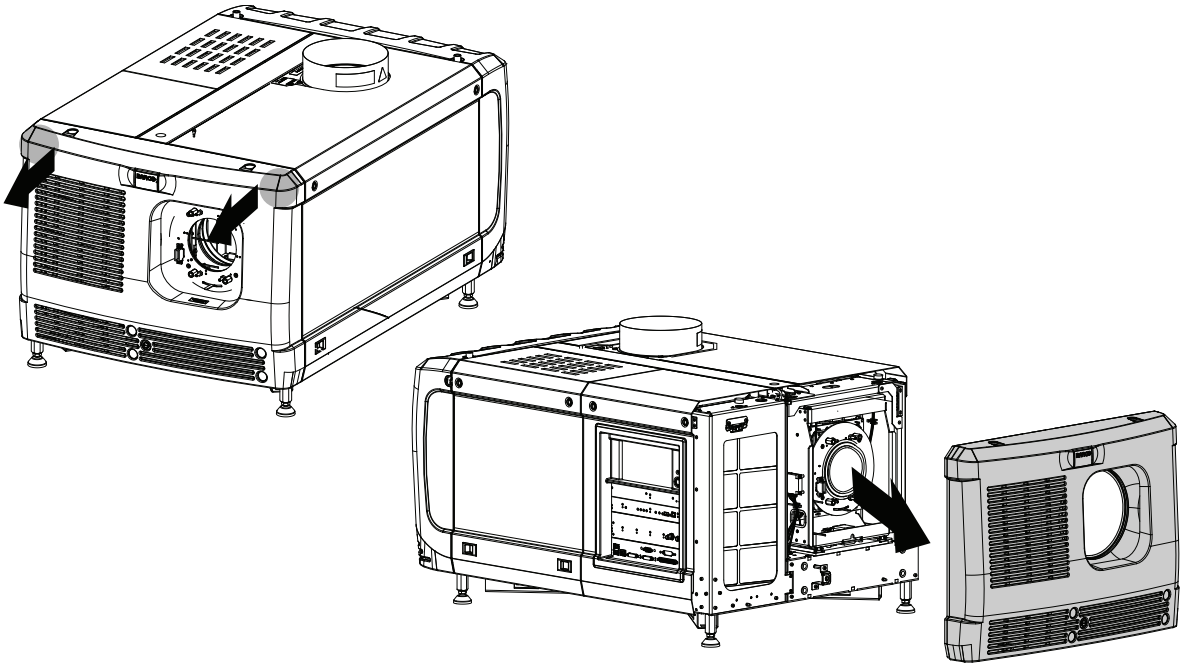

Image C–9 Remove front cover

# C.5 Removal of the side cover

## Required tools

Flat screwdriver

## How to remove

1. Release both captive screws on top of the side cover.

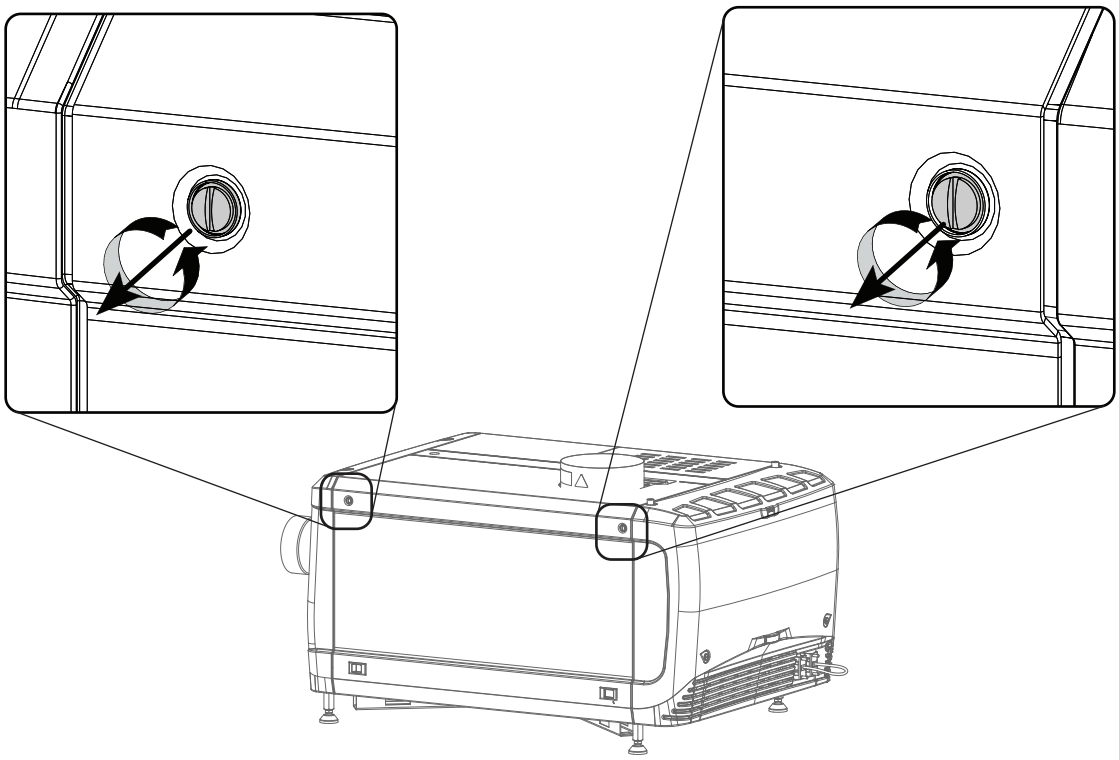

Image C–10 Captive screws

2. Push both lock to each other to release the locks and pull at the same time the bottom side of the cover away form the projector.

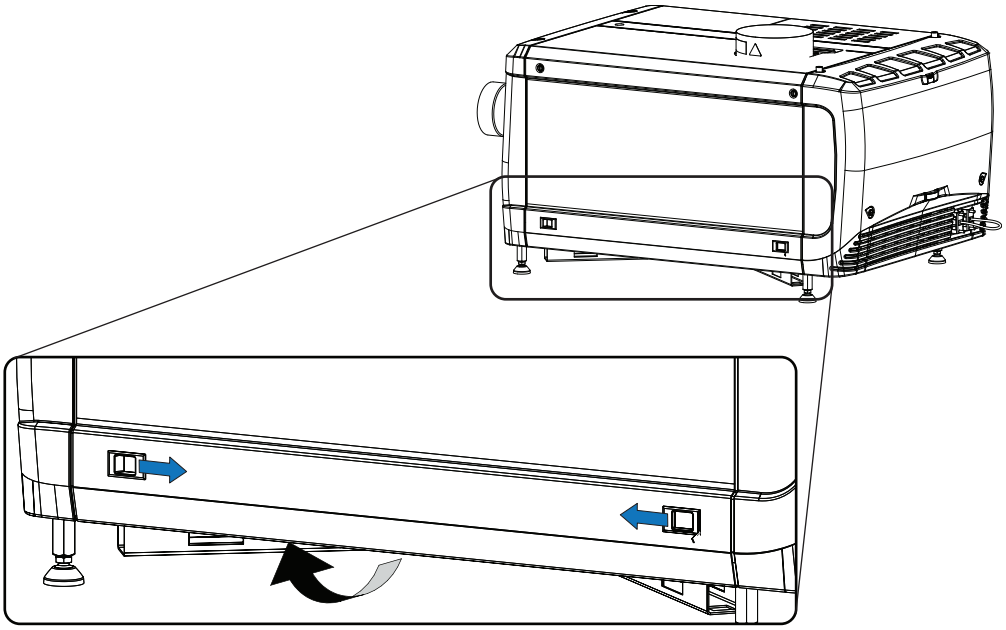

Image C–11 Unlock side cover

3. Take off the cover.

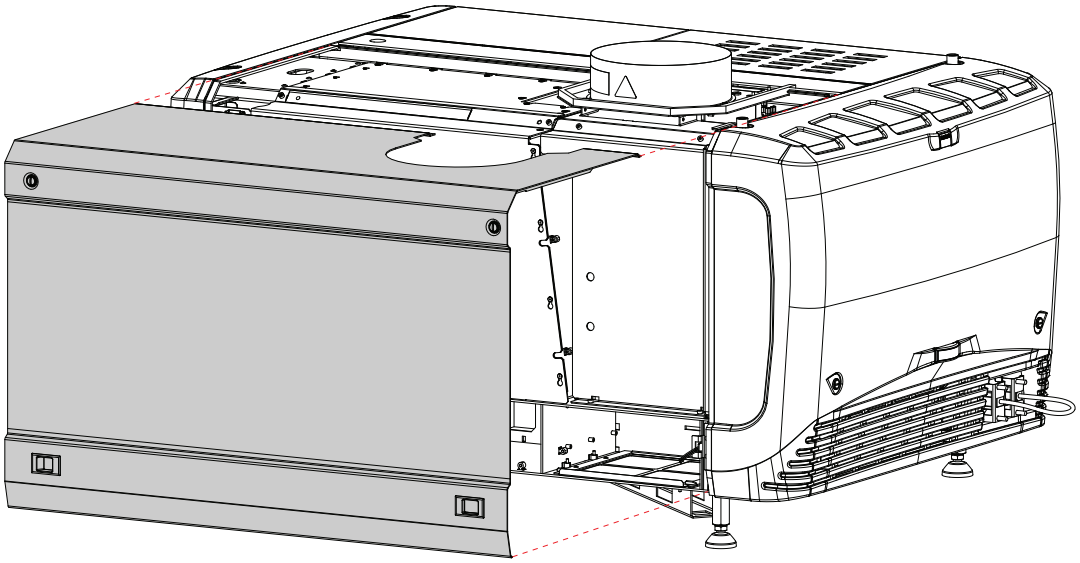

Image C–12 Side cover

# C.6 Installation of the front cover

## Required tools

Flat screwdriver

## How to install

1. Ensure that no lens is mounted.
2. Execute the next steps to install the front cover:
   1. Hook the bottom side of the cover to the projector.
   2. Gently push the top side of the cover into position.
   3. Ensure that the locking studs click into their receivers.

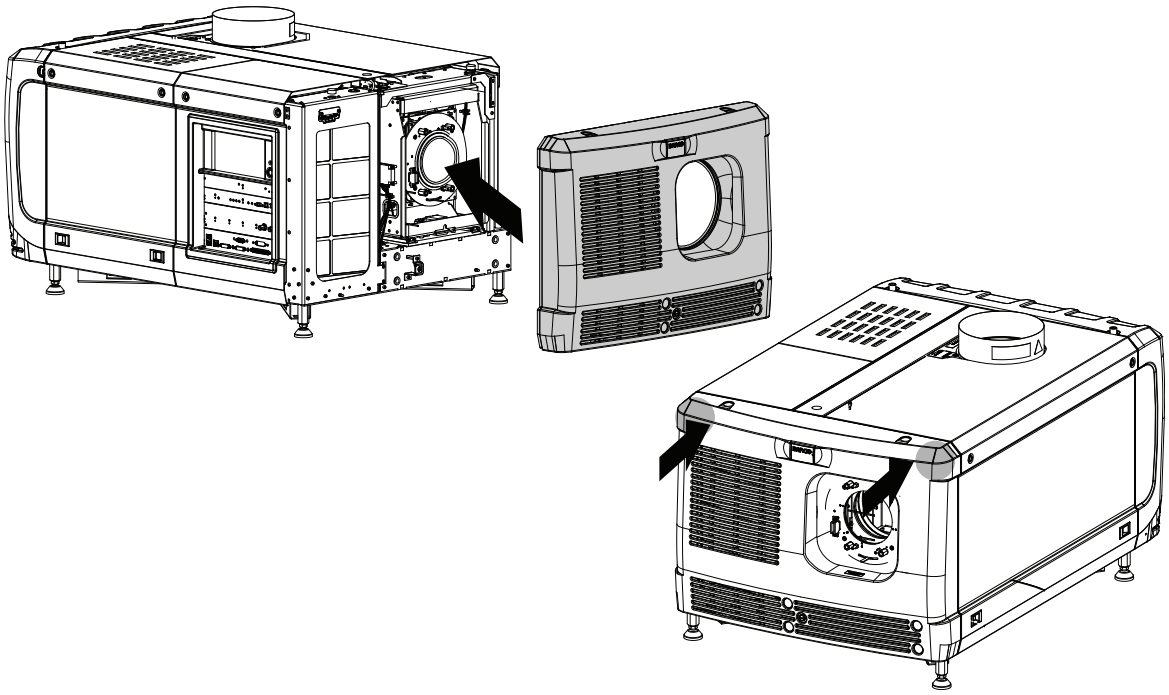

Image C–13 Mount front cover

3. Secure the front cover by locking the captive screw in the middle at the bottom of the front cover.

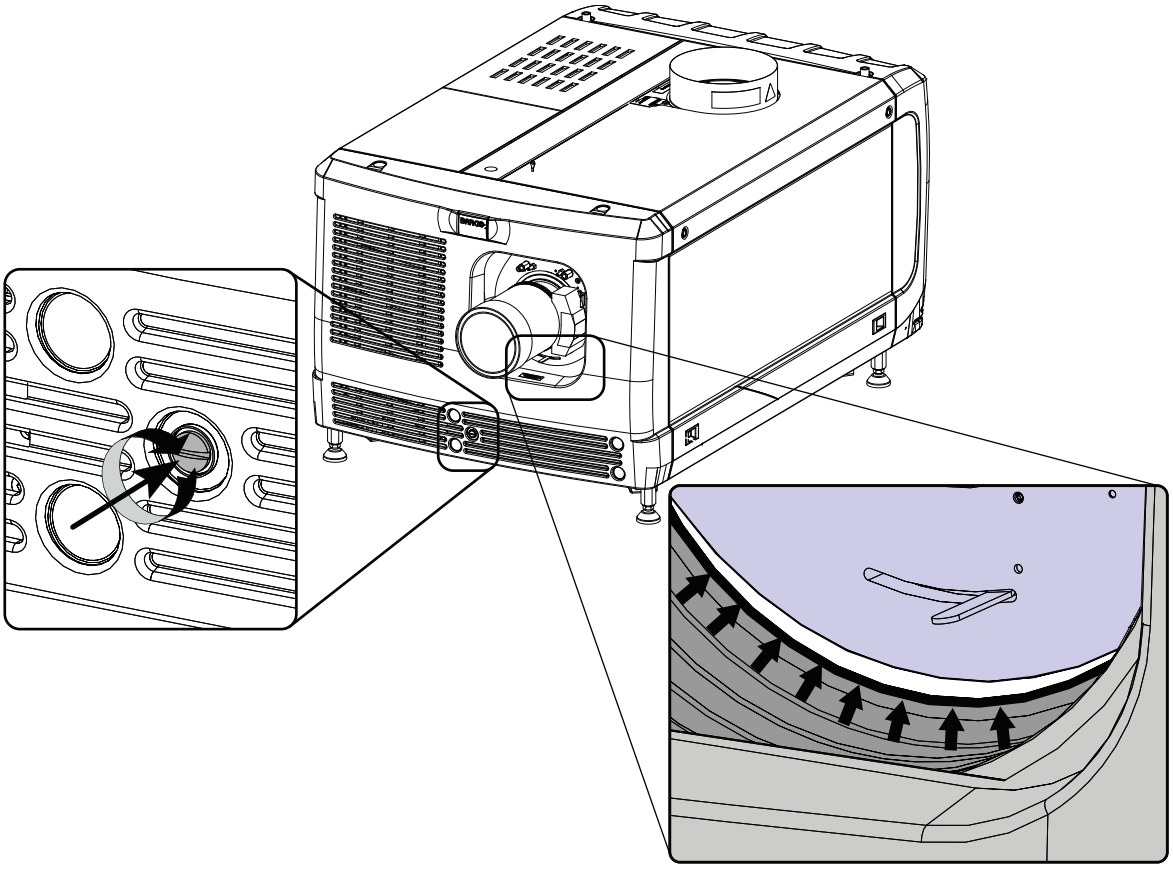

Image C–14 Secure front cover

4. Reinstall the rubber dust ring around the lens holder.

# C.7 Installation of the input cover

## Required tools

Flat screwdriver

## How to install

1. Place the top side of the cover on its place.

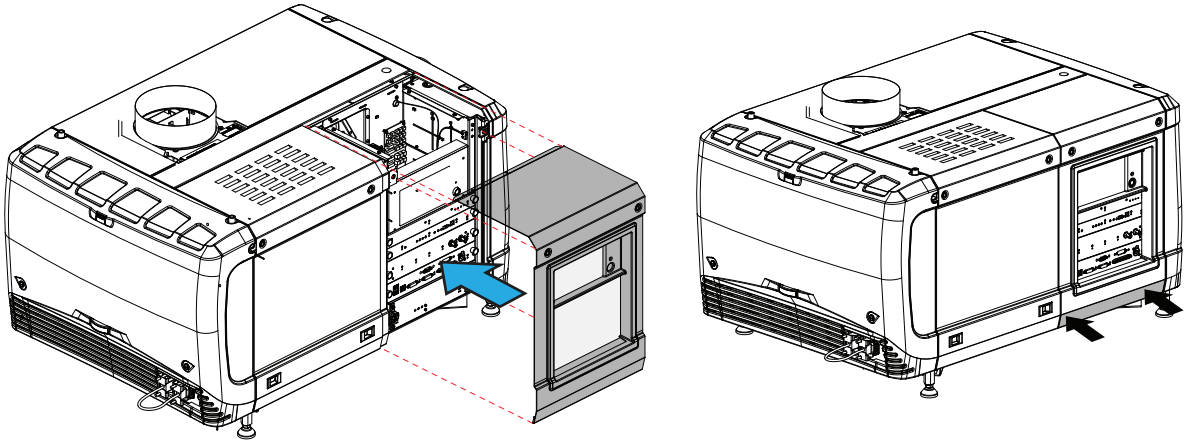

Image C–15 Mount input cover

2. Gently move the bottom side of the cover towards the projector and push the bottom side until the locking studs click in the receivers.

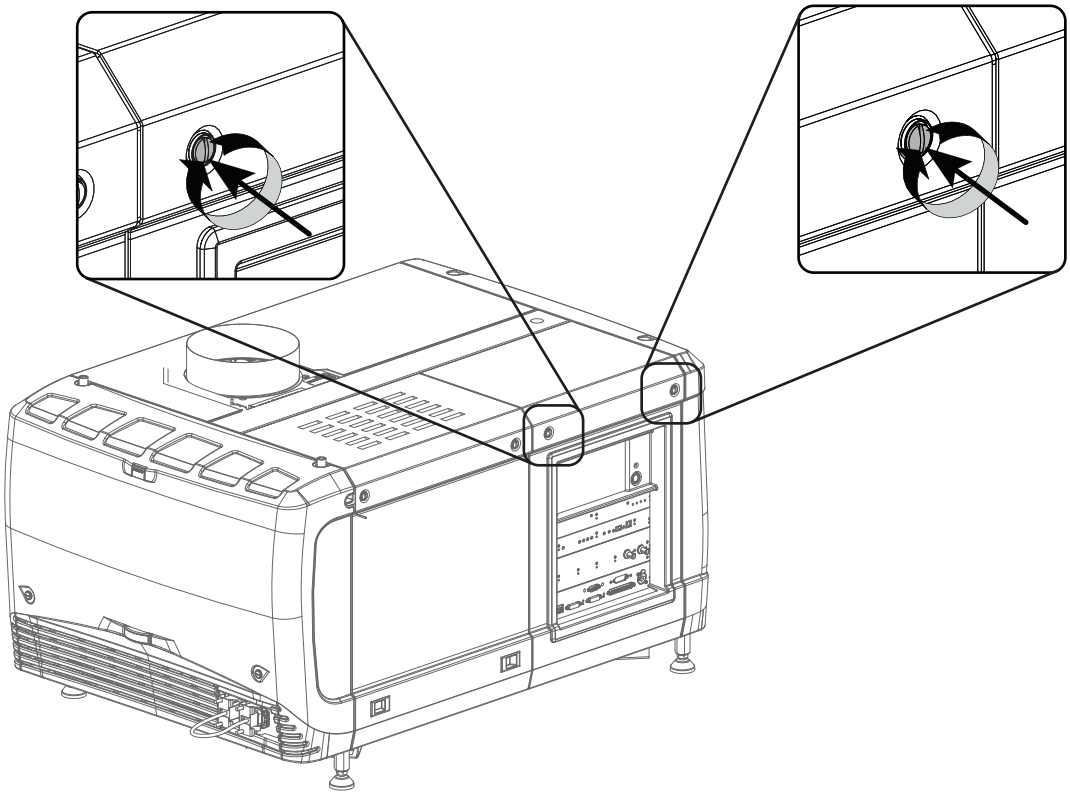

Image C–16 Secure input cover

3. Secure the cover by fastening the captive screw.

# C.8 Installation of the lamp cover

## Required tools

Flat screwdriver

## How to install

1. Place the top side of the cover on its place.

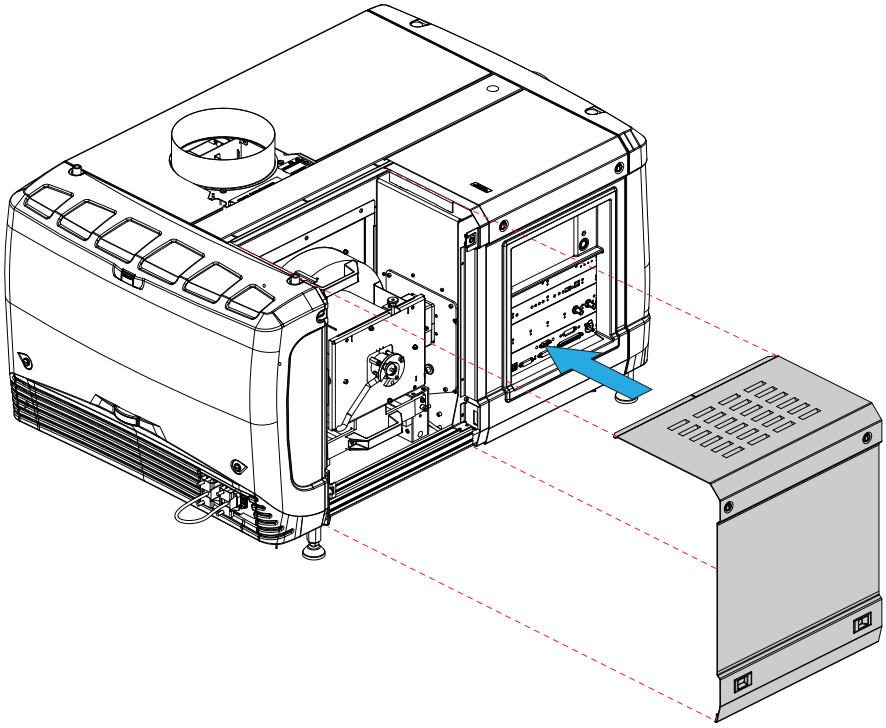

Image C–17 Mount lamp cover

2. Close the cover as follow:
   1. Gently move the bottom side of the cover towards the projector
   2. Push both lock to each other and push at the same time the cover against the projector frame.
   3. Release both locks so that they lock in their receivers.
3. Secure the cover by fasting both captive screws.

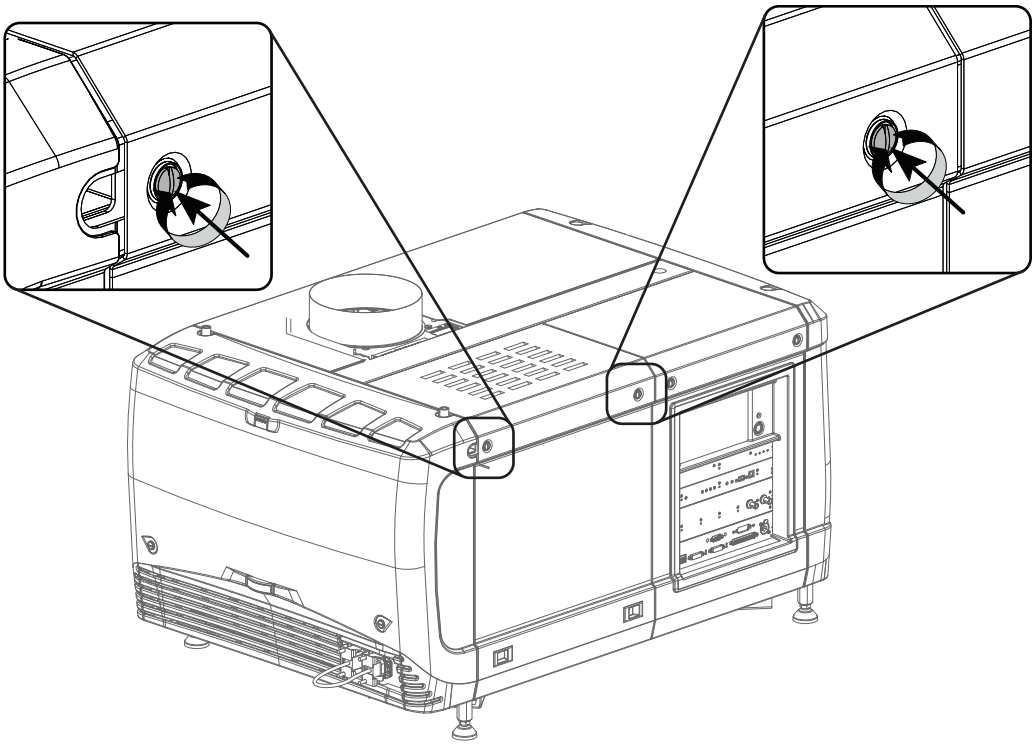

Image C–18 Secure lamp cover

# C.9 Installation of the rear cover

## Required tools

Flat screwdriver

## How to install

1. Install the rear cover of the projector doing the following:
   1. Bring the rear cover towards its final position.
   2. Gently push the locking studs into the receivers (1).

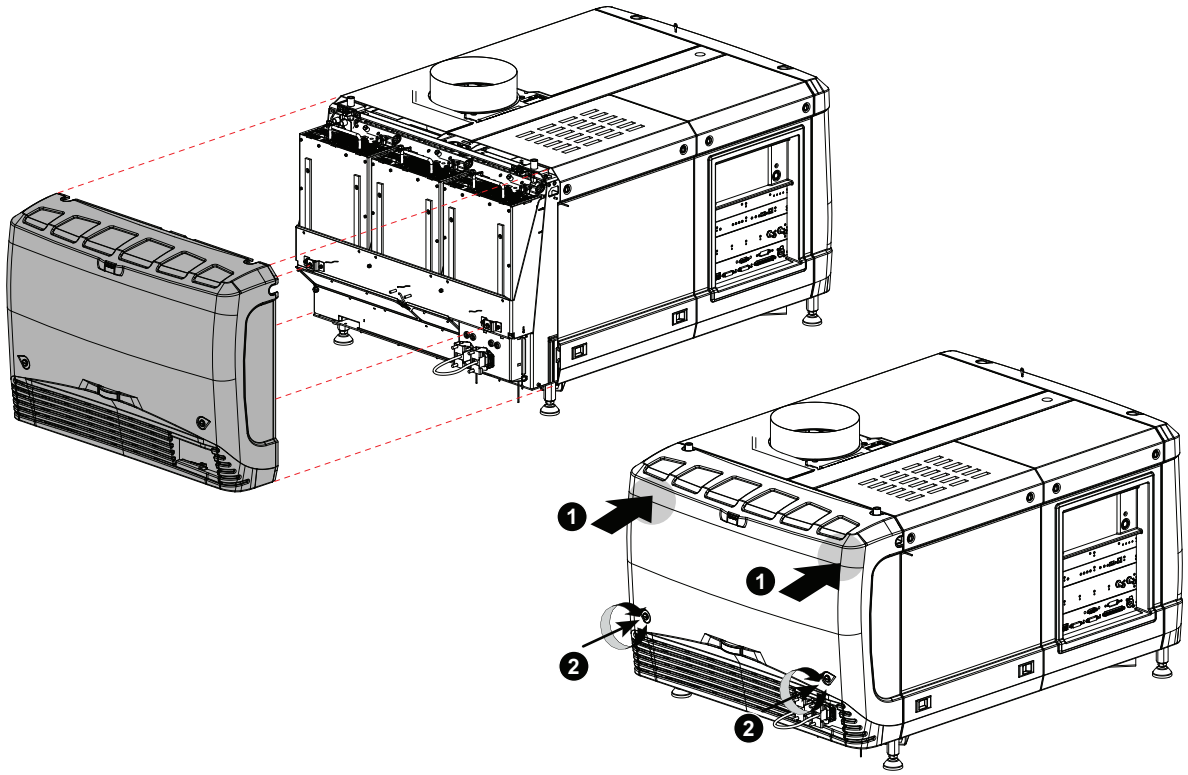


Image C–19 Mount rear cover

2. Secure the cover by fastening the captive screw at the bottom of the rear cover (2).

# C.10 Installation of the side cover

## How to install

1. Place the top of the side cover on its place.
2. Close the cover as follow:
   1. Gently move the bottom side of the cover towards the projector
   2. Push both lock to each other and push at the same time the cover against the projector frame.
   3. Release both locks so that they lock in their receivers.

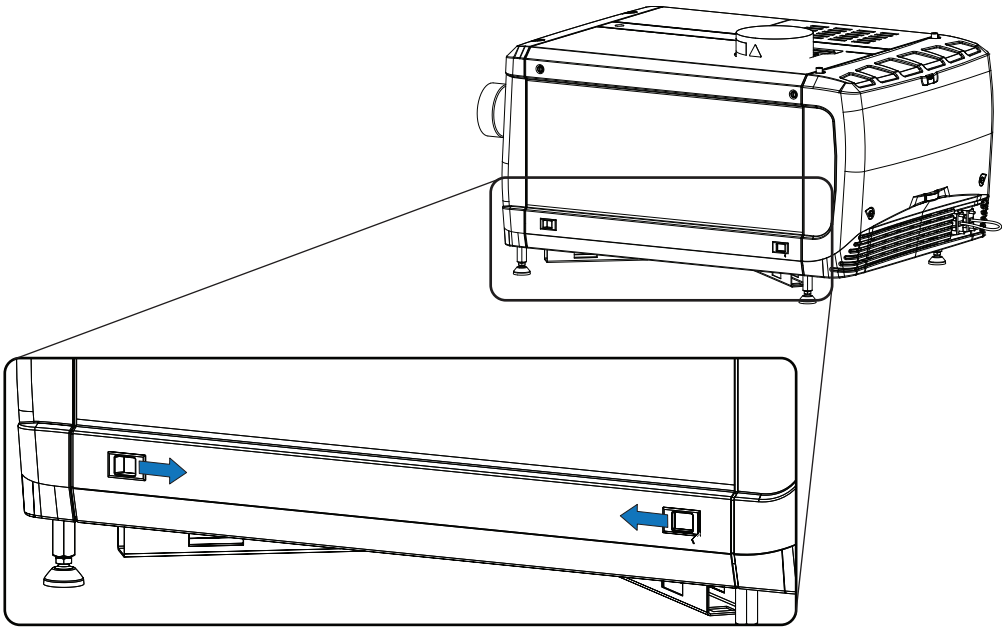

Image C–20

3. Secure the cover by fasting both captive screws.

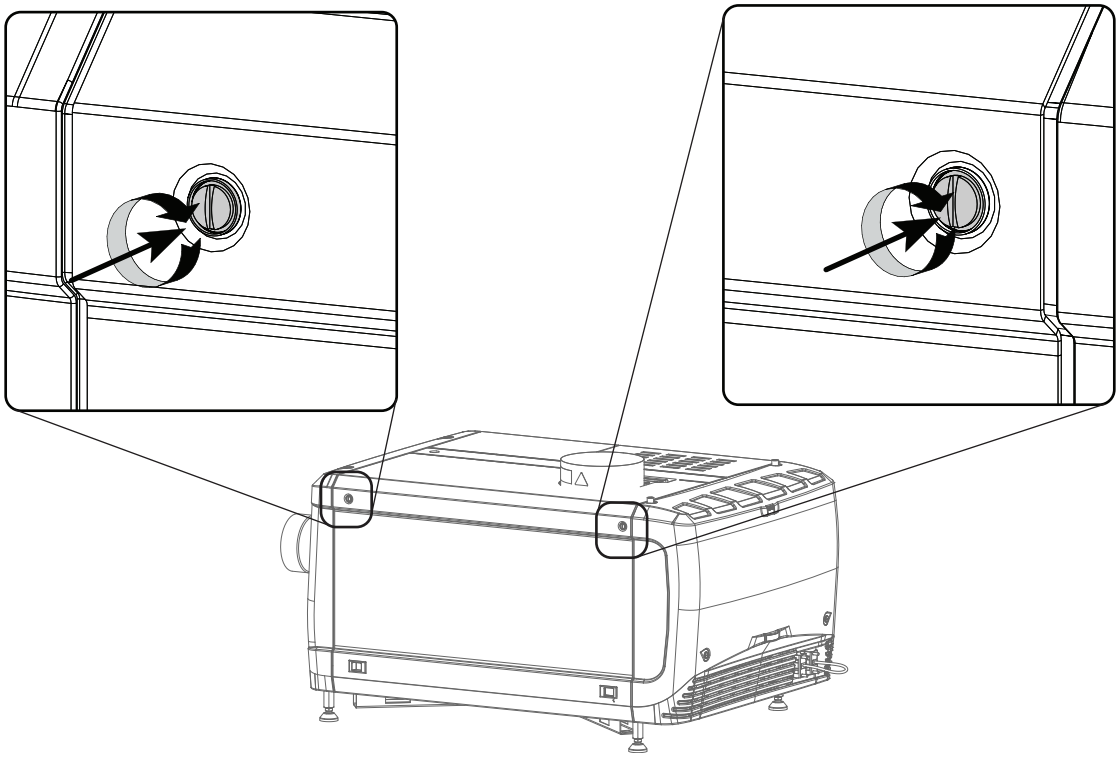

Image C–21 Lock side cover

# Pin configurations

D

D.1 About General Purpose Inputs & Outputs (GPIO) ..... 598
D.2 Pin configurations of the communication ports ..... 600
D.3 Pin configurations of the inputs ..... 602

# D.1 About General Purpose Inputs & Outputs (GPIO)

## General Purpose inputs

Eight (8) opto-isolated general purpose inputs are available. These inputs are used to trigger the execution of macro files. For more explanation about the association of a macro to a GPI, consult the user guide of the Communicator touch panel.

## Input voltage

The inputs can be directly driven from a TTL or CMOS output.

- The shape of the pulse must be rectangular.
- The duration of the pulse must be at least 1.6 milliseconds (shorter pulses are considered as a switch bounce)
- Minimum voltage : $V_{min}$ = 3,3 V
- Maximum voltage : $V_{max}$ = 24 V

## External power supply

When interfacing with contact closure outputs, an external power supply needs to be provided. Depending upon the configuration a suitable pull-up resistor needs to be added as well.

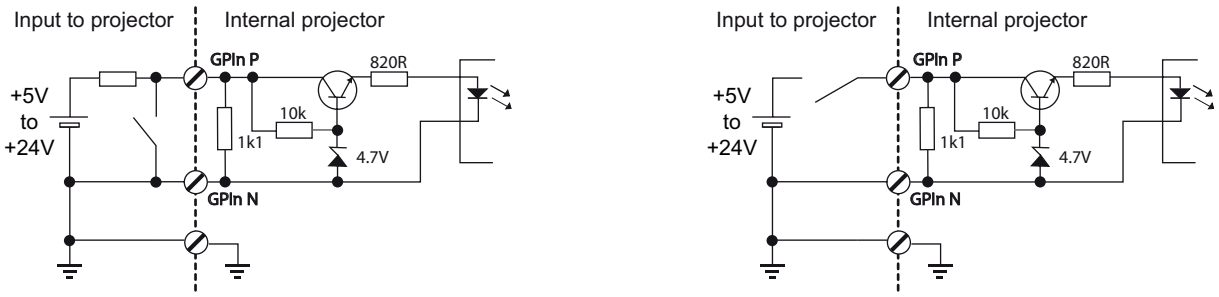


Image D–1 Left diagram: with pull-up resistor. Right diagram: without pull-up resistor.

## Cables

When long cable connections are required the use of shielded cables with twisted pairs is recommended. One twisted pair is to be assigned to each GP Input pair.

## How to make the connection

When the power supply used to provide the DC voltage is isolated from ground (for example in the case of an AC adapter) it is recommended that the minus pole of that power supply is connected to ground (or to the projector chassis). This will avoid high common mode voltages at the projector GP Inputs. If that same power supply is used for other parts of the system, take care not to create ground loops. In any case when shielded cables are used that shield should be connected to the projector chassis.

## General Purpose outputs

Eight (8) opto-isolated outputs are available, where four are dedicated for TI. The other general purpose outputs can be controlled via software.

## About an output

The output can generate a falling edge, rising edge, toggle or continuous toggle.

- **Generate Falling Edge** – generate a falling edge on the external GPO port if the present state of the output is high. If the present state of the external GPO is low, no edge will be generated.
- **Generate Rising Edge** – generate a rising edge on the external GPO port if the present state of the output is low. If the present state of the external GPO is high, no edge will be generated.
- **Generate Toggle** – generate a toggle on the external GPO port. If the present state of the output is low, a rising edge will be generated, followed by a falling edge. If the present state of the output is high, a falling

edge will be generated, followed by a rising edge. The rate of toggle will be the vertical sync rate (edge transition at each vsync). Pulse width = 20 milliseconds.

- **Generate Continuous Toggle** - This command will generate a continuous toggle of the external GPO port. This toggle will continue until a *Generate Falling Edge*, *Generate Rising Edge*, or *Generate Toggle* command is received. The rate of toggle is 24Hz. .

## Output transistor

- Maximum output driving voltage : $V_{max}$ = 70 V
- Maximum current : $I_{max}$ = 30 mA
- Maximum power dissipation : 120 mW

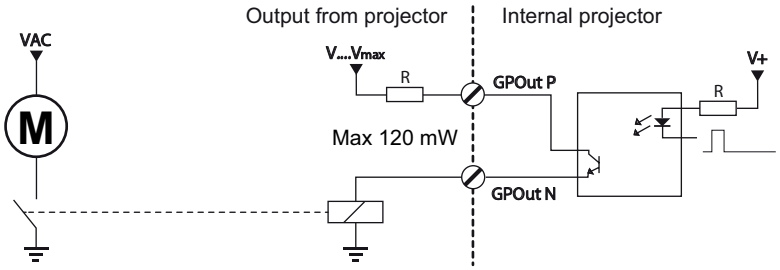


Image D–2

# D.2 Pin configurations of the communication ports

### RS232IN

| RS232 IN | | | |
|---|---|---|---|
| 1 | - | 6 | - |
| 2 RXE- | Receive Data (RD or RX or RXD) | 7 | - |
| 3 TXE- | Transmitted Data (TD or TX or TXD) | 8 | - |
| 4 | - | 9 | - |
| 5 GND | Signal Ground (GND) | - | - |

### General Purpose IN/OUT

| General Purpose In/Out | | | |
|---|---|---|---|
| 1 | 3D Input Reference P | 20 | 3D Input Reference N |
| 2 | 3D Display Reference P | 21 | 3D Display Reference N |
| 3 | GPIN 3 P (reserved) | 22 | GPIN 3 N (reserved) |
| 4 | GPIN 4 P (reserved) | 23 | GPIN 4 N (reserved) |
| 5 | GPIN 5 P | 24 | GPIN 5 N |
| 6 | GPIN 6 P | 25 | GPIN 6 N |
| 7 | GPIN 7 P | 26 | GPIN 7 N |
| 8 | GPIN 8 P | 27 | GPIN 8 N |
| 9 | 3D Output Reference P | 28 | 3D Output Reference N |
| 10 | GPOUT 2 P (reserved) | 29 | GPOUT 2 N (reserved) |
| 11 | GPOUT 3 P (reserved) | 30 | GPOUT 3 N (reserved) |
| 12 | GPOUT 4 P | 31 | GPOUT 4 N |
| 13 | GPOUT 5 P | 32 | GPOUT 5 N |
| 14 | GPOUT 6 P | 33 | GPOUT 6 N |
| 15 | GPOUT 7 P | 34 | GPOUT 7 N |
| 16 | GPOUT 8 P | 35 | GPOUT 8 N |
| 17 | reserved | 36 | reserved |
| 18 | reserved | 37 | reserved |
| 19 | reserved | | |

### Ethernet port

| | | | 10/100 Base-T — RJ45 port | 1000 Base-T — RJ45 port |
|---|---|---|---|---|
| **Pin** | **Pair** | **Color** | **Description** | **Description** |
| 1 | 3 | white/green | TXD+ | TX0+ |
| 2 | 3 | green | TXD- | TX0- |
| 3 | 2 | white/orange | RXD+ | RX0+ |

| | | | 10/100 Base-T — RJ45 port | 1000 Base-T — RJ45 port |
|---|---|---|---|---|
| **Pin** | **Pair** | **Color** | **Description** | **Description** |
| 4 | 1 | blue | — | TX1+ |
| 5 | 1 | white/blue | — | TX1- |
| 6 | 2 | orange | RXD- | RX0- |
| 7 | 4 | white/brown | — | Rx1+ |
| 8 | 4 | brown | — | RX1- |

## Peripheral Port

| Pin | Name |
|---|---|
| 1 | +5V |
| 2 | SCL |
| 3 | SDA |
| 4 | +24V |
| 5 | GND |

## 3D connector

| Pin | Name | Pin | Name |
|---|---|---|---|
| 1 | +12V | 9 | +12V |
| 2 | Grnd | 10 | 3D Input Reference - |
| 3 | Grnd | 11 | 3D Display Reference + |
| 4 | RS232 RX | 12 | 3D Display Reference - |
| 5 | RS232 TX | 13 | CONN_3D MODE - |
| 6 | CONN_3D_MODE + | 14 | CONN_SYNC - |
| 7 | CONN_SYNC + | 15 | - |
| 8 | 3D Input Reference + | | |

# D.3 Pin configurations of the inputs

## DVI-D

| DVI IN A & B | | | | | | | |
|---|---|---|---|---|---|---|---|
| 1 | RX2- | 7 | DDC Data | 13 | nc | 19 | RX0 Shield |
| 2 | RX2+ | 8 | nc | 14 | +5V | 20 | nc |
| 3 | RX2 Shield | 9 | RX1- | 15 | GND | 21 | nc |
| 4 | nc | 10 | RX1+ | 16 | Hot Plug Detect | 22 | TMDS Clock Shield |
| 5 | nc | 11 | RX1 Shield | 17 | RX0- | 23 | TMDS RXC+ |
| 6 | DDC Clock | 12 | nc | 18 | RX0+ | 24 | TMDS RXC- |

# Input formats

E

# E.1 Input formats

## DVI Input formats

| Input | Source standard | Vertical rate | Scan type | Color space | Sampling | Color depth |
|---|---|---|---|---|---|---|
| Single DVI | VESA (640x480) | 60 | Progressive | RGB | 4:4:4 | 8 bit |
| Single DVI | VESA (640x480) | 72 | Progressive | RGB | 4:4:4 | 8 bit |
| Single DVI | VESA (800x600) | 60 | Progressive | RGB | 4:4:4 | 8 bit |
| Single DVI | VESA (800x600) | 72 | Progressive | RGB | 4:4:4 | 8 bit |
| Single DVI | VESA (1024x768) | 60 | Progressive | RGB | 4:4:4 | 8 bit |
| Single DVI | VESA (1024x768) | 70 | Progressive | RGB | 4:4:4 | 8 bit |
| Single DVI | VESA (1280x1024) | 60 | Progressive | RGB | 4:4:4 | 8 bit |
| Single DVI | 1280x720 | 60 | Progressive | RGB | 4:4:4 | 8 bit |
| Single DVI | 1920x1080 | 60 | Progressive | RGB | 4:4:4 | 8 bit |
| Single DVI | 2048x1080 | 50/60 | Progressive | RGB | 4:4:4 | 8 bit |
| Single DVI | 1920x1080i | 50/60 | Interlaced | RGB | 4:4:4 | 8 bit |
| Twin DVI | ACS (2048x1080) | 50/59.94 | Progressive | RGB | 4:4:4 | 10 bit |
| Twin DVI | ACS (2048x1080) | 50/59.94 | Progressive | RGB | 4:4:4 | 12 bit |

## SMPTE 274M

| System no | System nomencla-ture | Luma or RGB samples per active line (S/AL) | Active lines per frame (AL/F) | Frame rate (Hz) | Interface sampling frequency fs (MHz) | Luma sample periods per total line (S/TL) | Total lines per frame |
|---|---|---|---|---|---|---|---|
| 4 | 1920 x 1080/ 60/I | 1920 | 1080 | 30 | 74.25 | 2200 | 1125 |
| 5 | 1920 x 1080/ 59.94/I | 1920 | 1080 | 30/1.001 | 75.25/1.001 | 2200 | 1125 |
| 6 | 1920 x 1080/ 50/I | 1920 | 1080 | 50 | 74.25 | 2640 | 1125 |
| 7 | 1920 x 1080/ 30P | 1920 | 1080 | 30 | 74.25 | 2200 | 1125 |
| 8 | 1920 x 1080/ 29.97/P | 1920 | 1080 | 30/1.001 | 74.25/1.001 | 2200 | 1125 |
| 9 | 1920 x 1080/ 25/P | 1920 | 1080 | 25 | 74.25 | 2640 | 1125 |
| 10 | 1920 x 1080/ 24/P | 1920 | 1080 | 24 | 74.25 | 2750 | 1125 |
| 11 | 1920 x 1080/ 23.98/P | 1920 | 1080 | 24/1.001 | 74.25/1.001 | 2750 | 1125 |

## SMPTE 296M

| System no | System nomencla-ture | Luma or RGB samples per active line (S/AL) | Active lines per frame (AL/F) | Frame rate (Hz) | Interface sampling frequency fs (MHz) | Luma sample periods per total line (S/TL) | Total lines per frame |
|---|---|---|---|---|---|---|---|
| 1 | 1280 x 720/60 | 1280 | 720 | 60 | 74.25 | 1650 | 750 |
| 2 | 1280 x 720/59.94 | 1280 | 720 | 60/1.001 | 74.25/1.001 | 1650 | 750 |
| 3 | 1280 x 720/50 | 1280 | 720 | 50 | 74.25 | 1980 | 750 |
| 4 | 1280 x 730/30 | 1280 | 720 | 30 | 74.25 | 3300 | 750 |
| 5 | 1280 x 720/29.97 | 1280 | 720 | 30/1.001 | 74.25/1.001 | 3300 | 750 |
| 6 | 1280 x 720/25 | 1280 | 720 | 25 | 74.25 | 3960 | 750 |
| 7 | 1280 x 720/24 | 1280 | 720 | 24 | 74.25 | 4125 | 750 |
| 8 | 1280 x 720/23.98 | 1280 | 720 | 24/1.001 | 74.25/1.001 | 4125 | 750 |

## SMPTE 260M

The system nomenclature for SMPTE 260M is 1920 x 1035 (1035 active lines) constrained to 60/60/1.001. All other parameters are the same as for SMPTE 274M.

# Glossary

**RS232**
An Electronic Industries Association (EIA) serial digital interface standard specifying the characteristics of the communication path between two devices using either D-SUB 9 pins or D-SUB 25 pins connectors. This standard is used for relatively short-range communications and does not specify balanced control lines. RS-232 is a serial control standard with a set number of conductors, data rate, word length and type of connector to be used. The standard specifies component connection standards with regard to computer interface. It is also called RS-232-C, which is the third version of the RS-232 standard, and is functionally identical to the CCITT V.24 standard. Logical '0' is > + 3V, Logical '1' is < - 3V. The range between -3V and +3V is the transition zone.

**Scheimpflug principle**
The "plane of sharp focus" can be changed so that any plane can be brought into sharp focus. When the DMD plane and lens plane are parallel, the plane of sharp focus will also be parallel to these two planes. If, however, the lens plane is tilted with respect to the DMD plane, the plane of sharp focus will also be tilted according to geometrical and optical properties. The DMD plane, the principal lens plane and the sharp focus plane will intersect in a line below the projector for downward lens tilt.

# List of tools

1,5 mm Allen wrench.
1.5mm Allen wrench.
10 mm nut driver.
10mm nut driver or flat screw driver.
10mm nut driver.
10mm open end wrench.
13 mm nut driver or open-end wrench
13mm nut driver.
13mm open end wrench.
17mm open end wrench.
2 mm Allen wrench.
2,5 mm Allen wrench.
2.5mm Allen wrench.
22 mm open-end wrench.
22mm open-end wrench.
2mm Allen wrench.
3 mm Allen wrench
3 mm Allen wrench.
3 mm Allen Wrench.
3mm Allen wrench (depends on design).
3mm Allen wrench.
4 mm Allen wrench
5,5 mm nut driver.
5.5 mm nut driver
5.5mm nut driver.
5.5mm open end wrench.
5mm Allen wrench.
6 mm open-end wrench.
6mm nut driver.
7 mm flat screw driver.
7mm nut driver or flat screw driver.
7mm nut driver.
7mm open-end wrench.
8mm Allen wrench.
Adjustable wrench
Allen key 2.5 mm
Allen key 3 mm
Allen wrench 3 mm
Allen wrench 3mm.
Allen wrench with ball point 3 mm
Authorization pin code.
Clean cotton cloth
Clean cotton cloth.
Clean micro fiber lens cleaning cloth (e.g. Toraysee® cloth(s))
Clean Toraysee® cloth or any micro fiber lens cleaning cloth.
Cleaning cloth (provided in kit)
Cloths
Colorimeter (e.g. CS-200 chroma meter from Konica Minolta or the PR-650 SpectraScan® from Photo Research)
Communicator software version 4.7.9 (or later)
Compressed air
Compressed air.
Cotton gloves.
Flat blade screw driver.
Flat blade screwdriver
Flat screw driver
Flat screw driver 6 mm
Flat screw driver 6 x 150
Flat screw driver.
Flat screwdriver
Flat screwdriver.

Flat torque screw driver
Flat torque screw driver 4 mm
Knife
Lamp protective container or protective cloth with two binders.
Latex or cotton gloves.
Lens cleaner (e.g. ZEISS lens cleaner, Purosol™ or other water based lens cleaner products)
Light meter.
Nitrile gloves (provided in kit)
Nut driver 10 mm
Nut driver 10mm.
Nut driver 13 mm
Nut driver 13mm.
Open-end wrench 7 mm
PH1 Phillips screw driver.
PH2 Phillips screwdriver.
Phillips screw driver
Phillips screwdriver
Phillips screwdriver PH2.
Projected Light meter (Lux meter).
Security key (Dallas iButton®).
Set of cutting pliers.
Set of pliers.
Set of universal pliers.
Slide caliper.
T10 Torx screwdriver.
Torque Allen key
Torque Allen key.
Torque wrench 10 mm
Torque wrench with 22 mm hexagon socket.
Torque wrench with a 10 mm hexagon socket.
Torque wrench with a 10mm hexagon socket.
Torque wrench with a 2,5 mm Allen socket.
Torque wrench with a 2.5mm Allen socket.
Torque wrench with a 22 mm hexagon socket.
Torque wrench with a 22mm hexagon socket.
Torque wrench with a 5 mm Allen socket.
Torque wrench with a 5mm Allen socket.
Torque wrench with a 8mm Allen socket.
Torx screwdriver T10
Two 22 mm open-end wrenches.
Two open-end wrenches of 22mm.
TX10 Torx screwdriver.
Universal pliers
Wrench 10 mm

# Index

## Numbers/Symbols


3D color wheel
  Cleaning  559


## A


Access power connection  44
Activate
  LUT-SCC file  273
Adaptation bushing  76
Adapters
  Anode  76
Adaptors
  Cathode  76
Adjust
  Cold Mirror  205
  Fold Mirror  255, 257
  Light Pipe Zoom Lens  259–260
  Notch Filter  261, 263
  Rod  219, 221
Anode
  Fan  433, 435
Authorization
  Security warning
    Clear  398


## B


Back focal length
  Adjustment  318
Block diagrams  24
Button assembly
  Install  373
  Remove  370
Button module  376
Button unit
  Signal back plane
    Replace  384


## C


Card cage
  Cinema controller  357
  Cleaning  564
  Fan controller  351
  HD-SDI  355
  ICP  352
  ICP-D  353
  Link decryptor  355–356
  Quad 3G/SDI  356
  SMPS  359
Card Cage  349
  Fan  422
  Introduction  350
Card Cage board
  Replace  360
Cathode
  Fan  438
Cinema controller  357
Cinema Controller
  Battery
    Replacement  364
Clean
  Cold Mirror  209
  Notch Filter  265
  Prism  266
  Reflector  150
  UV blocker  149
Cleaning
  Card cage  564
  Dust filters  570
  Exterior  577
  External covers  569
  Lamp house
    Reflector  557
    UV blocker  557
  Lens  328, 563
  Light processor
    Compartment  562
  LPS  568
  Non optical components  564
  Optical path  556

3D color wheel 559
Cleaning order 556
Cold mirror 558
Compartment 558
Notch filter 560
Prism outlet 561
Rod inlet 559
Outside lamp house 557
Port hole 563
Procedure 557
Products 555
Projector 553
Pump assembly 567
Purpose 554
Reflector 195
SPG fan assembly 566
Tips 555
Tools 555
UV blocker 195
Cold Mirror 197
Adjust 205
Clean 209
Fan 430
Replace 199, 202
Convention
Orientation 18
Convergence
Controls 249
Green on blue 252
Red on blue 251
Cooling circuit.
Introduction 283
Cooling liquid
Safety precautions 15
Covers
Front cover
Installation 590
Removal 586
Input cover
Installation 592
Removal 584
Installation 579
Lamp cover
Installation 593
Removal 581
Rear cover
Installation 595
Removal 583
Removal 579
Side cover
Installation 596
Remove 588


## D


DC update companion
Launch 400
Diagnostics 230, 285
Download
LUT-SCC file 276
Dowser 272
Draining liquid cooling 287
Dust filter 573
Bottom
Clean 576
Remove 576
Front
Clean 574
Remove 574


## E


Error code name
++12v - voltage high 538
++12v - voltage low 538
+24v - voltage high 536
+24v - voltage low 537
+24v - voltage too low 537
3d module - change status failed due to communication error 513
3d module - change status failed due to dolby 3d key-server lock 513
3d module - color wheel in failed 514
3d module - color wheel out failed 515
3d module - color wheel speed not ok (not locked) 517
3d module - color wheel spin failed 514
3d module - color wheel temperature too high 516
3d module - read status failed 512
5043 446
air flow - no air flow 540
ambient - temperature high 464
ambient - temperature sensor open 464
ambient - temperature sensor short 464
ambient - temperature too high 463
block blue - temperature high 532
block blue - temperature sensor open 533
block blue - temperature sensor short 534
block blue - temperature too high 532
block front - temperature high 526
block front - temperature sensor open 526
block front - temperature sensor short 527
block front - temperature too high 525
block green - temperature high 530
block green - temperature sensor open 531
block green - temperature sensor short 532
block green - temperature too high 530
block red - temperature high 528
block red - temperature sensor open 529
block red - temperature too high 527
block red- temperature sensor short 529
cold mirror fan - speed too low 445
cold mirror fan - voltage high 477
cold mirror fan - voltage low 477
cold mirror fan - voltage too low 477
dmd - temperature hardware protection warning 536
dmd blue - temperature high 464
dmd blue - temperature low 466
dmd blue - temperature sensor open 466
dmd blue - temperature sensor short 466
dmd blue - temperature too high 464
dmd blue front - temperature high 524
dmd blue front - temperature low 525
dmd blue front - temperature sensor open 525

dmd blue front - temperature sensor short 525
dmd blue front - temperature too high 524
dmd green - temperature high 467
dmd green - temperature low 468
dmd green - temperature sensor open 469
dmd green - temperature sensor short 469
dmd green - temperature too high 467
dmd green front - temperature high 522
dmd green front - temperature low 523
dmd green front - temperature sensor open 523
dmd green front - temperature sensor short 524
dmd green front - temperature too high 522
dmd red - temperature high 473
dmd red - temperature low 474
dmd red - temperature sensor open 475
dmd red - temperature sensor short 475
dmd red - temperature too high 473
dmd red fan - speed low 461–463
dmd red front - temperature high 520
dmd red front - temperature low 521
dmd red front - temperature sensor open 522
dmd red front - temperature sensor short 522
dmd red front - temperature too high 520
dolby 3d key-server - read status failed 512
dolby 3d key-server - status = locked 512
dowser - set dowser open failed 496
electronics fan 1 (top side) - speed low 452
electronics fan 1 (top side) - voltage high 490
electronics fan 1 (top side) - voltage low 490
electronics fan 1 (top side) - voltage too low 490
electronics fan 2 (bottom side) - speed low 452
electronics fan 2 (bottom side) - voltage high 491
electronics fan 2 (bottom side) - voltage low 492
electronics fan 2 (bottom side) - voltage too low 492
engine air - temperature high 535
engine air - temperature sensor open 535
engine air - temperature sensor short 536
engine air - temperature too high 535
engine fan - speed low 446
engine fan - voltage high 478
engine fan - voltage low 479
engine fan - voltage too low 479
engine switch - not ok 453
fcb - force lps/lamp off 472
heat exchanger fan - speed low 447
heat exchanger fan - voltage high 480
heat exchanger fan - voltage low 480
heat exchanger fan - voltage too low 480
heat exchanger fan 2 (back side) - speed low 541
heat exchanger fan 2 (back side) - voltage high 541
heat exchanger fan 2 (back side) - voltage low 542
heat exchanger fan 2 (back side) - voltage too low 542
icp fan - speed low 543
icp fan - voltage high 544
icp fan - voltage low 545
imb - logical marriage tamper event 511
imb - no communication 509
imb - physical marriage tamper event 511
imb - service door tamper event 509
lamp - no communication 442
lamp - temperature high 470
lamp - temperature sensor open 470
lamp - temperature sensor short 472
lamp - temperature too high 470
lamp anode fan - speed low 448
lamp anode fan - speed too low 448
lamp anode fan - voltage high 482
lamp anode fan - voltage low 482
lamp anode fan - voltage too low 482
lamp cathode fan - speed low 450
lamp cathode fan - speed too low 449
lamp cathode fan - voltage high 483
lamp cathode fan - voltage low 484
lamp cathode fan - voltage too low 484
lamp power supplies - at least one lamp power supply could not be detected 494
lamp power supplies - communication failed 443
lamp power supplies - communication failed with at least one lamp power supply 494
lamp power supplies - lamp is on, but at least one lamp power supply is off 494
lamp power supplies - lamp is on, but smps is off 493
lamp power supplies - zero lamp power supplies detected 493
lamp run time - exceeds maximum 496
lamp run time - read failed 495
lamp run time - read limits failed 496
lamp run time - warning 496
lens - no lens parameter file has been activated 548
lens focus position - requested target not reached 457
lens horizontal shift position - requested target not reached 458
lens motors - voltage too low 539
lens vertical shift position - requested target not reached 460
lens zoom position - requested target not reached 456
light pipe - temperature high 517
light pipe - temperature sensor open 518
light pipe - temperature sensor short 519
light pipe - temperature too high 517
light sensor - no communication 442
light source - not connected 454
light source - Switching on the light source failed 495
light source - The light source was switched off due to an error 495
maintenance - maintenance required 548
pfc heatsink - temperature high 473
pump - refill mode is on 444
pump - speed low 455
pump - speed too low 455
pump - voltage high 486
pump - voltage low 487
pump - voltage too low 487
smps fan - voltage high 485
smps fan - voltage low 485
smps fan - voltage too low 485

smps fan 1 (left side) - speed low 450
smps fan 2(right side) - speed low 451
smps primary heatsink - temperature high 476
smps secundary heatsink - temperature high 476
smps secundary heatsink - temperature sensor open 476
smps secundary heatsink - temperature sensor short 476
spg fan - speed low 546
spg fan - voltage high 546
spg fan - voltage low 547
spg fan - voltage too low 547
system - read projector identification failed 445
tec - voltage high 488
tec - voltage low 489
ti-boards - system status = fail 497
ti-icp - certificate error 504
ti-icp - icp board not detected 505
ti-icp - key error 504
ti-icp - read satellite info failed 501
ti-icp - read system status failed 500
ti-icp - satellite firmware mismatch 501
ti-icp - self test = fail 503
ti-link-decryptor - logical marriage tamper event 507
ti-link-decryptor - no communication 505
ti-link-decryptor - physical marriage tamper event 508
ti-link-decryptor - read system status failed 509
ti-link-decryptor - security log is almost full 508
ti-link-decryptor - security log is full 508
ti-link-decryptor - security tamper event 507
ti-link-decryptor - service door tamper event 499
ti-link-decryptor - system error 505

Error code number

5003 442
5004 442
5005 443
5010 444
5020 445
5042 445
5053 446
5063 447
5072 448
5073 448
5082 449
5083 450
5103 450
5113 451
5143 452
5153 452
5160 453
5180 454
5212 455
5213 455
5230 456
5231 457
5232 458
5233 460
5253 461
5263 462
5273 463
5280 463
5281 464
5284 464
5285 464
5290 464
5291 464
5293 466
5294 466
5295 466
5300 467
5301 467
5303 468
5304 469
5305 469
5310 470
5311 470
5314 470
5315 472
5320 472
5331 473
5340 473
5341 473
5343 474
5344 475
5345 475
5351 476
5361 476
5364 476
5365 476
5431 477
5432 477
5433 477
5441 478
5442 479
5443 479
5451 480
5452 480
5453 480
5461 482
5462 482
5463 482
5471 483
5472 484
5473 484
5491 485
5492 485
5493 485
5531 486
5532 487
5533 487
5551 488
5553 489
5611 491
5621 490
5622 490
5623 490
5632 492
5633 492
5640 493
5641 493
5642 494
5643 494
5644 494
5646 495
5647 495
5654 495

5657 496
5658 496
5659 496
5670 496
5800 497
5801 499
5807 500
5812 501
5813 501
5814 503
5815 504
5816 504
5817 505
5830 505
5831 505
5832 507
5833 507
5834 508
5835 508
5836 508
5837 509
5850 509
5851 509
5853 511
5854 511
5880 512
5881 512
5882 512
5884 513
5885 513
5890 514
5891 514
5892 515
5893 516
5894 517
5960 517
5961 517
5964 518
5965 519
5970 520
5971 520
5973 521
5974 522
5975 522
5980 522
5981 522
5983 523
5984 523
5985 524
5990 524
5991 524
5993 525
5994 525
5995 525
6000 525
6001 526
6004 526
6005 527
6010 527
6011 528
6014 529
6015 529
6020 530
6021 530
6024 531
6025 532
6030 532
6031 532
6034 533
6035 534
6040 535
6041 535
6044 535
6045 536
6050 536
6061 536
6062 537
6063 537
6071 538
6073 538
6082 539
6091 540
6103 541
6111 541
6112 542
6113 542
6123 543
6131 544
6133 545
6183 546
6191 546
6192 547
6193 547
6200 548
6210 548
cold mirror fan - speed low 446
Ethernet 357
Exterior
Cleaning 577
External covers
Cleaning 569

## F

Fan controller 351
Fan Light Processor
Replace 424
Fans
Replace 421
File manager
Activate
LUT-SCC file 279
File upload 278
Filling liquid cooling 290
Filters 19
Fixate
Lens Holder front plate 326
Focus 316
Stepper motor
Replace 341
Fold Mirror
Adjust 255, 257

## G

General 17

General Purpose I/O 358, 598
GPIO 358, 598

## H

Hazardous Chemicals 15
HD-SDI board 355
Heat Exchanger
  Fan 429
  Replace 305
Horizontal Shift
  Stepper motor
    Replace 338
Housing 19

## I

ICMP software update 403
ICP
  Fan 440
ICP board 352
ICP software update 407
ICP-D board 353
Inlet filters 19
Input & communication unit
  Top cover 248
Input formats 603–604
Install
  Button assembly 373
  Heat Exchanger 305
  Lamp House 119, 177
  Light Sensor 267–268
  Liquid Cooling assembly 294
  LPS 58
  Pump
    NRD 303
    RD 297
  Pump (complete)
    New model 299
  Rod 217
  SPG 66
  Touch Panel 418
  UV blocker 131
Installation
  Access power connection 44
  Lamp
    Manual lamp house 94, 108, 171
    Motorized lamp house 114, 166
  Lamp alignment MLH
    Automatic 124
    Manual 126
  Power connection 47
  Power input setup 45
  Power loop through 51
  Power net 49
  UPS connection 52
Integrated Cinema Processor 352
Integrated Cinema Processor - Direct 353
Integration Rod 211
  Diagnostic 214–215
  Introduction 212
Interconnection diagram 27
Introduction 198, 227
  Card Cage 350
  Integration Rod 212
  Lamp 71, 153
  Lamp House 71, 153
  Lens 308
  Lens holder 308
  Liquid cooling 283
  Power Rack 42
  SCC file 274
  SPG 62

## K

Keypad 379, 383

## L

Lamp 69, 151
  Installation
    Manual lamp house 94, 108, 171
    Motorized lamp house 114, 166
  Realignment 143
  Remove
    Lamp House 79
    Manual lamp house 84
    Motorized Lamp House 99, 104, 157, 161
  Reset 120
  Supported 75, 77
  Supported lamps 75, 77
Lamp alignment 120, 179
Lamp alignment MLH
  Automatic 124
  Manual 126
Lamp house 69, 151
  Installation xenon lamp 88
  Lamp reflector
    Replace 186
  Reflector 135
    Second generation 139
  Remove
    Xenon lamp (manual lamp house) 84
  Stepper motor
    Replace 192
  UV blocker
    Replace 182
  Xenon lamp
    Remove (manual lamp house) 84
Lamp House 20
  Install 119, 177
  Lamp
    Remove 79
  Lubricate XYZ mechanism 148, 190
  Reflector
    Clean 150
  Remove 78, 156
    Xenon lamp 104, 157
  Remove lamp 79
  UV blocker
    Clean 149
  Xenon lamp
    Remove 104, 157

Lamp info module
Replace 127, 180
Lamp parameters 120
Resetting 179
Lamp runtime 74, 155
Lens
Back focal length 318
Cleaning 328, 563
Focus 316
Installation 312
Remove 315
Scheimpflug 322
Selection 311
Shift 316
Zoom 316
Lens Calculator 311
Lens holder 307
Lens Holder 20
Front plate 326
Lens Rubber
kit 344, 347
Remove 329, 332
Lens Rubber
kit 344, 347
Lens Holder 344, 347
Lenses 307
Available 309
License 353
Light pipe
Lens and aperture swap 239
Light Pipe Zoom Lens
Adjust 259–260
Light processor
Electrical connections 246
Disconnect 234
Installation 242
Removal 236
Top cover
Mount 253
Top cover removal 233
Light Processor 20, 225
Fan 424
Light Sensor 267–268
Link decryptor 355–356
Replace 366
Link decryptor software update 410
Liquid cooling 281
Introduction 283
Location
Main components 19
LPS
Cleaning 568
Diagnostic 53
LUT-SCC file
Activate 273
Download 276

## M

Main components 19
Maintenance
1 year 35
3 month 34
4 year 39
Lamp change 33
Lubricate XYZ mechanism 148, 190
Software upgrade
ICMP software 403
ICP software 407
Launch DC update companion 400
Link decryptor 410
Log file 413
Projector software 403
Touch panel software 403
Maintenance program 31
1 Month 32
Manual lamp house
Install lamp 94, 108, 171
Lamp
Install 94, 108, 171
Remove 84
Motorized lamp house
Install lamp 114, 166
Lamp
Install 114, 166
Motorized Lamp House
Lamp
Remove 99, 161
Remove
Lamp 104, 157
Remove lamp 99, 161

## N

Notch filter
Cleaning 560
Notch Filter
Adjust 261, 263
Clean 265
Replace 269, 271

## O

Obtain
Serial Number 275
Orientation
Convention 18

## P

Pin configuration
Communication ports 600
Inputs 602
Pin configurations 597
Port hole
Cleaning 563
Position
Touch panel 420
Power connection
Installation 47
Power input setup 45
Power loop through
Installation 51
Power Rack 41
Power wiring 28

Prism
Clean 266
Prism outlet
Cleaning 561
Projector software update 403
Projector status light
About 23
Pump
Replace 297, 299, 303
Pump assembly
Cleaning 567

## Q

Quad 3G/SDI 356

## R

Realignment
Lamp 143
Reflector
Clean 150
Cleaning 195, 557
Replace 135
Second generation 139
Remove
Button assembly 370
Heat Exchanger 305
Lamp
Lamp House 79
Motorized Lamp House 99, 161
Lamp House 78, 156
Lens Holder 329, 332
Light Sensor 267–268
Liquid Cooling assembly 291
LPS 56
Pump
NRD 303
RD 297
Pump (complete) 299
Rod 216
SPG 64
Replace
Anode fan 433, 435
Battery
Cinema Controller 364
Card Cage board 360
Cathode fan 438
Cold Mirror 199, 202
Cold Mirror fan 430
Dowser 272
Driver board
Focus stepper 343
Fan Card Cage 422
Fan Heat Exchanger 429
Fan Light Processor 424
Fans 421
Focus
Stepper motor 341
Formatter fan 427
Heat Exchanger 305
Horizontal Shift
Stepper motor 338
ICP fan 440
Lamp info module 127, 180
Light Sensor 267–268
Pump
NRD 303
RD 297
Pump (complete)
New model 299
Reflector 135
Second generation 139
RTC battery
ICMP board 362
Shutter 272
SMPS 368
SPG fan 430
Status Light 397
Stepper 145
Vertical Shift
Stepper motor 335
Replace Notch Filter 269, 271
replacement 376, 379, 383
Reset
Lamp 120
Rod
Adjust 219, 221
Diagnostic 214–215
Install 217
Remove 216
Rod inlet
Cleaning 559
RS232 358

## S

Safety 11
Hazardous Chemicals 15
Instructions 12
Safety Data Sheet (SDS) 15
Safety Data Sheet (SDS) 15
Safety precautions
Cooling liquid 15
SCC file
Introduction 274
Scheimpflug 322
Sealed compartment
Close 254
Open 231
second generation Keypad 376, 379, 383
Serial communication 358
Shift 316
Shutter 272
Signal back plane
Replace 384
SMPS 359
Replace 368
Software update
DC update companion 399
ICMP software 403
ICP software 407
Link decryptor 410
Log file 413
Projector software 403

Touch panel software 403
Via Communicator 399
Software upgrade
DC update companion
Launch 400
Spare parts 30
SPG 20, 61
Fan 430
Install 66
Introduction 62
Remove 64
Troubleshooting 63
SPG fan assembly
Cleaning 566
Status light
About 23
Status Light
Replace 397
Supported
Lamps 75, 77

## T

Touch panel 415
Position 420
Touch Panel
Install 418
Introduction 416
Touch panel software update 403
Trouble shooting 441
Checklist 442
Troubleshooting
Log files 549
SPG 63

## U

UPS connection
Installation 52
UV blocker
Clean 149
Cleaning 195, 557
Replace 182

## V

Vertical Shift
Stepper motor
Replace 335

## Z

Zoom 316